CONTRACTOR REPORT

C [redacted]

SAND87-8177 -2
UC-62c
Unlimited Release

Solar Fuels and Chemicals System Design Study - Production and Regeneration of Activated Carbon Final Report
Volume 2 - Conceptual Design

Babcock and Wilcox
A McDermott Company
Nuclear Equipment Division
Barberton, Ohio 44203

Prepared by Sandia National Laboratories, Albuquerque, New Mexico 87185 and Livermore, California 94550 for the United States Department of Energy under Contract 91-4648B.

Printed March 1987

Printed in the United States of America
Available from
National Technical Information Service
5285 Port Royal Road
Springfield, VA 22161

NTIS price codes
Printed copy: A15
Microfiche copy: A01

UC-62c

SAND87-8177
Unlimited Release
Printed March 1987

SOLAR FUELS AND CHEMICALS SYSTEM DESIGN STUDY - PRODUCTION AND REGENERATION OF ACTIVATED CARBON

FINAL REPORT

VOLUME 2 - CONCEPTUAL DESIGN

Babcock and Wilcox
A McDermott Company
Nuclear Equipment Division
Barberton, Ohio 44203

Prepared for Sandia National Laboratories
under Contract No. 91-4648B

ABSTRACT

This report describes the conceptual design of a solar thermal central receiver system that both produces activated carbon from coal and regenerates spent activated carbon. The system design uses molten carbonate salt that is heated in the receiver to transfer heat to an activated carbon plant located near the base of the receiver tower. Capital and operating cost estimates are described, and market and economic analyses are presented to assess the attractiveness of the proposed system. Technical uncertainties are identified as the basis for a development plan to bring the proposed system to maturity.

SOLAR THERMAL TECHNOLOGY
FOREWORD

The research and development described in this document was conducted within the U.S. Department of Energy's (DOE) Solar Thermal Technology Program. The goal of the Solar Thermal Technology Program is to advance the engineering and scientific understanding of solar thermal technology, and to establish the technology base from which private industry can develop solar thermal power production options for introduction into the competitive energy market.

Solar thermal technology concentrates solar radiation by means of tracking mirrors or lenses onto a receiver where the solar energy is absorbed as heat and converted into electricity or incorporated into products as process heat. The two primary solar thermal technologies, central receivers and distributed receivers, employ various point and line-focus optics to concentrate sunlight. Current central receiver systems use fields of heliostats (two-axis tracking mirrors) to focus the sun's radiant energy onto a single tower-mounted receiver. Parabolic dishes up to 17 meters in diameter track the sun in two axes and use mirrors or Fresnel lenses to focus radiant energy onto a receiver. Troughs and bowls are line-focus tracking reflectors that concentrate sunlight onto receiver tubes along their focal lines. Concentrating collector modules can be used alone or in a multi-module system. The concentrated radiant energy absorbed by the solar thermal receiver is transported to the conversion process by a circulating working fluid. Receiver temperatures range from 100^{o}C in low-temperature troughs to over 1500^{o}C in dish and central receiver systems.

The Solar Thermal Technology Program is directing efforts to advance and improve promising system concepts through the research and development of solar thermal materials, components, and subsystems, and the testing and performance evaluation of subsystems and systems. These efforts are carried out through the technical direction of DOE and its network of national laboratories who work with private industry. Together they have established a comprehensive, goal directed program to improve performance and provide technically proven options for eventual incorporation into the Nation's energy supply.

To be successful in contributing to an adequate national energy supply at reasonable cost, solar thermal energy must eventually be economically competitive with a variety of other energy sources. Component and system-level performance targets have been developed as quantitative program goals. The performance targets are used in planning research and development activities, measuring progress, assessing alternative technology options, and making optimal component developments. These targets will be pursued vigorously to insure a successful program.

The production of fuels and chemicals using solar thermal energy would broaden the Program's impact on fossil fuel displacement and establish the full potential of solar thermal technology. This report describes the conceptual design of a solar thermal central receiver plant that both produces activated carbon from coal and regenerates spent activated carbon. Technology development needs are described, and market and economic analyses are presented.

Information in this report should be considered preliminary since the work was carried only through the conceptual stage. A key factor in sizing many of the components is the corrosion rates for the materials selected. Corrosion data for some of the materials specified are limited and subject to interpretation.

TABLE OF CONTENTS

Page

Volume 1

Volume 2

TABLE OF CONTENTS

TABLE OF CONTENTS

Volume 3

LIST OF TABLES

Page

Volume 1

Volume 2

LIST OF TABLES

LIST OF TABLES

LIST OF FIGURES

LIST OF FIGURES

LIST OF FIGURES

1.0 INTRODUCTION

This report describes the results of a study headed by the Babcock & Wilcox Company, under contract with Sandia National Laboratories - Livermore (SNLL), to conceptually design and evaluate a facility for the production of activated carbon using energy supplied by a solar central receiver. This work was envisioned as the first phase of a multi-phase program that could ultimately lead to the commercialization of the process. It supports the principal objective of Sandia's Solar Fuels and Chemicals Program of identifying and developing new applications for solar central receiver technology.

1.1 Objective of the Study

The specific objectives of this study were to uncover the design challenges and development requirements involved in defining a solar fuels and chemicals plant and to establish the technical and economic feasibility of the proposed concept. In support of this objective, the conceptual design and operating strategies were developed, upon which capital and operating cost estimates were based. A market forecast and a revenue projection were prepared. Technical uncertainties were identified as the basis for a development plan to bring the proposed concept to maturity.

A dual-purpose process involving the production of activated carbon from coal and the regeneration of spent activated carbon was selected. The regeneration portion of the process will be partially fired by natural gas to reduce operating temperature demands on the receiver. In addition, the process will provide for the cogeneration of electric power. This process was chosen after review of numerous processes, including coal gasification, steam reforming of methane to produce ammonia, and synthesis of ethylene from ethanol. The activated carbon process was selected because it is energy intensive, thereby offering potential for efficient use of solar energy. The basic technology of the production and the regeneration processes has been developed, which provides a base for any technological changes to the processes required as a result of incorporating solar energy into the design. The process generates valuable by-product gas and tar which can be used as fuel for the process, or feedstock for other chemical processes, or can be sold to generate additional revenue.

1.2 Project Plan

During the course of the study, system, subsystem, and component design requirements were developed; performance analyses completed; operation and control strategies established; capital and operating cost estimates and revenue projections made; technical uncertainties identified; and a development plan devised. Reports, drawings, and other technical documents were prepared. The effort was organized into the following four technical tasks:

Task 2 - Process Optimization
Task 3 - Facility Design
Task 4 - Technological Uncertainties
Task 5 - Cost and Economic Incentives

Task 2 - Process Optimization

The chemical process selected for this study was refined, and its important design characteristics established. This work included:

a. Definition of the reaction chemistry.
b. Specification of operating temperatures and pressures.
c. Completion of energy and mass balances.
d. Preparation of a process flow schematic.

The thermal demand and driving temperatures required for the chemical reaction formed the basis for the solar heat transport subsystem and component designs and the collector field arrangement developed during Task 3. The design point receiver thermal rating was determined, and thermal storage inventory was sized.

A conceptual plant layout drawing was prepared. It shows the arrangement of the principal components in each subsystem, and the critical interface points between the subsystems.

Task 3 - Facility Design

Facility design activities were divided into the three subtasks described in the following paragraphs. Upon completion of this task, a Design Requirements document was prepared and submitted to SNLL.

Subtask 3.1 - Component/Subsystem Design

Conceptual designs were developed for the major subsystems and components in the integrated solar/chemical process plant. Specifically:

Solar Heat Transport Subsystem:

a) A conceptual design for the receiver was developed.

- o Materials were selected for the heat absorption surfaces.
- o The heat flux distribution was defined.
- o The heat absorption surface was arranged to promote high thermal efficiency, which is of particular significance for high temperature surfaces where re-radiation and convection losses may be quite large.
- o The thermal-hydraulic characteristics of the circulation system were determined, including sizing of the surge and collection tanks.
- o Important mechanical design features were reviewed.
- o Critical manufacturing issues were investigated.
- o A conceptual design drawing and a material list were prepared.

b) A conceptual design for a two-tank thermal storage system was developed. The tanks were sized and materials selected. Design features, such as cooling jackets, baffles, and/or "internal insulation", required to protect the tank walls and foundation from the high temperature heat transfer fluid were described. A conceptual design drawing and a material list were prepared.

c) Conceptual designs were developed for the fossil fired salt heater, steam generator, and intermediate heat exchanger. Heat transfer surfaces were sized and arranged, materials selected, pressure losses calculated, and important mechanical design features described. Conceptual design drawings and material lists were prepared.

d) Conceptual designs were developed for the solar tower and solar heat transport piping system. Preliminary pumping requirements were established. Material lists and specification sheets were prepared, and engineering sketches made as appropriate.

Collector Field Subsystem:

A preliminary arrangement for the collector field was developed assuming the use of 100m^2 glass/metal heliostats and a direct normal insolation of 950 watts/m^2 at the design point. The collector field requirements depend on the thermal demand of the chemical process and the projected thermal efficiency of the receiver heat absorption surfaces. A layout drawing identifying the overall dimensions of the field and number of heliostats was prepared.

Chemical Process Subsystem:

Preliminary design requirements were developed for the principal components in the chemical process subsystem. Materials were selected, and flow rates, temperatures, and pressures governing component sizes were defined. Material lists and design specification sheets were prepared.

Subtask 3.2 - System Design

An integrated total system arrangement, combining the collector field, solar heat transport, and chemical process subsystems, was developed. These subsystems were organized to interact effectively so as to promote the most efficient use of the available solar insolation. A design point performance analysis was made. The results of this analysis were presented in the form of a "stairstep" efficiency curve accounting for:

a. Collector field efficiency, based on projected availability of heliostats and losses associated with cosine effects, reflectivity, shading, blocking, attenuation, and spillage.
b. Receiver efficiency, based on reflection, re-radiation, convection, and conduction losses.
c. Chemical process efficiency, based on projected product yields and unrecoverable heat losses in flue gas, by-products, and coolant streams.
d. Power consumption by pumps and other auxiliary equipment.
e. Miscellaneous thermal losses from the thermal storage tanks and piping.

The design point performance calculations were based on a direct normal insolation of 950 watts/m^2. A plant equipment layout drawing, describing the total system arrangement and the major components in the system, was prepared.

Subtask 3.3 - Controls and Operating Strategy

Strategies were described for all modes of normal operation. Included in this evaluation was:

a. Cold startup and shutdown.
b. Normal daytime operation with solar power.
c. Overnight operation with fossil power.

d. Overnight thermal conditioning of the receiver (overnight standby) to prevent excessive heat loss and facilitate morning startup.
e. Startup of receiver from standby.
f. Daily return of receiver to standby for overnight outage.
g. Thermal buffering from storage to reduce effects of cloud transients on the chemical process.

Requirements were established for controlling and integrating the chemical process and solar heat transport subsystems, consistent with the normal operating strategies described above. Control schemes were defined for:

a. Controlling heat input and limiting temperature swings in the chemical reaction furnaces to maintain product yield and quality.
b. Modulating receiver flow rate, as required by heat flux variations, to limit fluid and material temperatures within prescribed limits.
c. Implementing fossil energy during overnight outages or other outages exceeding the capacity of the thermal storage tank.
d. Employing thermal buffering from storage to mitigate the effects of cloud transients.
e. Regulating steam generation to satisfy process demand.

In addition, special controls required for emergency safeguards were described. A preliminary Piping and Instrumentation (P&I) diagram was prepared.

The annual solar contribution was projected. The solar capacity factor was determined, the total annual solar energy produced was predicted, and net energy, after allowance for forced and planned maintenance outages, was estimated.

Task 4 - Technological Uncertainties

The technical maturity of the chemical process and solar plant designs was assessed. Technical deficiencies or uncertainties were identified, and plans for resolution of these weaknesses devised. The issues addressed included:

a. Selection of component materials and definition of material properties.

b. Evaluation of control strategy to maximize process efficiency and economy.

c. Development of fabrication methods.

A development plan was prepared to resolve design, materials, fabrication, operation, and performance uncertainties through analysis, laboratory testing, and/or prototypical testing.

The development plan identifies the specific work to be accomplished, and projected schedule. Budgetary cost estimates were prepared as appropriate.

Task 5 - Cost and Economic Incentives

Capital and operating cost estimates were prepared based on standards data, actual costs determined from previous contracts, vendor quotations, and catalog prices, where available. Capital costs included:

a. Shop fabrication (material and labor) and/or procurement costs for major components, such as:
   - Solar receiver
   - Chemical reaction furnaces and balance of chemical plant components
   - Collector field
   - Thermal storage tanks
   - Steam generator
   - Fossil fired salt heater
   - Piping, valves, and pumps

b. Construction costs, including site preparation, erection of components (including solar tower), buildings, construction management, and field engineering.

c. Procurement and installation of controls and instrumentation.

d. Electrical equipment.

e. Component and system design engineering.

Operating expenses consist of the cost of feedstocks and other consumable materials, and the cost of supervision and labor for plant operation and maintenance.

Historic market trends were examined, and a market forecast and revenue projections made for the activated carbon as well as other saleable by-products of the process. Factors considered included:

a. Market size and life.
b. Geographic location of markets.
c. Availability and proximity of raw material to the plant site.
d. Product distribution costs.
e. Competitive processes.
f. Alternative technologies and products.
g. Environmental and political issues.
h. Economic conditions.

Based on the market forecast and the capital and operating cost estimate, financial evaluations of the plant were made.

A financial evaluation was also made assuming fossil fuels, rather than solar, provided energy to the process.

1.3 Project Organization

1.3.1 Project Team

The project team consisted of Babcock & Wilcox, the Chemicals Group of Olin Corporation, and Black & Veatch, Engineers-Architects. Babcock & Wilcox accepts research and development contracts through its Contract Research Division. Olin Corporation, an industrial chemical supplier, provided the chemical process design and chemical process economic evaluation. Black & Veatch, an architect/engineering firm well-established in the solar industry, sized the baseline collector field and provided the chemical plant layout. Support to the project in the areas of controls and ceramics was provided by B&W's Lynchburg Research Center. Babcock & Wilcox provided the overall economic evaluation of the project. The project organization is illustrated in Figure 1-1.

Project Organization

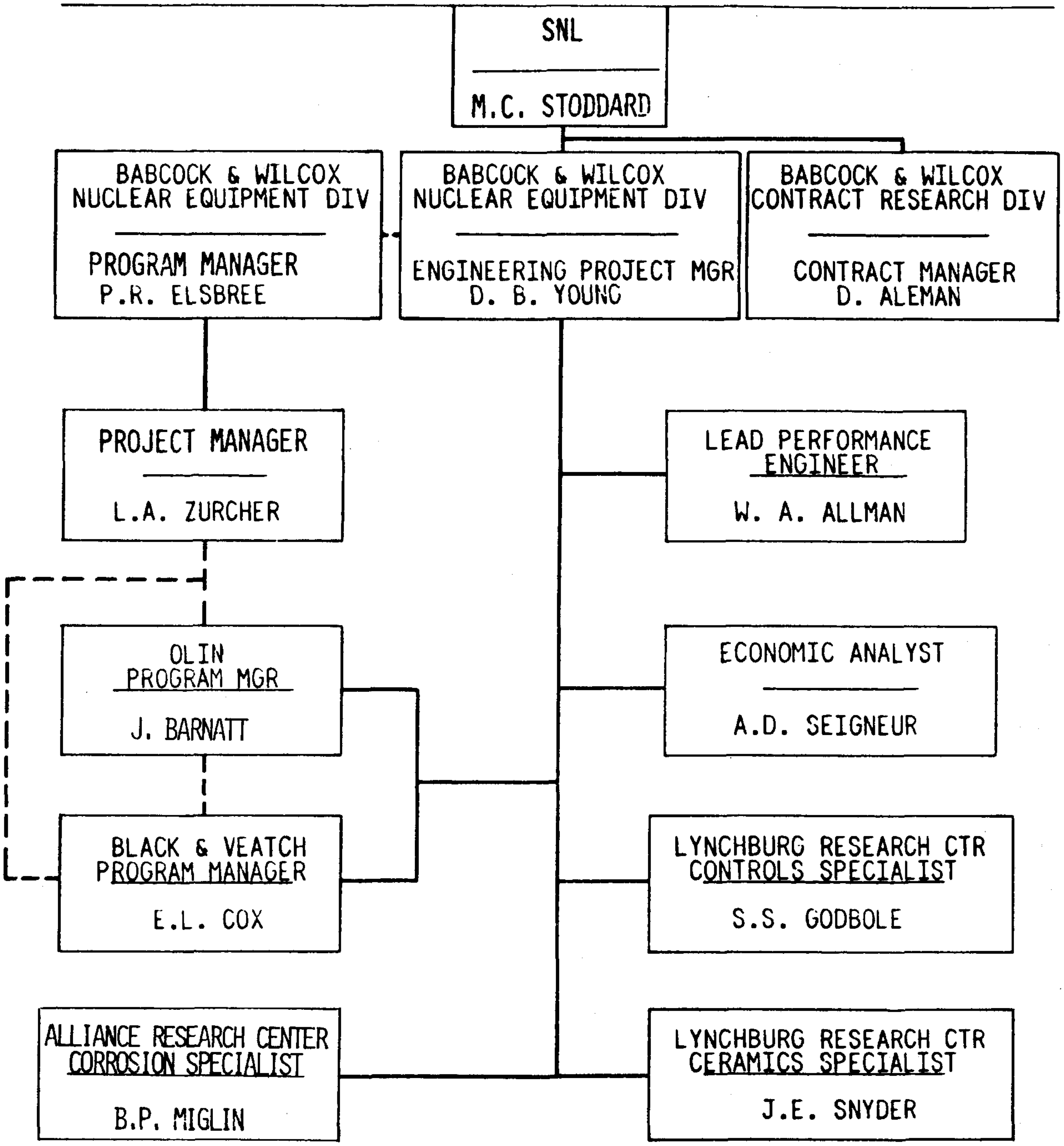

Figure 1-1

1.3.2 Team Member Responsibilities

Subcontractors to the Babcock & Wilcox Company for this program were the Chemicals Group of Olin Corporation and Black & Veatch, Engineers-Architects. The specific responsibilities of each team member are described in Table 1-1.

Table 1-1 Project Responsibilities

Babcock & Wilcox Company

- Program management and management plan
- Integration of chemical process in solar plant
- Conceptual design of major solar heat transport components
- Design point system performance analysis
- Controls requirements for solar heat transport subsystem and integrated total system
- Total plant operations strategy
- Solar technology development needs
- Development plan
- Fabrication cost estimates for solar heat transport components
- Plant economic assessment
- Reports and oral reviews

Olin Corporation

- Characterization of chemical process
- Preliminary design requirements for chemical process components
- Design point chemical process performance analysis
- Controls requirements for chemical process subsystem
- Chemical plant operations strategy
- Chemical technology development needs
- Cost estimates for operation and maintenance
- Market forecast

Black & Veatch Consulting Engineers

- Collector field layout
- Conceptual design of solar tower and piping system
- Specifications and material lists for chemical plant components
- Plant equipment layout and P&I diagram
- Procurement/construction cost estimates for collector field, solar tower and piping, chemical plant components, control system, and civil work

2.0 SYSTEM DESCRIPTION

2.1 An Overview

One of the major objectives of the Solar Fuels and Chemicals Design Study was to complete a conceptual design of a facility for the production of fuels and/or chemicals in which a significant portion of the consumed energy is supplied by a solar receiver. Completion of the system design supported the additional major objectives of performing an economic evaluation of the process and of identifying the technological uncertainties of the design and the plans to resolve those uncertainties.

A dual-purpose chemical process involving the production of activated carbon from coal feedstock and the regeneration of spent activated carbon was selected on the basis of several factors. The process was energy intensive, thereby offering potential for efficient use of solar energy. The basic technology of the production and the regeneration processes has been developed, which provides a base for any technological changes to the processes required as a result of incorporating solar energy into the design. The process generates valuable by-product gas and tar which can be used as fuel for the process, or feedstock for other chemical processes, or can be sold to generate additional revenue.

Energy input to the chemical process is provided by an intermediate heat transfer fluid, molten carbonate salt, to transport energy from the solar heat transport subsystem to the chemical process subsystem. The solar heat transport subsystem provides energy input to the carbonate salt on a 24 hour-a-day basis through the use of either a solar central receiver or a fossil fired salt heater. During periods of receiver operation, the thermal storage tanks decouple the operation of the chemical process from the receiver operation. This permits continual operation of the chemical process during cloud transients without the need to cycle the operation of the fossil fired salt heater. The steam generator portion of the solar heat transport subsystem uses energy input from the carbonate salt to generate steam both for the production of electrical energy and for the process requirements in the chemical process subsystem. The solar heat transport subsystem is a high temperature process in which broad design and materials technology developments can be applied to a variety of potential programs in addition to the specific chemical process considered in this study.

Solar energy input to the receiver in the thermal heat transport subsystem is provided by the collector field subsystem. The collector field is an array of heliostats designed to direct solar radiation to the north-facing receiver cavity located atop the receiver tower. The collector field, tower, and receiver designs must be integrated into a cost-effective arrangement which satisfies the receiver incident heat flux requirements.

A eutectic carbonate salt (Li_2CO_3-K_2CO_3-Na_2CO_3) was chosen as the intermediate heat transfer fluid. This salt is stable at high temperatures and is characterized by a thermal conductivity which is significantly higher than that for salts commonly used at lower temperatures (for example, nitrate salts). The chief drawback with this carbonate salt is its very aggressive behavior toward both high-alloy steels and ceramic materials at elevated temperatures. Despite this drawback, it was considered, on balance, the best available heat transport medium for the intended service. The important physical properties of this carbonate salt are summarized in Appendix C.

In the initial design of the system, the total energy input requirements of the three chemical process furnaces and the steam generator were provided by the molten carbonate salt. The steam generator was designed to provide only low pressure [0.62 MPa (90 psia)] steam to meet the process requirements of the chemical process. The total heat load of 35.3 MW_t (120.6×10^6 Btu/hr) was supported by carbonate salt flow entering the process at 1149^oC (2100^oF) and leaving the process at 474^oC (886^oF). A basic flow schematic of this initial design is shown on Figure 2-1.

The material initially chosen to contain the molten carbonate salt up to temperatures of 1149^oC (2100^oF) was silicon carbide. This material possesses sufficient strength and thermal shock capabilities for this type of service; however, it was discovered at the onset of the contract that this material's resistance to the corrosive effects of the carbonate salt is very poor. This led to an extensive investigation of candidate materials which had the strength, thermal shock, and corrosion resistant properties sufficient to contain the carbonate salt at the high operating temperatures over the 20 year design life of the plant. The material investigation and selection process is documented in Appendix A.

Initial Chemical Process /Steam Generator Carbonate Salt Flow Diagram

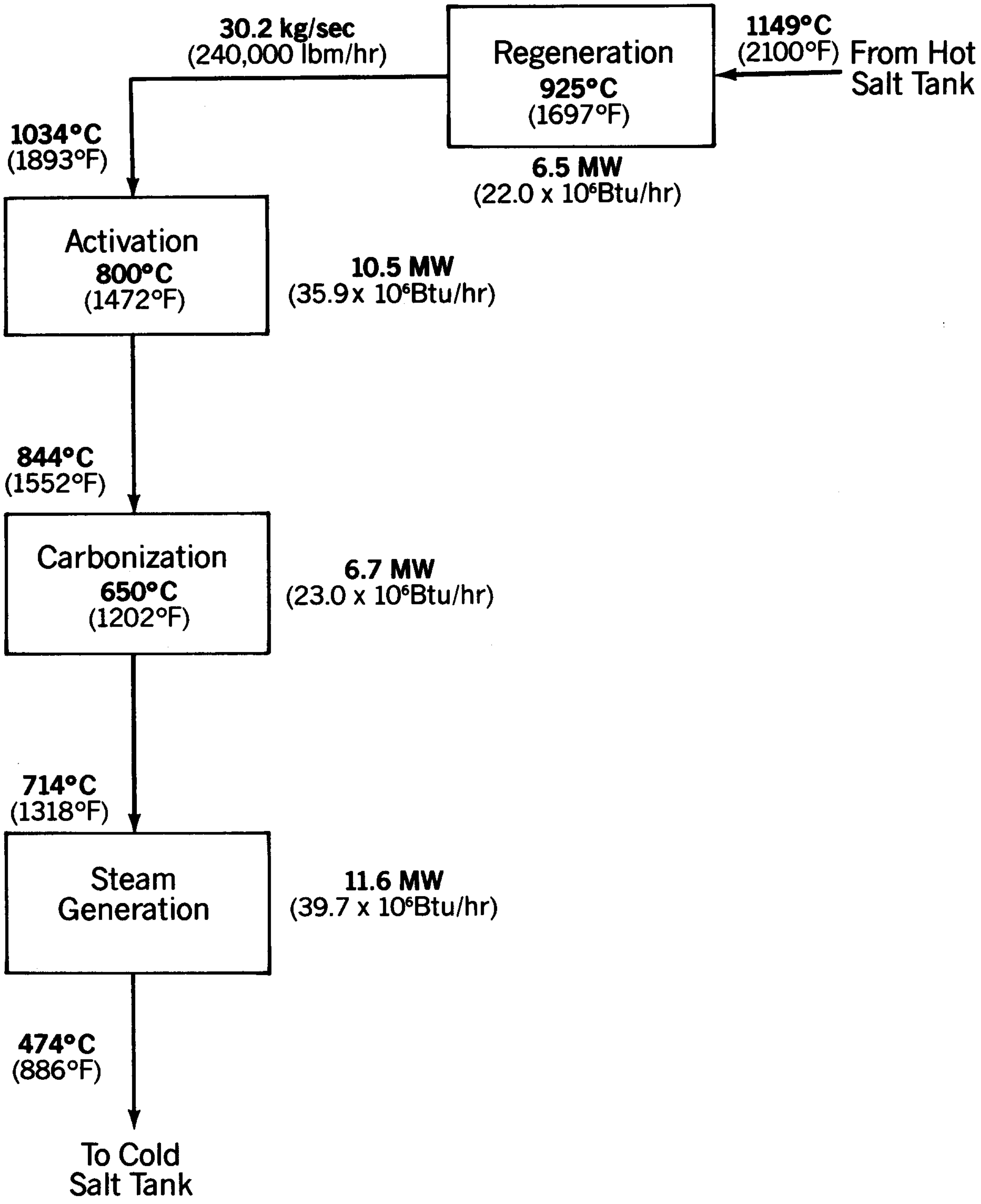

Figure 2-1

No material, either ceramic or metallic, was found which had the required combination of strength and resistance to thermal shock and corrosion at 1149°C (2100°F) for the plant operating life. Based on the information presented in Appendix A, the hot carbonate salt temperature for the process was reduced to 954°C (1750°F) to permit the use of Inconel 600 as a corrosion resistant material in combination with Inconel 617 for the required strength.

The reduction of the hot salt temperature resulted in a change to the energy input method used for the process. Rather than all the energy input being provided by the carbonate salt, a portion of the energy is supplied by fossil fuel. This fossil fuel input is supplied to the portion of the regeneration process which had required the 1149°C (2100°F) salt temperature. In addition, refinements to the chemical process requirements resulted in reduced heat load requirements for the carbonization furnace and for the steam generator. The total salt flow heat load of the process was reduced to 23.1 MW_t (78.8 x 10^6 Btu/hr), supported by salt flow entering the process at 954°C (1750°F) and leaving the process at 672°C (1242°F). Fossil fuel heat load for the regeneration process was 3.6 MW_t (12.4 x 10^6 Btu/hr). A basic salt flow schematic of this revised design is shown on Figure 2-2.

The steam generator subsystem within the solar heat transport subsystem was initially designed to generate the 0.62 MPa, 260°C (90 psia, 500°F) process steam required by the chemical process. Energy is transferred from the molten carbonate salt to a molten nitrate salt loop through the intermediate heat exchanger. The intermediate heat exchanger and the molten nitrate salt loop were provided to reduce temperature differences between the salt and the water/steam in the evaporator and superheater from what those temperature differences would have been had molten carbonate salt been used for direct energy input to the evaporator and superheater. In spite of the intermediate heat exchanger and the molten nitrate salt loop, initial evaluation of the low pressure steam generator still raised concerns for the structural adequacy of the superheater and evaporator due to large temperature differences between the molten nitrate salt and the water/steam. In addition, water/steam temperatures well below the 245°C (473°F) freezing point of the molten nitrate salt raised serious concerns for salt freezing in the heat exchangers. Figure 2-3 shows the salt and water/steam temperatures and the temperature differences for the low pressure steam generator subsystem.

Revised Chemical Process/Steam Generator Carbonate Salt Flow Diagram

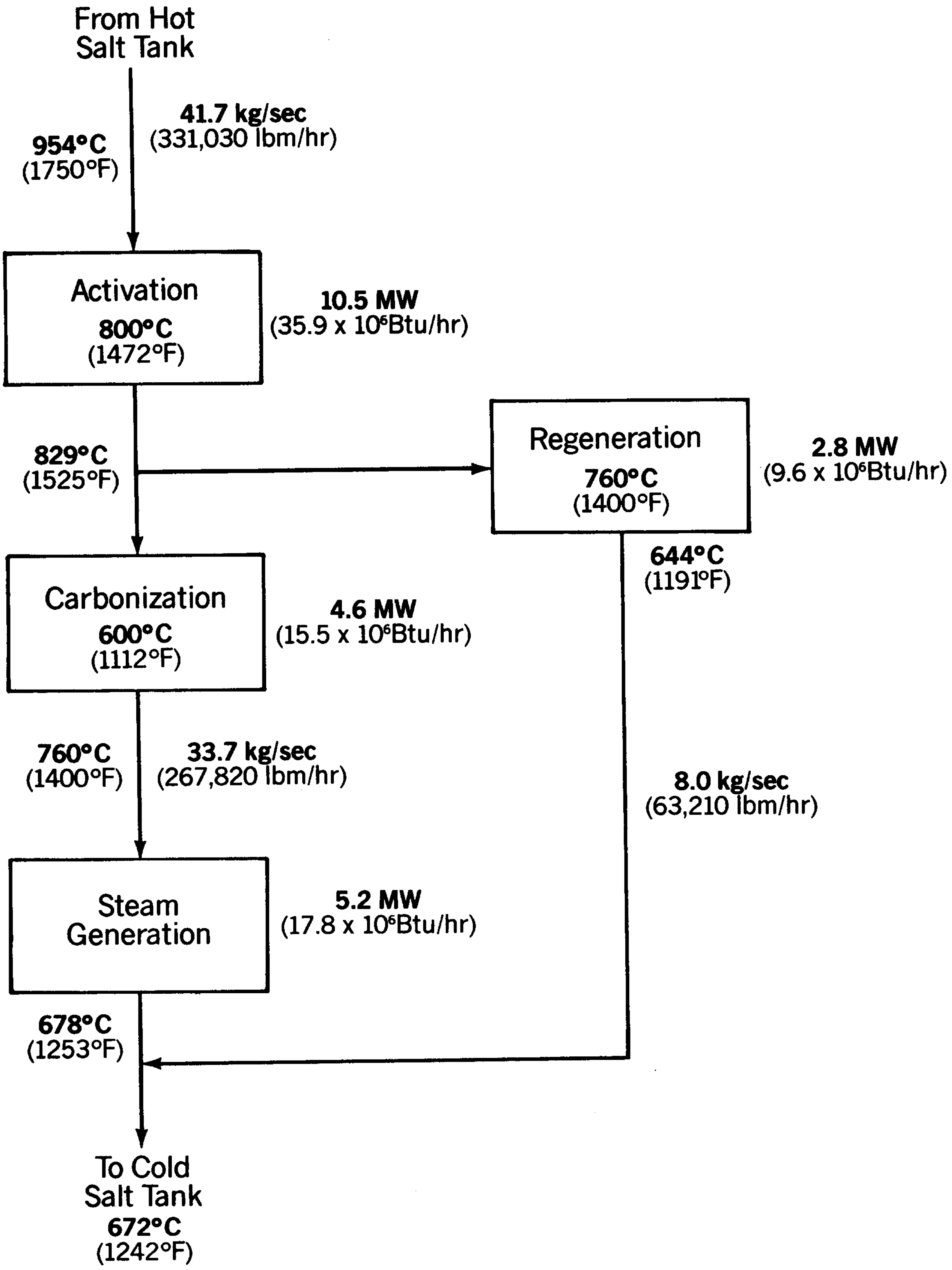

Figure 2-2

To reduce the large temperature differences and to eliminate the salt freezing potential in the steam generator heat exchangers, the steam generator delivery pressure was increased to 7.93 MPa (1150 psia). The increase in pressure resulted in only a marginal increase in steam generator cost, while markedly improving the design of the components. Also, the higher steam pressure supported the addition of cogeneration of electrical power to the system design.

Adding cogeneration of electrical power to the system evolved from the revised carbonate salt heat load requirements (Figure 2-2) which had a cold carbonate salt temperature of 672°C (1242°F) and from the consideration of increasing steam generator delivery pressure to 7.93 MPa (1150 psia). Decreasing the cold carbonate salt temperature to 514°C (957°F) by increasing the steam generator subsystem heat load by 11.9 MW_t (40.5 x 10^6 Btu/hr) allowed the addition of a nominal 3.0 MW_e turbine-generator set to the system. Cogeneration of electricity at this power level provided a very real potential for additional operating revenues through the net export of electrical power. The lower cold carbonate salt temperature reduced the carbonate salt-to-nitrate salt temperature difference in the intermediate heat exchanger and reduced design concerns for other components in the solar heat transport subsystem, such as the cold storage tank, cold salt pumps, piping, and valves. With the addition of cogeneration, the total salt flow heat load of the process was 35.0 MW_t (119.3 x 10^6 Btu/hr). A basic salt flow schematic for the finalized plant design is shown on Figure 2-4; a comparison of carbonate salt heat loads is shown on Table 2-1.

A conceptual layout of the entire solar fuels and chemicals design for the production and regeneration of activated carbon is shown on Figure 2-5. The boundaries of the chemical process, solar heat transport, and collector field subsystems are delineated on this figure as well as the major equipment, the chemical process streams, and the molten salt streams. Detailed discussion of the equipment in each subsystem, the plant site arrangement, and the overall system performance are included in the balance of Section 2.0.

Initial Steam Generator Subsystem Temperatures

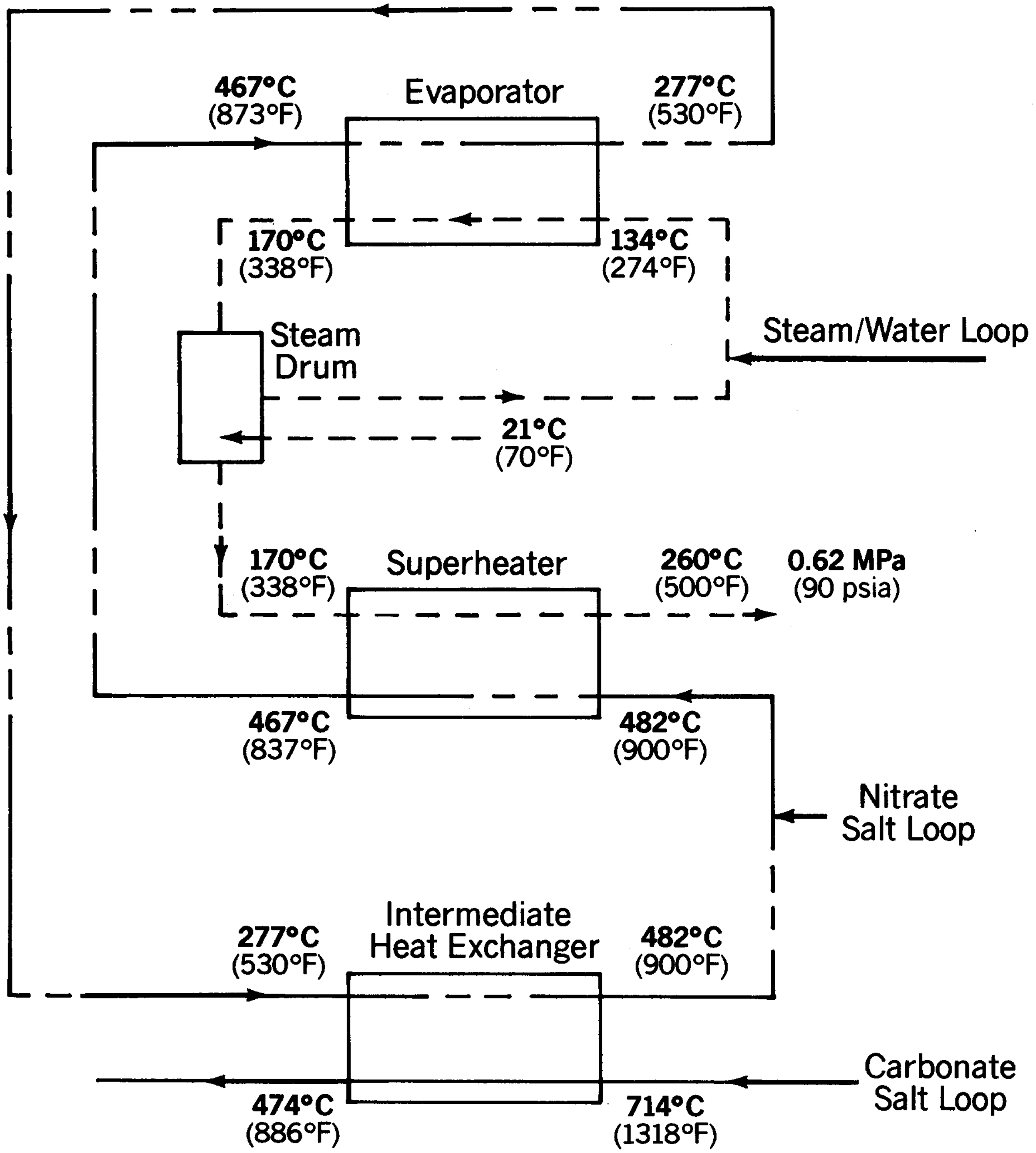

Figure 2-3

Final Chemical Process /Steam Generator Carbonate Salt Flow Diagram

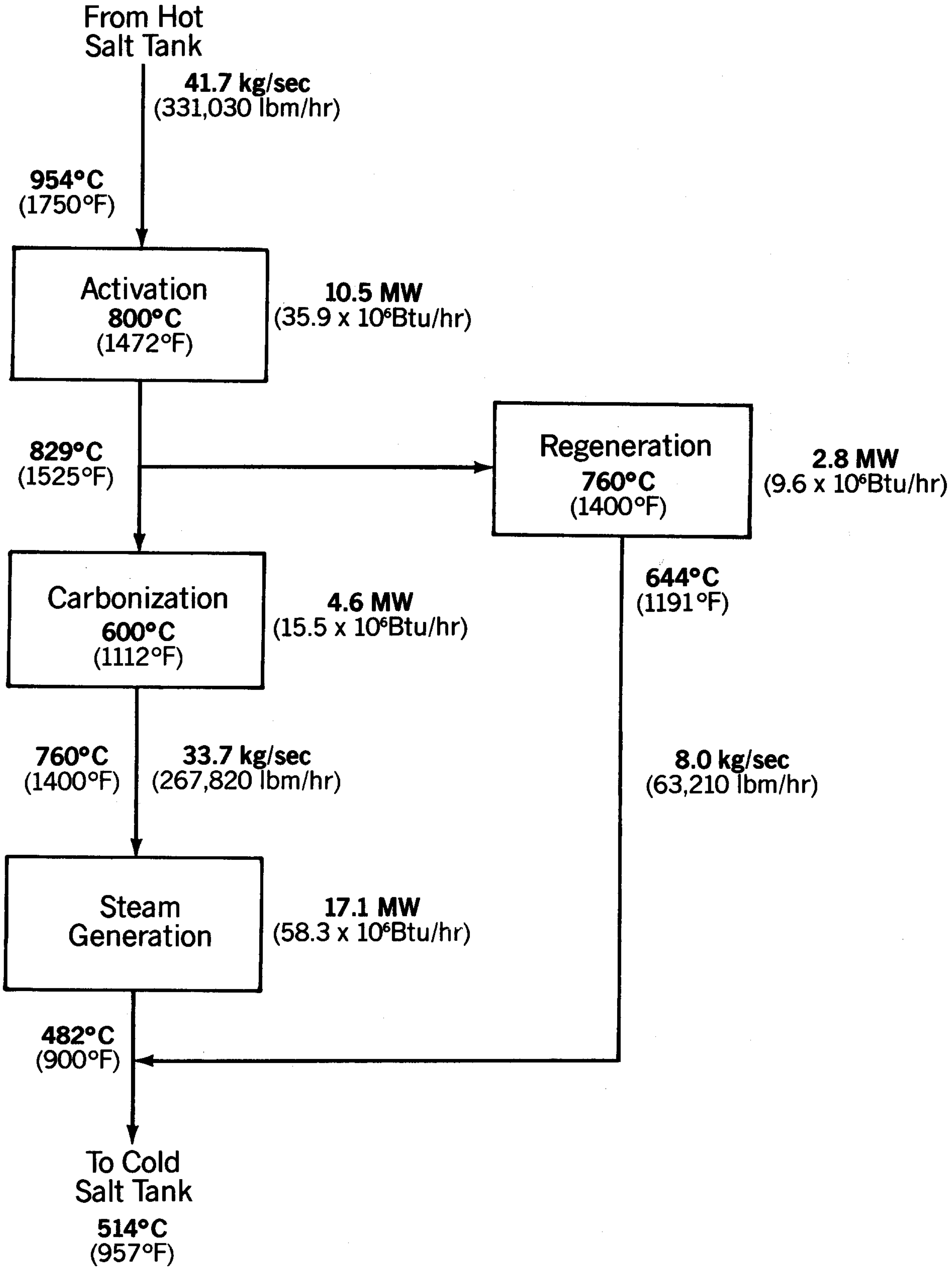

Figure 2-4

TABLE 2-1

TOTAL CARBONATE SALT HEAT LOAD REQUIREMENTS

	Heat Load, MW (10^6 Btu/hr)		
	Initial Design	Revised Design	Final Design
Regeneration	6.5 (22.0)	2.8 (9.6)	2.8 (9.6)
Activation	10.5 (35.9)	10.5 (35.9)	10.5 (35.9)
Carbonization	6.7 (23.0)	4.6 (15.5)	4.6 (15.5)
Steam Generation	11.6 (39.7)	5.2 (17.8)	17.1 (58.3)
Total	35.3 (120.6)	23.1 (78.8)	35.0 (119.3)

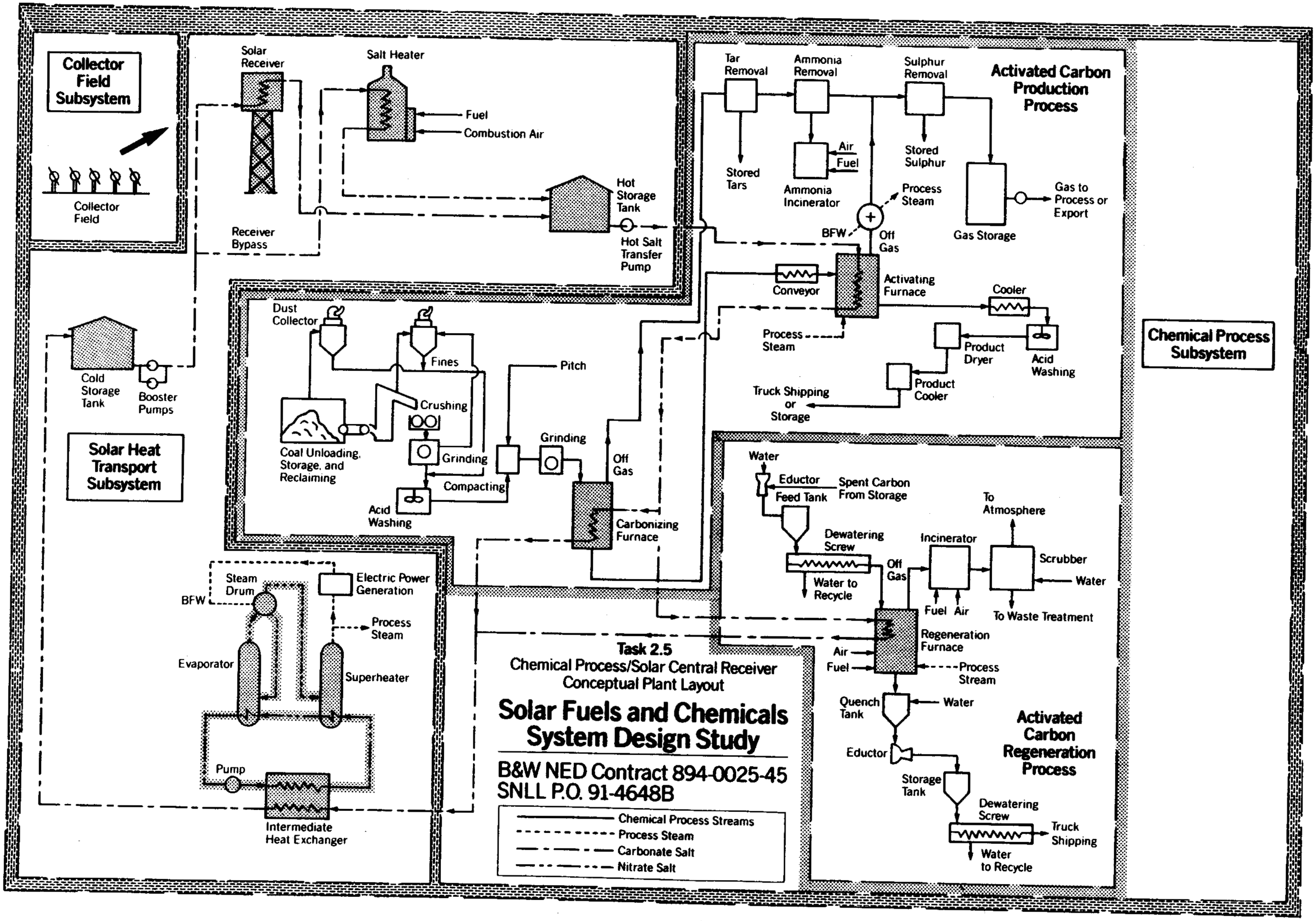
Collector Field Subsystem
Collector Field
Solar Receiver
Salt Heater
Fuel
Combustion Air
Hot Storage Tank
Hot Salt Transfer Pump
Receiver Bypass
Cold Storage Tank
Booster Pumps
Solar Heat Transport Subsystem
Tar Removal
Ammonia Removal
Sulphur Removal
Activated Carbon Production Process
Stored Tars
Air
Fuel
Ammonia Incinerator
Stored Sulphur
Process Steam
Gas Storage
Gas to Process or Export
BFW
Off Gas
Conveyor
Activating Furnace
Cooler
Process Steam
Product Dryer
Acid Washing
Product Cooler
Truck Shipping or Storage
Chemical Process Subsystem
Dust Collector
Fines
Pitch
Crushing
Coal Unloading, Storage, and Reclaiming
Grinding
Grinding
Compacting
Acid Washing
Off Gas
Carbonizing Furnace
Steam Drum
BFW
Electric Power Generation
Process Steam
Evaporator
Superheater
Pump
Intermediate Heat Exchanger
Water
Eductor
Feed Tank
Spent Carbon From Storage
Dewatering Screw
Water to Recycle
Off Gas
Incinerator
Scrubber
To Atmosphere
Water
Fuel
Air
To Waste Treatment
Regeneration Furnace
Air
Fuel
Process Stream
Quench Tank
Water
Eductor
Storage Tank
Activated Carbon Regeneration Process
Dewatering Screw
Truck Shipping
Water to Recycle
Task 2.5
Chemical Process/Solar Central Receiver
Conceptual Plant Layout
Solar Fuels and Chemicals
System Design Study
B&W NED Contract 894-0025-45
SNLL P.O. 91-4648B
Chemical Process Streams
Process Steam
Carbonate Salt
Nitrate Salt

Figure 2-5

2.2 Chemical Process Subsystem

A process to produce activated carbon and regenerate spent carbon using energy supplied by a hot molten carbonate salt has been defined. A major portion of the energy to heat the carbonate salts will be supplied by a solar central receiver. A subbituminous coal [141.3 metric tons/day (156 tons/day)], common to the western United States, was chosen as the raw material. Coal tar pitch [15.4 metric tons/day (17 tons/day)] is also required as a binder in pretreatment. Daily production rates of activated carbon and regenerated carbon are 35.3 metric tons (39 tons) and 28.1 metric tons (31 tons), respectively. The major by-products of the process are product gas and tars. The product gas [9487 m^3/hr (335,000 SCFH)] will be used to heat the carbonate salt during the off hours or as required. This gas has a low heating value of 3.23 kwh/m^3 (312 BTU/SCF). Any excess gas may be sold as fuel or chemical feedstock. Approximately 27.2 metric tons/day (30 tons/day) of by-product tars are produced. These tars have a low heating value of approximately 9.69 kwh/kg (15,000 BTU/lb.) The tars can be burned as fuel or may be sold.

The process to produce activated carbon involves several pretreatment steps to the raw material (coal). After crushing to size, the coal is acid washed to remove acid-soluble ash and destroy the agglomerating properties of the subbituminous coal. The coal is mixed with pitch (which acts as a binder), pulverized, and compacted into pellets. The pellets are reground into granules.

The granules are sent to the carbonization furnace where they are heated to $600^{\circ}C$ ($1112^{\circ}F$) in an oxygen-free atmosphere. The volatiles, containing tar, oil, light hydrocarbons, ammonia, and hydrogen sulfide, are removed from the granules and are sent to the tar removal/ammonia removal systems. The granules (char) from the carbonization furnace are sent to the activation furnace where steam is added. The steam reacts with the char to produce extensive internal surface area. This furnace operates at $800^{\circ}C$ ($1472^{\circ}F$). The product is cooled, treated with acid to remove surface-deposited ash, dried, and shipped. The off-gases from activation, containing mostly hydrogen and carbon monoxide are combined with carbonization off-gas and sent to the sulfur removal system. Hydrogen sulfide is removed by physical absorption and then converted to sulfur. Approximately 0.76 metric tons per day (0.84 tons per day) of sulfur are produced.

The regeneration of spent carbon requires several basic operating steps. Wet spent carbon is fed with a dewatering screw to a furnace. The furnace has three distinct stages. First the spent carbon is dried at about 120°C (250°F). Next the carbon is baked at about 760°C (1400°F) to volatilize the absorbate leaving a carbon deposit on the base carbon. The third and most critical step is reactivation: Steam is added and selectively reacts with the deposited carbon at 954°C (1750°F). The off-gases are usually incinerated to remove any obnoxious or toxic gases.

The carbonization furnace and the activation furnace energy requirements will be supplied entirely with molten salt. Because of the high temperatures required for reactivaton, the regeneration energy requirements will be supplied with both molten salt and fuel. Molten salt will supply about 44% of the total energy required for regeneration.

The process was defined from information gathered mainly from literature. This includes books, articles, and patents (see Section 6.0). Various equipment vendors provided much background and confirming information. Olin also employed a consultant (Dr. John Dollimore, Energy Research Center, University of North Dakota) to provide information on activated carbon and also confirm the necessary operating steps to produce activated carbon. Due to the highly competitive and secretive nature of the activated carbon industry, detailed operating conditions of the process are not available. Many operating conditions are determined experimentally; these are indicated in the text.

2.2.1 Process Description/Process Chemistry

2.2.1.1 Production of Activated Carbon

Chemistry

When subbituminous coal is used as a raw material several pretreatment steps are required in order to produce a homogeneous, quality activated carbon. Besides crushing, grinding, and mixing, an acid treatment step is required. Crushed coal is mixed with phosphoric acid. The acid destroys agglomerating properties of the coal by converting surface oxides into fixed carbon. Also, some acid-soluble ash will be dissolved. This step improves the activating properties of the final product.

The next step in the production of activated carbon is carbonization, which is the formation of a char from a coal. Carbonization is accomplished by heating the coal - usually in the absence of air - to a temperature high enough to dry and volatilize substances in the coal, but at the same time, low enough to avoid cracking of the evolved gases. Temperatures between 500 and 700°C (932 and 1202°F) are required to produce chars suitable for activation by steam (References 1 and 2). During the heating of the coal in an inert atmosphere, three simultaneous reactions occur (Reference 3):

1) Devolatilization

$$\text{Coal} \longrightarrow \text{Char} + [\text{Tar} + \text{Light Oil}]$$

2) Cracking

$$[\text{Tar} + \text{Light Oil}] \longrightarrow \text{Product Gas}$$

3) Deposition

$$[\text{Tar} + \text{Light Oil}] \longrightarrow \text{Char}$$

Char is defined as the undistillable material that remains in the form of a solid. [Tar + Light Oil] is defined as the distillable liquid which has a molecular weight larger than C_6. Tar consists of several hundred compounds with a boiling point usually greater than 200°C (392°F). Light oil consists of compounds with a boiling point less than 200°C. Gas is defined as those compounds lighter than C_6, that is, CO, CH_4, CO_2, C_2H_6, H_2O, etc.

The yield and the composition of the tar, light oil, and product gas depend on the temperature, heating rate, residence time of vapor, type of coal, type of pretreatment, and type of furnace. The actual yield and composition of the products can only be determined by pilot experiments (References 3, 4, and 5).

The chars produced by carbonization have relatively little internal surface area for adsorptive application. To increase the surface area, the char is activated by the action of oxidizing agents, such as steam, at temperatures between 800-1000°C (1472-1832°F) (References 1 and 2). The oxidizing gases attack oxidation portions of the char resulting in the development of a porous structure and an extensive internal surface.

During activation, some of the char is gasified as follows (References 3 and 4):

4) $C + H_2O \longrightarrow H_2 + CO$ $\Delta H = +3.140$ kwh/kg C
(+4860 BTU/lb)

5) $C + 2H_2O \longrightarrow 2H_2 + CO_2$ $\Delta H = +2.384$ kwh/kg C
(+3690 BTU/lb)

Reaction 4) dominates at temperatures above 700°C (1292°F). Reaction 5) dominates at temperatures below 700°C. Some of the gas products may also react as follows:

6) $CO + H_2O \longrightarrow CO_2 + H_2$ $\Delta H = -0.795$ kwh/kg CO
(-1230 BTU/lb)

7) $CO + 3H_2 \longrightarrow CH_4 + H_2O$ $\Delta H = -5.223$ kwh/kg CO
(-8085 BTU/lb)

The degree of the gasification and adsorptive properties of the finished product depends primarily on:

- Concentration of oxidizing gas
- Activation temperature
- Residence time
- Amount and kind of mineral in the char

Again, pilot experiments are necessary to determine the operating conditions required to produce the desired activated carbon.

Process Description

A block diagram for production of activated carbon is shown in Figure 2-6. Simplified process flow diagrams and mass balances are shown in Figures 2-7 through 2-10 and Table 2-2. The basic steps are:

- Pretreatment
- Carbonization
- Activation
- Product classification
- Tar recovery
- Ammonia removal
- Compression
- Sulfur, CO_2, and water removal

PRODUCTION OF ACTIVATED CARBON

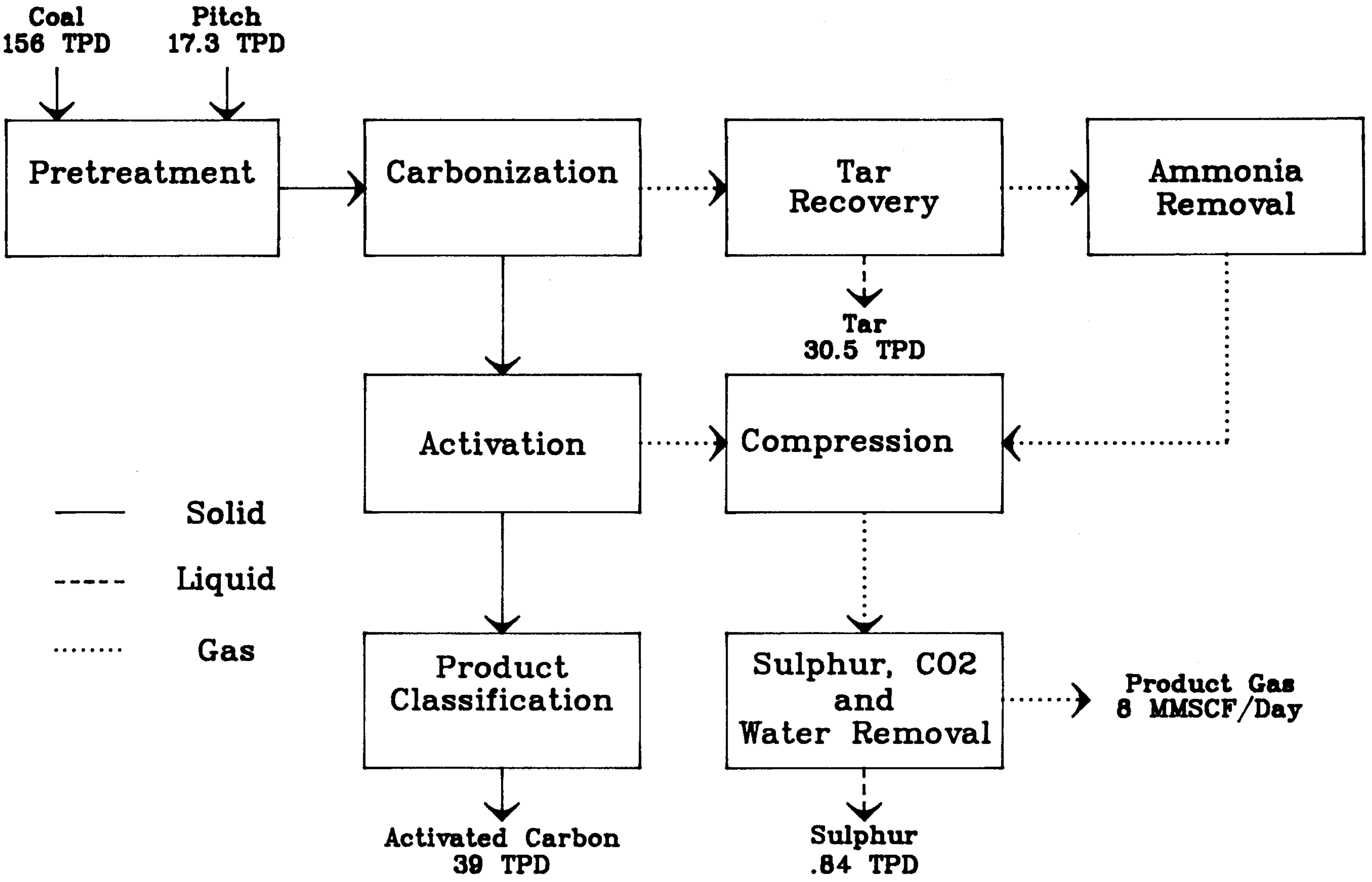

Figure 2-6

TABLE 2-2
MATERIAL BALANCES
PRODUCTION OF ACTIVATED CARBON

	PRETREATMENT					CARBONIZATION/ACTIVATION/PRODUCT CLASSIFICATION							
COMPONENTS	1	2	3	4	5	6	7	8	9	10	11	12	13
Coal	13000.0				13000.0								
Char						8625.5							
Act. Carbon					58.5	58.5			3308.5			3185.0	58.5
Pitch or Tar				1444.3	1444.3		2542.8						
Water	2294.0		36.7		685.8		2790.5	21567.0		12129.0	552.5	65.0	1.3
Light Oil							65.0						
Gas							1053.0			14768.0			
NH_3							22.1						
H_2S							31.2			45.5			
Sulfur													
H_3PO_4			110.2										
HCl											98.2		
Salt													
NO_x													
SO_2													
TOTAL (LB/HR)	15294.0		146.9	1444.3	15188.6	8684.0	6504.6	21567.0	3308.5	26942.5	650.7	3250.0	59.8
TEMPERATURE (F)	77		77	120	175	1112	932	420	180	250	77	100	100
TEMPERATURE (C)	25		25	49	79	600	500	216	82	121	25	38	38
PRESSURE (PSIA)	14.7		14.7	14.7	14.7	14.7	14.7	89.7	14.7	15	14.7	14.7	14.7

	TAR RECOVERY/AMMONIA REMOVAL					SULFUR REMOVAL AND RECOVERY							
COMPONENTS	14	15	16	17	18	19	20	21	22	23	24	25	26
Coal													
Char													
Act. Carbon													
Pitch or Tar	2314.0	228.8											
Water			48.8	48.8	71.5	3737.5	35.8	2.6		1.6		123.5	234.0
Light Oil			65.0	65.0			65.0	6.5		58.5			
Gas			1053.0	1053.0			15821.0	11756.6	3878.6	185.9		1163.5	1397.5
NH_3			22.1		22.1								
H_2S			31.2	31.2			76.7			76.7		2.8	
Sulfur											69.6		
H_3PO_4													
HCl													
Salt						13.0							
NO_x													4.5
SO_2													5.6
TOTAL (LB/HR)	2314.0	228.8	1220.1	1198.0	93.6	3750.5	15998.5	11765.7	3878.6	322.7	69.6	1289.8	1641.6
TEMPERATURE (F)	120	113	113	120	212	95	95	77	40	95	250	250	1600
TEMPERATURE (C)	49	45	45	49	100	35	35	25	4	35	121	121	871
PRESSURE (PSIA)	14.7	16	16	15	15	30	350	350	100	60	40	40	30

Pretreatment

Before being carbonized, the raw coal from storage has to be pretreated to produce granular activated carbon suited for a wastewater treatment and gas purification. The process flow diagram is shown on Figure 2-7. The basic pretreatment steps are (References 8 and 10):

- Crush and grind the raw coal to 8 x 30 mesh granules (90% of the coal will pass through a No. 8 screen, but will be retained on a No. 30 screen).
- Treat with 5% H_3PO_4
- Mix with coal tar pitch
- Dry to 5% moisture
- Pulverize to 80% less than 200 mesh and 60-65% of total less than 325 mesh.
- Compact to obtain 13 mm x 13 mm (1/2" by 1/2") pellet.
- Regrind to a product size 6 x 20 mesh granules.

Raw coal from the mine does not have the requisite porosity. The volatile matters which will be evolved creating pores during carbonization are not uniformly distributed in the coal. In order to prepare a homogeneous mixture of coal, it is necessary to grind the coal to a fine powder or dust and pelletize with a coal tar pitch.

Another pretreatment step necessary, when a low ranking coal such as a subbituminous coal is used, is acid treatment. Acid treatment destroys the agglomerating property of a low ranking coal by converting surface oxides into a fixed carbon (References 8 and 9). Some acid-soluble ash will also be removed. The net result is a product with improved activated properties.

Coal from storage ranges from large lumps to dust. The large lumps are first screened and crushed into 25 mm (one-inch) size. The 25 mm (one-inch) coal is then ground and screened to obtain 8 x 30 mesh granules. Next, the 8 x 30 mesh granules are treated with 5% phosphoric acid in a ratio of 30% coal and 70% acid solution at 82°C (180°F) for about one hour in an acid mixer. The treated coal is pumped to dewaterers where the coal is separated and washed with water. The separated acid solution is recycled to the acid mixer. The coal from the dewaterers is further washed with water in a coal washer. The washed coal is separated in dewaterers from the acid solution, which will be sent to waste treatment. Normally, the coal from dewaterers contains about 15% moisture. The coal is then dried to a moisture content of 5% in a dryer.

The dried coal is then mixed with a coal tar pitch in the ratio of 90 parts coal and 10 parts pitch (the properties of a coal tar pitch typically used as a binder are shown in Section 2.2.2.2). The two are fed together into a pulverizing mill where the material is ground to a fine powder or dust which is 80% less than 200 mesh and 60-65% less than 325 mesh. This coal/pitch mixture is fed into a compactor where it is continuously compacted into pellets of 13 mm (1/2 inch) diameter and 13 mm (1/2 inch) long using a pressure in the range of 275 MPa to 413 MPa (40,000 to 60,000 psi.) The pellets are then crushed in a grinder to form 6 x 20 mesh granules. The oversized granules are reground and again screened while the undersized granules are recycled to the compactor. The hard, uniform granules should have an apparent density of 0.65-0.68 grams/cc (40.6-42.5 lbm/ft^3). The reformed granules are then sent to a storage silo which will have a 24 hour holding capacity.

Carbonization

The pretreated granules are carbonized in a furnace (Figure 2-8), such as a multiple hearth, by heating the granules to $600^{o}C$ ($1112^{o}F$) in an atmosphere free of oxygen. The total residence time and heating rate are important in carbonization to produce char suitable for activation. The reported ranges of a total residence time and heating rate are one to five hours and 50 to $300^{o}C$/hour ($90-540^{o}F$/hr), respectively (References 5,7,8, and 11). The typical process for a subbituminous coal indicated that the granules are heated to $600^{o}C$ ($1112^{o}F$) at $300^{o}C$/hour ($540^{o}F$/hr) and maintained at this temperature for two hours (Reference 8). Different coal types and sources require different heating rates and residence times. The actual conditions are determined by pilot experiments using the proposed coal.

The carbonization furnace is operated at slight positive pressure to prevent the leakage of air into the furnace. Oxygen would react with char and gases, and could cause serious overheating.

PRODUCTION OF ACTIVATED CARBON
PRETREATMENT

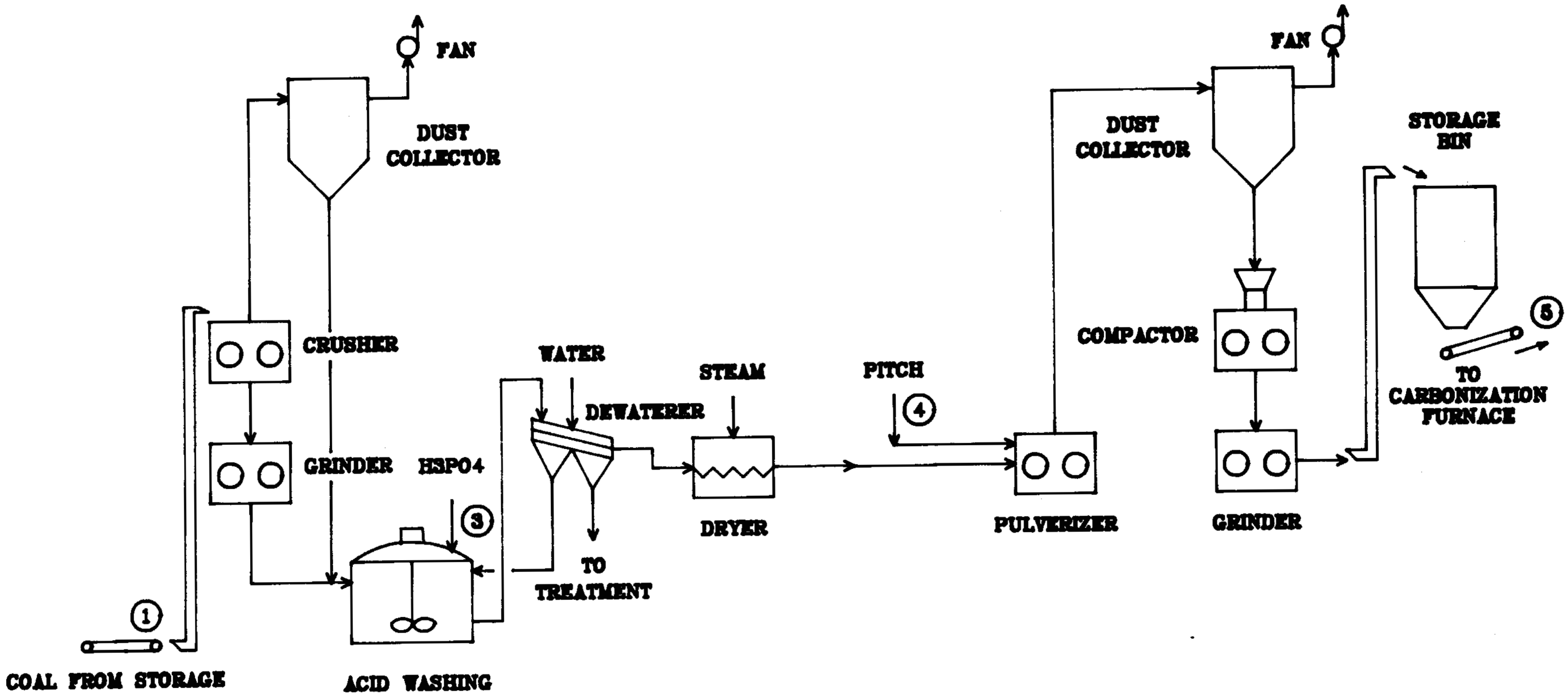

Figure 2-7

The carbonization reactions are slightly endothermic. Most of the energy required to heat the coal to the carbonization temperature and to evaporate the water in the coal is supplied by the molten salt. The total heat requirement is about 0.65 kwh/kg (1000 BTU/lb) coal plus latent heat of water (References 4 and 5).

The individual hearth areas are heated with separate molten salt streams so that the temperature within each hearth area can be maintained at a desired temperature independent of the other hearths. The gases from each hearth are exhausted separately during carbonization to reduce cracking of the evolved gases. The apparent density of the carbonized granules is 0.58 to 0.63 grams/cc (36.2 to 39.3 lb/ft^3) and the yield is about 66% based on a dry coal (References 8 and 11). The off gas, containing tar, NH_3, H_2O, gas, light oil, and sulfur compounds, enters a tar recovery unit. The typical yield of carbonization products are shown in Table 2-3. The typical composition of tar, light oil, and gas is shown in Tables 2-4, 2-5, and 2-6 respectively.

TABLE 2-3

TYPICAL YIELD OF CARBONIZATION PRODUCTS

(Reference 15)

Component	Wt. %
Char	66.35
Tar	8.45
Light Oil	0.50
Gas	8.10
Water	16.19
Ammonia	0.17
H_2S	0.24

TABLE 2-4

TYPICAL COMPOSITION OF TAR

Component	Wt. %*	Wt. %**
Tar Bases	1.3	1.2
Puridine		
Olefins	4.7	4.2
Tar Acids	16.2	14.6
Phenols		
Creosols		
Xylenols		
Aromatics	20.4	18.4
Benzene		
Toluene		
Xylene		
Paraffins and Naphthenes	14.5	13.0
Pitch (Residue above 350°C)	42.9	48.6
Heavy Oil		
Wax		
Carbon		

* Composition of tar produced based on a dry coal (Ref. 5)

** Composition of tar produced based on a dry coal pitch mixture.

TABLE 2-5
TYPICAL COMPOSITION OF LIGHT OIL
(Reference 5)

Component	Wt. %
Benzenes	7
Toluene	8
Olefins	35
Paraffins	50

TABLE 2-6
TYPICAL COMPOSITION OF CARBONIZATION GAS
(Reference 15)

Component	Mole %
CO_2	35.0
CO	14.0
H_2	8.3
CH_4	26.1
C_2H_6	9.9
Unsaturated & Aromatic Hydrocarbons	3.5
N_2	3.2

Activation

The carbonized granules are fed to a furnace (Figure 2-8), such as a multiple hearth, where they are slowly activated with steam at 800°C (1472°F). The rate of activation depends largely upon the rate of admission of steam and the activation temperature. The reported steam rate ranges from 1 to 3 kg/kg char (References 7 and 8). The average steam rate is about 2.5 kg/kg char. Steam enters each hearth separately so that the ratio of steam to char on each hearth can be maintained at the desired ratio. The reported total residence time range is from 3 to 6 hours (References 7 and 11). The average total residence time is about four hours. Actual residence time and steam rates are determined by raw materials used and the required properties of activated carbon product. These conditions are determined by pilot experiments.

The product yield is about 38% based on carbonized granules for an overall yield of about 25% based on a dry coal. The composition of the activation off gas on a dry basis is shown below:

Component	Mole %
H_2	52.5
CO	36.9
CO_2	9.2
CH_4	1.4

Energy required for activation depends on the degree of activation and composition of off-gas produced. The typical composition of activation off-gas, as shown above, indicates that 95% of the char is gasified according to Reaction 4 shown in the chemistry section and the remaining char according to Reaction 5. About 15% CO produced is reacted with steam. At the product yield of 38% based on carbonized granules, a total of 2.69 kwh/kg (4160 BTU/lb) of char is required for heat of reactions and sensible heats of char and steam.

The dust carried over with the activation off-gas is first removed in a dust collector. The off-gas is then cooled to 121°C (250°F) by generating 0.62 MPa (75 psig) steam. The cooled off-gas is combined with the carbonization off-gas from the ammonia removal unit, compressed and cooled to 2.41 MPa (350 psia) and 35°C (95°F) before being fed into the sulfur removal system. The activated granules are fed into the product classification unit.

Product Classification

Product classification is shown on Figure 2-8. The activated granules are first cooled down to 82°C (190°F) in a cooling conveyor, using cooling water, and fed into an acid mixer where acid-soluble ashes on the surface of activated carbon are removed. A 15% HCl solution is chosen for this purpose. The treated granules are separated from the acid solution in dewaterers and washed with water in a product washer. The washing water, containing some acid, is sent to a waste treatment. The washed granules containing about 15% moisture are then dried with steam to a moisture content of less than 2%. The dried product is cooled and screened to obtain 6 x 20 mesh granules while the undersized product is recycled to a pulverizer in a pretreatment unit.

Tar Recovery

The carbonization off-gas containing tar, light oil, gas, NH_3, water, and sulfur compounds leaves the carbonization furnace at a temperature in the range of 500 to 600°C (932-1112°F). The tar recovery process flow is shown on Figure 2-9. In a collecting main, the gas is cooled by direct contact with flushing liquor. The gas leaves the collecting main at 85°C (185°F). Seventy-one percent of the tar with some of the water is condensed from the gas. In addition to cooling and condensing the tar and water, the flushing liquor washes tar fog and dust from the gas, dissolves a portion of the ammonia, and flushes pitch from the collecting main. The dissolved ammonia includes nearly all the fixed ammonia salts (i.e., ammonium chloride), together with a portion of the free ammonia salts (i.e., ammonium carbonate). The gas is separated from the condensed tar and water and enters a primary cooler. In the primary cooler, the gas is further cooled to about 35°C (95°F). Water and about 20% of the total tar recovered is condensed.

The tar and water condensed in the collecting main and the primary cooler are discharged into a decanter which separates the mixture into a lower layer of tar and upper layer of liquor. The liquor is cooled in a flushing liquor cooler before being recycled to the collecting main. The decanted tar is pumped to storage.

PRODUCTION OF ACTIVATED CARBON
CARBONIZATION / ACTIVATION / PRODUCT CLASSIFICATION

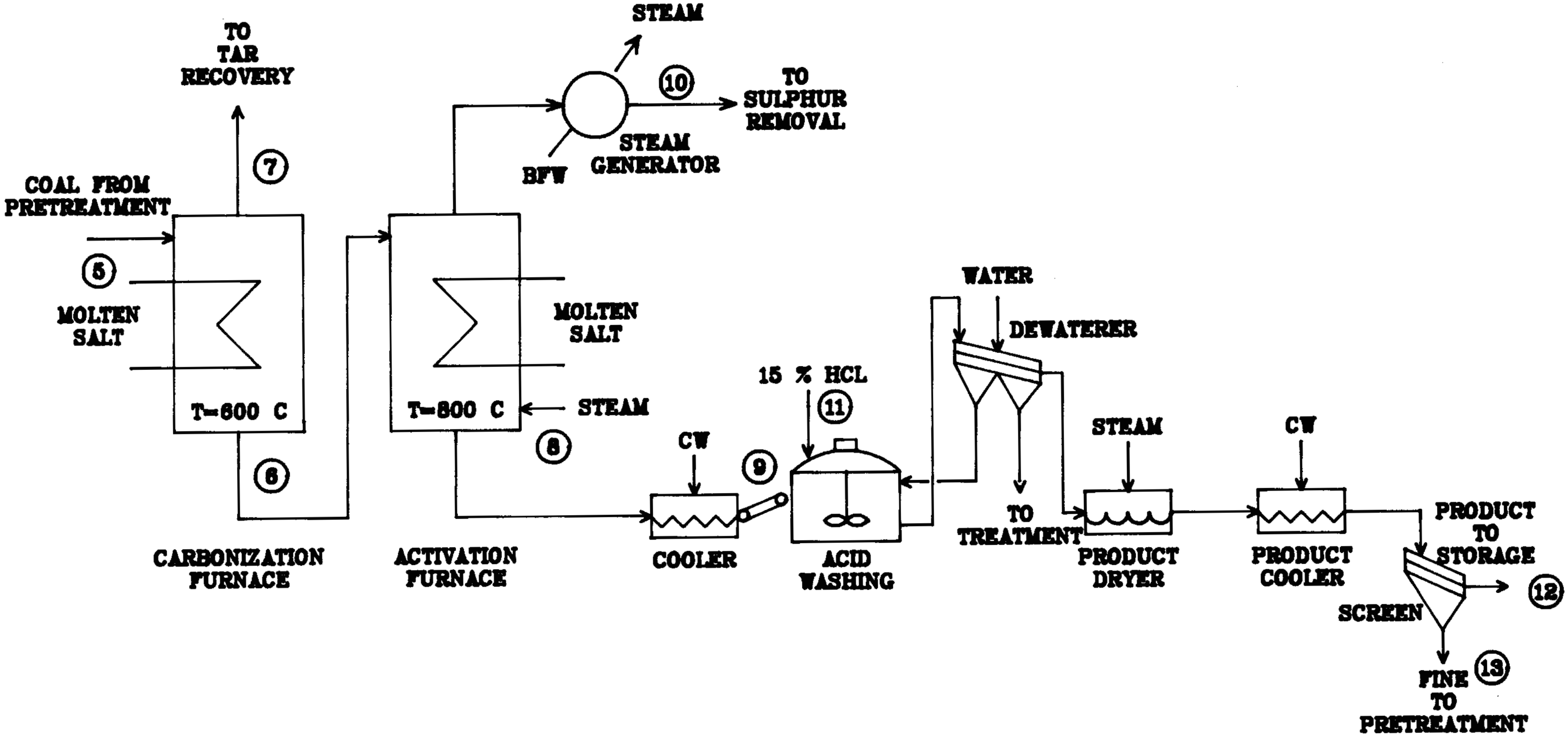

Figure 2-8

The gas from the primary cooler flows to an exhauster which pulls the gas from the carbonization furnace through the primary cooler and pushes it through the ammonia removal system. The gas enters the exhauster with a suction of 2.5 to 3.0 kPa (10 to 12 inches of water) and leaves under a pressure of 12.5 to 13.7 kPa (50 to 55 inches of water). The gas temperature is raised about $10^{o}C$ ($18^{o}F$) by compression in the exhauster.

Tar remaining in the gas from the exhauster would gradually precipitate throughout the rest of the gas purification system unless removed. In order to prevent the formation of these troublesome deposits, the gas is passed through a tar extractor where about nearly all of the remaining tar is condensed. The tar from the precipitator is pumped to storage. The gas from the precipitator flows to the ammonia removal system.

The tar recovery system can be designed and specified by vendors, such as Raymond Kaiser Engineers, Inc.

Ammonia Removal

The yield of ammonia produced by carbonizing coal usually depends on the carbonization temperature. The typical amount of ammonia produced is about 3.4 lb/ton of coal (References 4 and 5). Because of the small amount of ammonia produced (374 lbs/day worth about 56$/day at 210$/ton NH_3), recovery as ammonium sulfate or as a concentrated liquor is not feasible. The ammonia will be stripped from the process and incinerated as shown on Figure 2-9.

The majority of ammonia produced during carbonization is removed in ammonia scrubbers in the form of dilute liquor. The purified gas from the ammonia scrubber is combined with the activation off-gas, compressed to 2.41 MPa (350 psia) and cooled to $35^{o}C$ ($95^{o}F$) before entering the sulfur, CO_2, and water removal system. The ammonia is stripped from the dilute liquor with steam in an ammonia liquor still. The liquor is pumped to a stripped liquor cooling tower to remove heat picked up in the scrubbers and still before being recycled to the ammonia scrubber. The gaseous ammonia containing about 80% water vapor is combusted in a furnace with fuel.

PRODUCTION OF ACTIVATED CARBON
TAR RECOVERY / AMMONIA REMOVAL

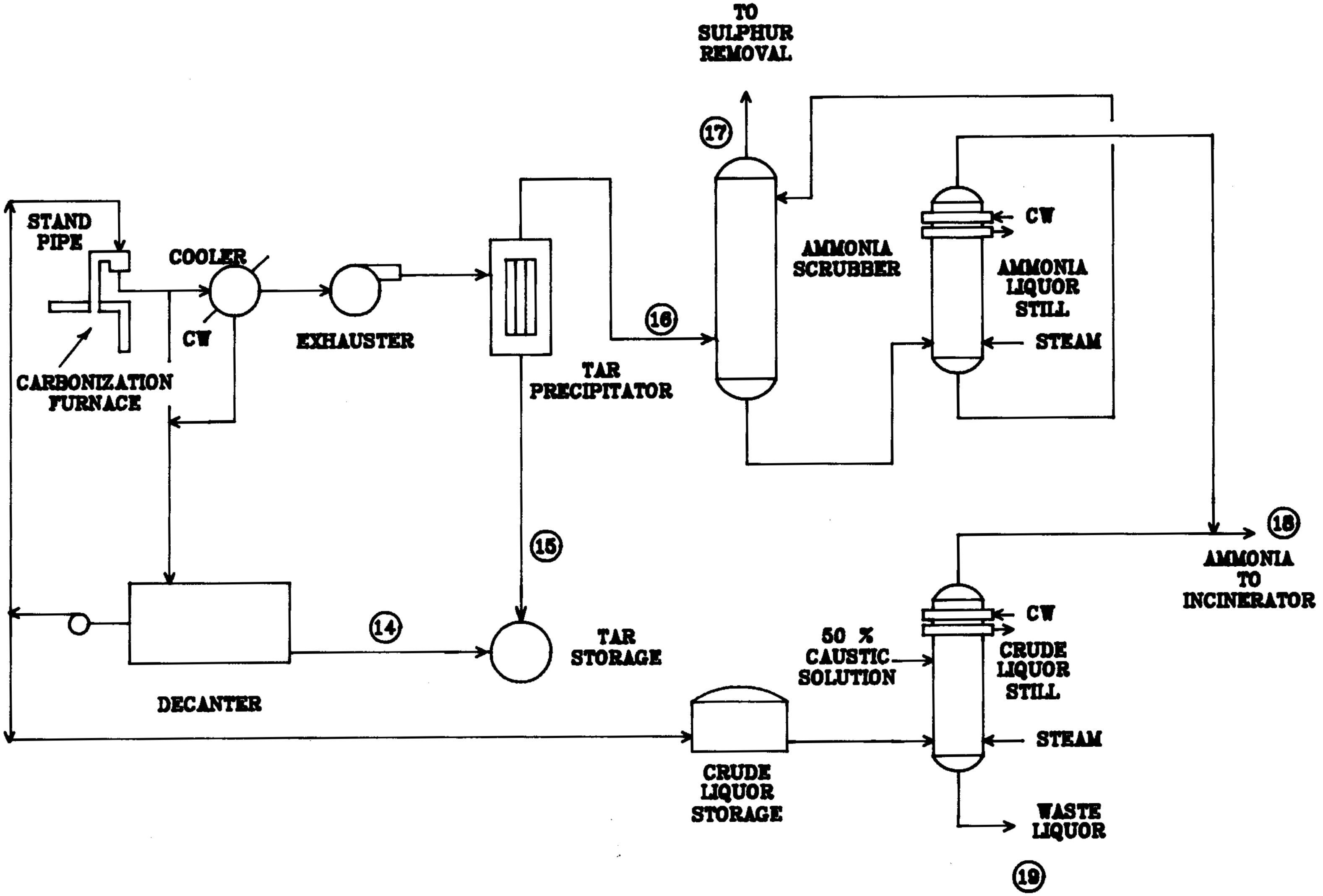

Figure 2-9

Some of the ammonia is removed with the flushing liquor in the collecting main of the tar recovery system. The flushing liquor contains fixed ammonia salts, principally ammonium chloride, and a portion of free ammonia salts, such as ammonium carbonate. In the crude liquor still, the free salts are decomposed by the steam and the fixed salts are decomposed by a 50% caustic solution. The liquor is pumped to a waste pond for treatment. The gaseous ammonia with 80% water vapor is incinerated with fuel. Energy required in the incinerator to burn NH_3 and H_2S is about 0.293 MW (1×10^6 BTU/hr).

The ammonia removal and sulfur removal systems can be designed and specified by vendors, such as Raymond Kaiser Engineers, Inc.

Sulfur, CO_2 and Water Removal

The off-gases from carbonization and activation contain sulfur compounds, mainly H_2S, which need to be removed. The process flow diagram is shown on Figure 2-10. The level of sulfur compounds in the off-gases primarily depends on the level of sulfur in the raw coal. The combined off-gas also contains about 10 mole % CO_2 and is saturated with water vapor. Complete removal of CO_2 and water vapor is not necessary. However, the gas should be dehydrated to a dew point approximately 3-6^{o}C (5-10^{o}F) below the lowest temperature prevailing in the gas distribution system to prevent condensation of water which accelerates corrosion. The value of the gas can be upgraded by removing CO_2 and water vapor. It was assumed for this design that the product gas would be upgraded to less than 4 ppm H_2S, 1% CO_2, and 200 ppm water (pipeline specification) before storage.

There are numerous processes available for hydrogen sulfide and CO_2 removal and dehydration (References 12,13, and 14). The Selexol process from Norton Company was selected for the conceptual design. The main advantage of this process over other processes is that H_2S and CO_2 removal and dehydration can be combined in one step. The Selexol process can remove H_2S to less than 1 ppm and water to less than 200 ppm. CO_2 can be retained or removed as required.

The gas containing H_2S, CO_2, and water enters the absorber at 2.41 MPa (350 psia) and 0-2°C (32-36°F). Most of the H_2, CO, and CH_4 absorbed are removed from a Selexol solvent in a high pressure flash drum and recycled to the absorber. Most of the CO_2 is removed in a low pressure flash drum. Water vapor, light oil, and the remaining CO_2 are stripped with steam. The solvent is recycled to the absorber after it is cooled to about 0°C (32°F) with a refrigerant. The stripped gas, containing about 35 mole % H_2S and 65 mole % CO_2 in a water and light oil free basis, enters a Claus unit to recover H_2S as sulfur. The pressures at the high and low flash drums depend on the purity of gas desired.

The basic chemical reactions occurring in the Claus process are;

(1) $H_2S + 1/2\ O_2 = H_2O + S$

(2) $H_2S + 3/2\ O_2 = H_2O + SO_2$

(3) $2H_2S + SO_2 = 2H_2O + 3S$

Reactions (1) and (2) take place in a thermal reactor. Reaction (3) takes place in catalytic converters.

Effluent from the thermal reactor is cooled in a waste heat boiler by generating a high pressure steam. The effluent from the waste heat boiler and catalytic converters are cooled in condensers by generating a low pressure steam. Sulfur is condensed and pumped to a storage tank. Recovery of as high as 96% sulfur can usually be attained.

After leaving the last sulfur condenser, the exhaust gases, while still containing unreacted sulfur compounds and a small amount of sulfur vapor, are incinerated, in order to convert all sulfur compounds to sulfur dioxide, before venting to the atmosphere.

PRODUCTION OF ACTIVATED CARBON SULPHUR REMOVAL AND RECOVERY

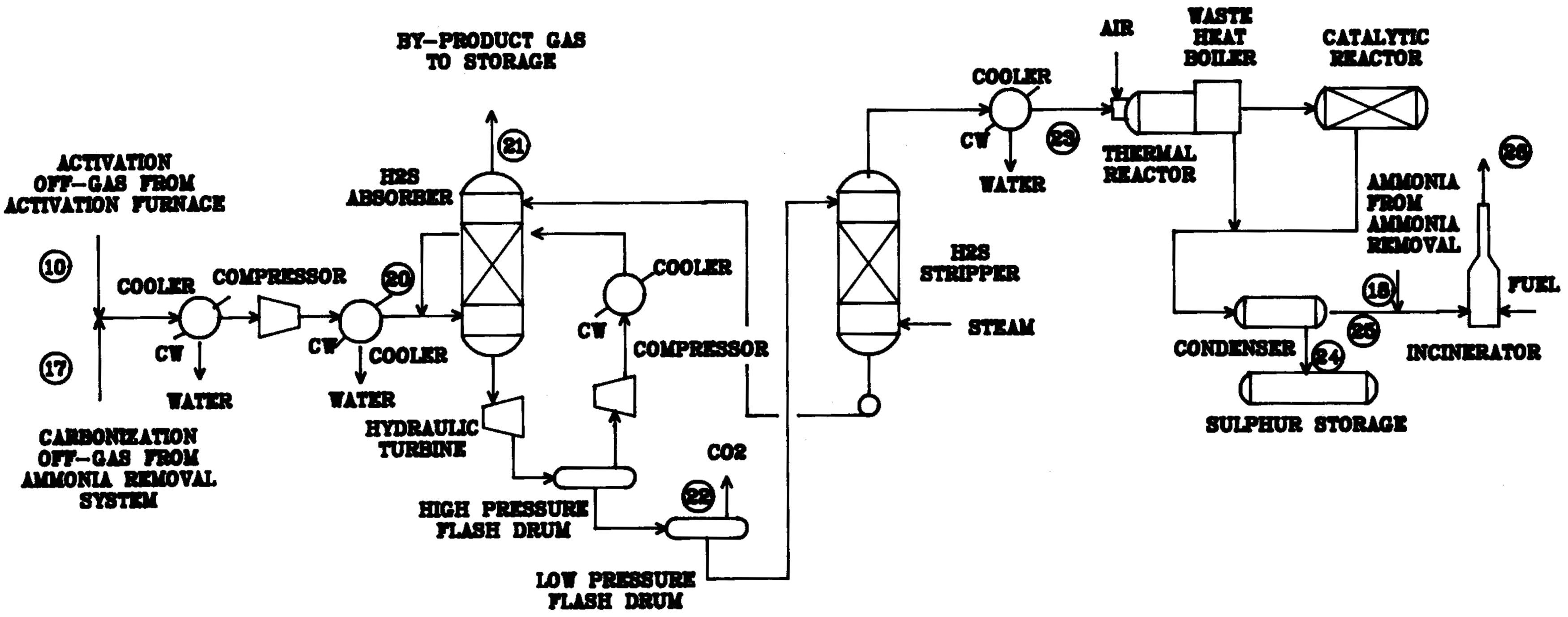

Figure 2-10

2.2.1.2 Regeneration of Spent Activated Carbon

Chemistry

There are three basic steps in the regeneration of spent carbon: drying, baking and reactivation. Spent carbon is received wet. Hence, in the drying step, the moisture is evaporated from the spent carbon at 120-150°C (250-300°F). Some absorbate may be volatilized, but most of it remains intact on the carbon surface. In the baking step, the carbon temperature is increased to 480-760°C (900-1400°F). This results in the decomposition of the absorbate to volatile organic compounds and a carbonaceous char residue:

$$\text{Carbon + absorbate} \xrightarrow[760^\circ\text{C } (1400^\circ\text{F})]{\text{Heat}} \text{Carbon + Char + Volatile Organics}$$

Depending on the characteristics of the absorbate, 50 to 90% of the absorbate may be removed during the baking step (Reference 35). The final and most critical step is reactivation. In reactivation, the char residue is selectively reacted with water or CO_2, leaving the carbon base intact:

$$\text{Char} + H_2O \xrightarrow[955^\circ\text{C } (1750^\circ\text{F})]{\text{Heat}} CO + H_2$$

At high temperatures (approx. 955°C/1750°F) steam will preferentially react with the char to produce carbon monoxide and hydrogen. Control of the reactivating gases is critical: there should be no excess oxygen. Oxygen would rapidly oxidize the carbon base structure.

Yield losses are generally between 3 and 10%, depending on furnace operation, skill of operators, and furnace control. This yield loss includes both losses due to reaction and losses due to breakage. The off-gases from the regeneration furnace, consisting of H_2, CO_2, CO, N_2, H_2, and volatile organics, are sent to an incinerator. Here, any remaining obnoxious gases are burned, allowing discharge to the atmosphere.

These organics are converted to CO_2 and H_2O. Also, the CO and hydrogen are burned:

$$\text{Volatile organics} + O_2 \longrightarrow CO_2 + H_2O$$

$$CO + 1/2\ O_2 \longrightarrow CO_2$$

$$H_2 + 1/2\ O_2 \longrightarrow H_2O$$

Depending on the absorbate and organics volatilized, the incinerating is sometimes not required; wet scrubbing of the off-gas is sufficient (Reference 32).

Process Description

The regeneration involves three main operations:

1. Spent carbon and product handling
2. Regeneration furnace operation
3. Off-gas handling

A simplified flow diagram and mass balance are shown in Figure 2-11 and Table 2-7.

Spent carbon is generally received from the customer as a wet slurry. This slurry is tranferred from the trucks or rail cars to storage tanks.

Several storage tanks would be required so that spent carbon requiring special handling can be kept separate from others. This may be an important factor during the regeneration procedure because spent carbon will be received from many different sources (wastewater treatment, food processing, chemical processing, etc.).

Spent carbon is transferred, using a water eductor, from a storage tank to the feed tank. Use of a water eductor will reduce breakage which would occur if a slurry pump was used. The wet carbon is fed to a dewatering screw where the moisture is reduced to about 40%. Most of the water can be recycled to the eductors, but a portion will be sent to waste treatment. This water will contain a small amount of the absorbate.

Wet spent carbon is fed to the regeneration furnace. This furnace has three distinct steps: drying, baking, and reactivation. Moisture is vaporized in the drying step at 120-150^{o}C (250-300^{o}F). The absorbate is decomposed during the baking step to volatile organics leaving a deposited char on the base carbon. This step occurs at 480-760^{o}C (900-1400^{o}F). In reactivation, steam is added to selectively react with the deposited char, leaving the base carbon intact. Temperatures of up to 980^{o}C (1800^{o}F) are required for this step. The steam rate is generally between 0.8 and 1.1 kg

REGENERATION OF SPENT CARBON

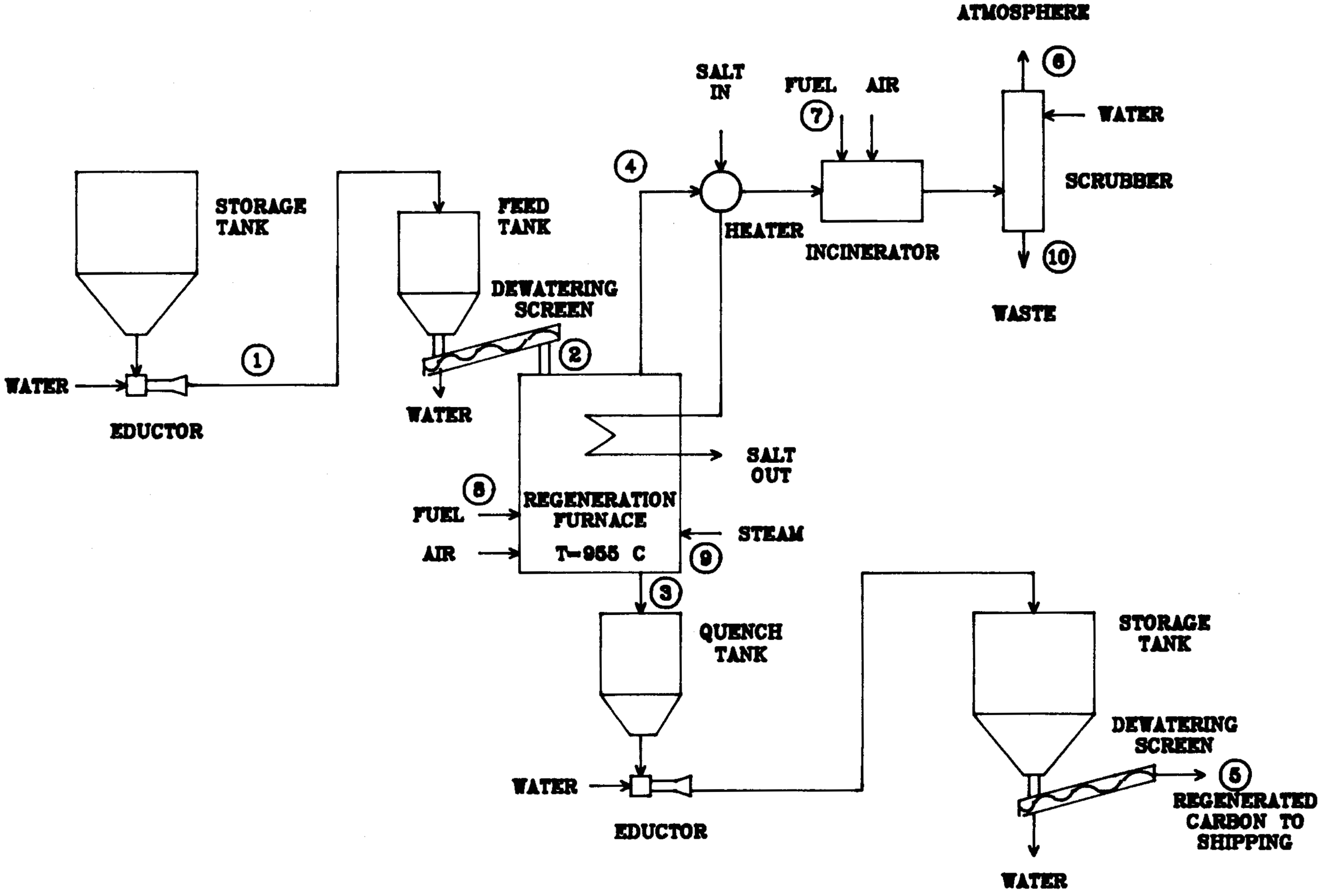

Figure 2-11

TABLE 2-7
MATERIAL BALANCE
REGENERATION OF ACTIVATED CARBON

COMPONENTS	1	2	3	4	5	6	7	8	9	10
Carbon	2741	2741	2604	27	2604					NEG
Absorbate*	1106	1095		822						NEG
H_2O	22833	2558		5517	2604	17829			2800	3000
CH_4							317	327		
O_2						1008				
N_2				4305		25973				
CO_2				899		5435				
CO				896						
H_2				64						
TOTAL (LB/HR)	26680	6394	2604	12530	5208	50245	317	327	2800	3000
TEMPERATURE (F)	70	70	1750	500	130	175	70	70	420	70
TEMPERATURE (C)	21	21	954	260	54	79	21	21	216	21
PRESSURE (PSIA)	40	14.7	14.7	19	14.7	14.7	35	35	89.7	30

* Level of absorbate on spent carbon can range from 0.1 to 0.5 lbs absorbate/lb carbon; 0.4 lbs/lb carbon was used for material balance.

steam/kg of dry spent carbon (Reference 8). A steam rate of 1.0 kg/kg of dry spent carbon was used as a basis for this design.

Studies have shown that the length of the drying and baking steps had no significant effect on the properties of the reactivated carbon (Reference 33). The reactivation step residence time is generally between 10 and 15 minutes (Reference 33). For versatility, the regeneration furnace should be designed for the maximum activating time.

Experience has shown that a total of about 5.17 kwh/kg (8000 BTU/lb) of dry spent carbon is required for regeneration. Of this 5.17 kwh/kg (8000 BTU/lb), about 2.91 kwh/kg (4500 BTU/lb) are required in the regeneration furnace, with the balance used in the after burner (Reference 31). In the regeneration furnace, the energy requirements are distributed as follows (Reference 33):

Drying	40%
Baking	8%
Reactivation	52%

Carbonate salts will be used to supply heat to the drying and baking steps; natural gas (or by-product gas) will be used to supply the higher temperatures required for the reactivation step.

The reactivated carbon is discharged from the furnace to a quench tank. The resultant slurry is transferred through an eductor to storage tanks. A dewatering screw feeds a wet (40-50%) carbon to shipping.

The off-gas from the regeneration furnace is heated to about 650^{o}C (1200^{o}F) with molten carbonate salt. This will reduce the amount of fuel required in the off-gas incinerator. Air and fuel are added to the incinerator to destroy the volatile organics produced during the baking step. Exit gas should be controlled to contain about 2% excess oxygen to insure complete combustion. The gases from the incinerator are scrubbed to remove any particulate water and also to reduce the gas temperature to the draft fan. The scrubbed gas is discharged to the atmosphere.

Because of varying absorbates on spent carbon, the actual operating conditions of the furnace will be different for each. Actual conditions would be determined in a pilot test.

2.2.1.3 Safety

There are several potential safety problems which must be considered during facility design and operation strategy. Hot gases are evolved during the carbonization ($600^{o}C/1112^{o}F$) and activation ($800^{o}C/1472^{o}F$) step. It is important that there is no air leakage into these systems; they should be operated under positive pressure. It should be noted that the design provides for these gases to be cooled upon exiting the furnace.

Activated carbon exiting the activation furnace at $800^{o}C$ ($1472^{o}F$) is very reactive and will burn if contacted with air. The activated carbon should be held under an inert atmosphere, such as nitrogen, until the carbon can be cooled.

Several operating steps during coal pretreatment involve crushing, grinding and pulverizing. These operations are inherently dusty and will require dust collection to prevent personnel exposure. Release of this dust must also be controlled to prevent deposits on the solar collector mirrors.

Use of hot carbonate salts, as high as $955^{o}C$ ($1750^{o}F$), also poses potential personnel exposure in case of leaks or uninsulated equipment. Proper equipment design should prevent these problems. It should also be noted that all equipment and pipelines should be free draining to prevent salt freeze-up during shut-down periods.

In the regeneration system, spent carbon from many different sources will be handled. Some of these spent carbons are likely to contain hazardous materials. Care should be taken to prevent personnel exposure to these materials.

2.2.1.4 Environmental

Waste Water

Waste water streams from production of activated carbon and regeneration of spent carbon are listed in Table 2-8. Waste streams containing HCl or H_3PO_4 will be mixed with a caustic solution to adjust the pH before being discharged.

TABLE 2-8

WASTE WATER STREAMS

Equipment	Location	Flow Rate (lbs/hr)	Composition (wt %)
Production			
Dewaterers	Pretreatment	56,040	0.2 H_3PO_4 99.8 Water
Dewaterers	Product Classification	6,858	1.4 HCl 0.95 Acid Soluble Ash (SiO_2, Al_2O_3, etc.) 97.65 Water
Waste Liquor	Ammonia Removal	3,780	0.35 Salt (NaCl, Na_2SO_4, etc.) 99.65 Water
Regeneration			
Crude Water Purge		1,280	99.9 Water 0.1 Absorbate
Scrubbing Water Purge		3,000	100. Water Neg. Carbon Neg. Absorbate

There are two waste water streams from the regeneration section. Water used in the eductors to transport the spent carbon to the regeneration furnace will be purged and contain some absorbate. This waste stream would be treated by carbon absorption to remove the absorbate before discharge. The other waste stream will be from the off-gas scrubber. This stream may contain small amounts of carbon and absorbate and would be treated by carbon absorption also.

Air Pollution

In production of activated carbon, a stack gas containing 2.0 kg/hr (4.5 lbs/hr) NO_x and 2.5 kg/hr (5.6 lbs/hr) SO_2 will be emitted to the atmosphere from an incinerator in a sulfur recovery system. These rates are relatively low, but allowable limits would depend on EPA regulations in the plant site area. NO_x is mainly generated from the combustion of ammonia removed from the carbonization off-gas. During the combustion of ammonia, 90% of ammonia is converted to nitrogen and most of the remaining ammonia is converted to NO_x. If this emission rate does not meet EPA regulations for a proposed plant site, the ammonia could be removed as either ammonium sulfate or concentrated ammonia liquor (30-35%).

SO_2 is a product of H_2S combustion. H_2S is removed from the combination off-gas in a sulfur removal system. The H_2S is converted to sulfur in a Claus unit. Normal conversion is about 96%. If a higher efficiency is required to meet EPA regulations for a proposed plant site, additional catalytic reactors can be installed to increase the conversion to 98-99%.

In the regeneration of spent carbon, the incinerator off-gas is cooled by scrubbing water and the gas is vented to the atmosphere. This vent gas, containing water, nitrogen, oxygen, and carbon dioxide, will not be a pollution problem.

2.2.2 Products/By-Products/Raw Materials/Utilities

2.2.2.1 Products/By-Products

Commercial grades of activated carbon are designed as either gas-phase or liquid-phase adsorbents. Liquid-phase carbons are generally granular or powdered in form; gas-phase, vapor-adsorbent carbons are hard granules. The properties of activated carbon depend on the application. The typical properties of activated carbon used for liquid-phase and gas-phase application are listed in Table 2-9.

The activated carbon plant produces off-gas from carbonization and activation. The rate of the combined off-gas after H_2S, CO_2, and water removal is about 3625 kg/metric ton (7240 lbs/ton) activated carbon or 2.27 x 10^5 m^3/day (8 x 10_6 SCF/day). The off-gas will be at a pressure of about 2.41 MPa (350 psia). The combined off-gas has a low heating value of 3.23 kwh/m^3 (312 BTU/SCF or 8892 BTU/lb). The composition of the combined off-gas is shown in Table 2-10.

Sulfur, removed from the off-gas, is also a by-product. Approximately, 760 kg (1670 lbs) of 96% sulfur are produced each day.

By-product tars are recovered from the off-gas and stored. Approximately 27,700 kg (61,000 lbs) per day are recovered. These tars have a low heating value of approximately 9.69 kwh/kg (15,000 BTU/lb). The typical composition is shown in Table 2-4.

The table below summarizes the products/by-products produced in the process at design rates:

Product/By-Product	Metric Tons/Day	Tons/Day
Activated Carbon	35.3	39
Regenerated Carbon	28.1	31
By-Product Gas	128 (2.27 x 10^5 m^3/day)	141 (8 x 10^6 SCF/day)
By-Product Tars	27.7	31
Sulfur	0.7	0.8

TABLE 2-9

RANGES OF PROPERTIES OF GRANULAR ACTIVATED CARBON

(Reference 16)

Property	Gas Phase	Liquid Phase
Total Surface Area, m^2/g (N_2 BET Method)	1050-1150	950-1100
Iodine Number, Minimum	1050-1200	900-1000
Molasses Number, Minimum	-	200-230
Apparent Density, g/cc	0.44-0.48	0.44-0.48
Particle Density, g/cc (Hg Displacement)	0.8	0.71-0.78
Pore Volume, cc/g (Within Particle)	0.8	0.81-0.94
Ash %, Maximum	8	8-8.5
Mesh Size	4 x 30	8 x 50

TABLE 2-10

COMPOSITION OF PRODUCT GAS

Component	Mole %	Wt.%
CO	39.82	84.19
H_2	56.27	8.56
CH_4	2.57	3.10
C_2H_6	0.29	0.66
CO_2	1.02	3.40
H_2O	0.02	0.02
Light Oil	0.01	0.06

2.2.2.2 Raw Materials

The type of coal selected for production of activated carbon is subbituminous coal. The largest United States deposits of subbituminous coal are in the western states, including Colorado, Montana, New Mexico, Washington, and Wyoming, which are close to a proposed location of the activated carbon production plant (Southwest U.S.).

The typical analysis of the subbituminous coal that can be used for production of activated carbon is as follows on a moisture-free basis by weight:

Volatile Matter: 35-40%
Fixed Carbon: 55-60%
Acid-Insoluble Ash: Less than 2.5%
Sulfur: Less than 2%

An acid-insoluble ash content less than 2.5% is essential to produce activated carbon with less than 10% ash. In the production of activated carbon, most of the volatile matter will vaporize during carbonization and some of the fixed carbon will be gasified during activation with steam. The overall yield of activated carbon from a subbituminous coal is about 25%. During carbonization and activation, the ash will be intact; the concentration of ash in activated carbon will be increased by four times.

Other raw materials required in the production of activated carbon are 75% phosphoric acid and 30% hydrochloric acid for coal and product treatment, respectively. A coal tar pitch is required as a binder in a pelletizing step. The industrial grade phosphoric acid and hydrochloric acid is acceptable. The characteristics of a coal tar pitch are shown below (Reference 8):

Softening Point	129.2^{o}C (264.6^{o}F)
Benzene Insolubles	33.2% by Weight
Quinoline Insolubles	13.1% by Weight
Coking Value (Conradson)	61.1% by Weight
Ash	0.17% by Weight

The raw material consumption rates, based on 35.3 metric tons (39 tons) per day of activated carbon, are shown below:

	Kg/Kg Activated Carbon	Kg/sec	Lb/Hr
Coal (Dry Basis)	4	1.638	13,000
Pitch	0.44	0.180	1,430
75% H_3PO_4	0.05	0.018	146
30% HCl	0.10	0.041	328

2.2.2.3 Utilities

Table 2-11 lists the major users of steam for production of activated carbon and regeneration of spent carbon. Total steam usage is 3.619 kg/sec (28,720 lbs/hr) based on 0.62 MPa (75 psig) steam at $208^{\circ}C$ ($407^{\circ}F$). As shown in Figure 2-12, steam is provided by a waste heat boiler and a salt heated boiler. Off-gas from the activation furnace at $800^{\circ}C$ ($1472^{\circ}F$) provides 1.810 kg/sec (14,365 lb/hr) of 0.62 MPa (75 psig) saturated steam. The salt heated boiler will supply the balance of the required steam: 1.809 kg/sec (14,355 lbs/hr) of 0.62 MPa (75 psig) superheated [$260^{\circ}C$ ($500^{\circ}F$)] steam.

Table 2-12 lists the major users of cooling water along with the cooling duty required. Additional cooling will be required for the vendor designed package units (tar recovery, ammonia removal, and sulfur removal).

Table 2-13 lists the major users of water for production of activated carbon and regeneration of spent carbon. Total water usage is 9.727 kg/sec (77,200 lbs/hr). About 1.525 kg/sec (12,100 lbs/hr) of water condensed during off-gas cooling and compression is used. The remaining water is made up with a filtered well water.

Additional utility requirements include electricity, instrument air, and nitrogen. Nitrogen may be required for activated carbon handling and shipping.

TABLE 2-11

STEAM USERS*

Production

Equipment	Location	Steam Rate (Lb/Hr)
Acid, Mixer	Pretreatment	764
Dryer	Pretreatment	2,090
Activation Furnace	Activation	21,567
Acid Mixer	Product Classification	62
Dryer	Product Classification	397
Ammonia Liquor Still	Ammonia Removal	520
Crude Liquor Still	Ammonia Removal	520

Regeneration

Regeneration Furnace		2,800
	Total	28,720

* Steam required in the Selexol unit will be supplied from the Claus unit.

CHEMICAL PROCESS STEAM GENERATION

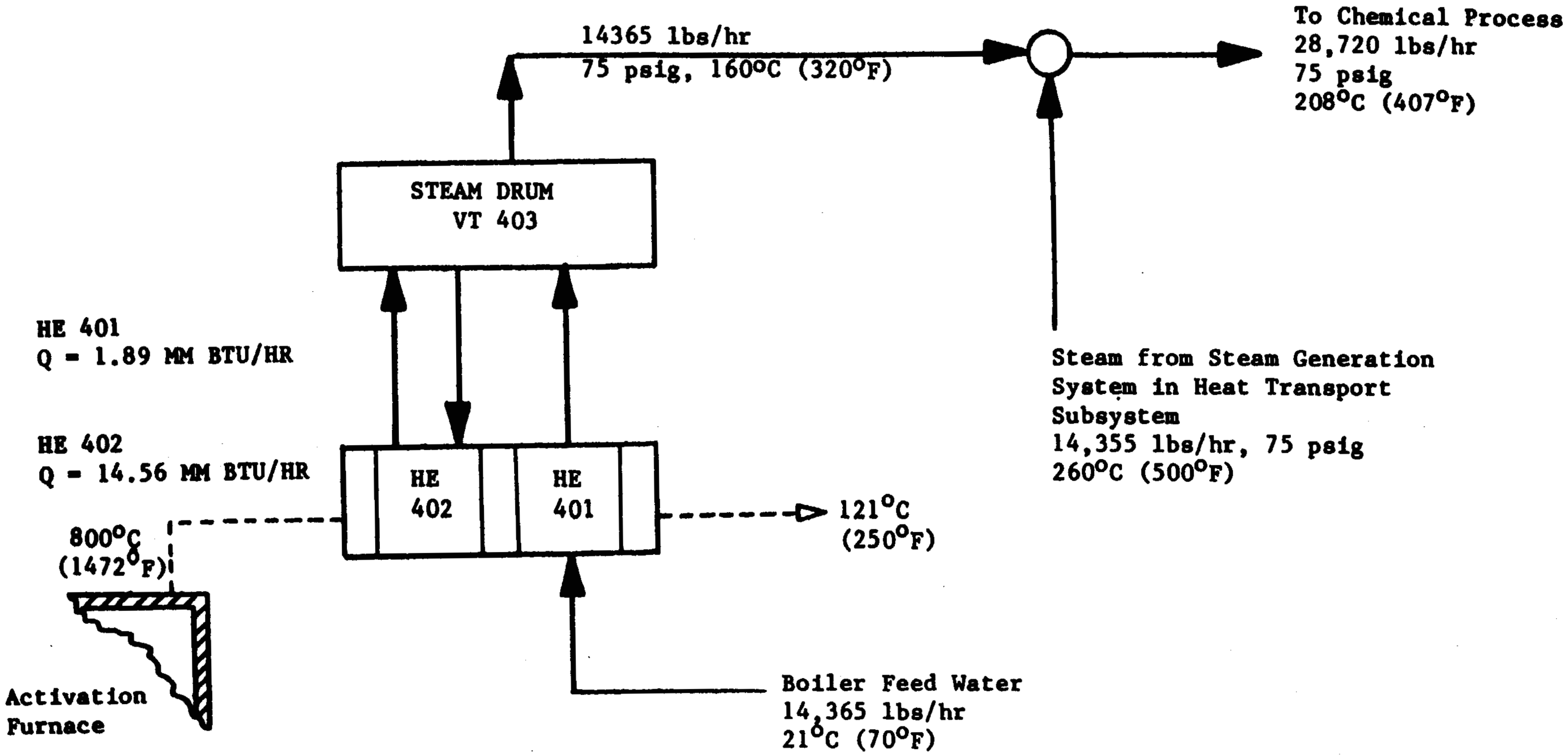

Figure 2-12

TABLE 2-12

HEAT DUTY OF COOLERS

Equipment Name	Location	Heat Duty (MM Btu/Hr)
Product Cooler	Product Classification	1.1
Final Product Cooler	Product Classification	0.7
Combined Off Gas Cooler	Off Gas Cooling and Compression	13.6
Intercooler I	Off Gas Cooling and Compression	2.8
Intercooler II	Off Gas Cooling and Compression	1.3
Intercooler III	Off Gas Cooling and Compression	1.0
Scrubber Water Cooler	Regeneration	5.4
Quench Water Cooler	Regeneration	0.9

TABLE 2-13

WATER USERS

Activation

Equipment	Location	Flow Rate (lb/hr)
Dewaterers	Pretreatment	27,950
Coal Washers	Pretreatment	27,950
Dewaterer	Product Classification	3,250
Product Washer	Product Classification	3,250

Regeneration

Scrubbing Water		12,200
Quench Water		2,600
	Total	77,200

2.2.3 Component Description

2.2.3.1 Chemical Reaction Furnaces

There are three chemical reaction furnaces required in the production and regeneration of activated carbon. They are required for carbonization, activation, and regeneration.

The carbonization furnace is used to form char from coal. The volatile matter found in the raw materials is released from the granular coal/tar mixture. The coal is slowly heated in the absence of air to $600^{\circ}C$ ($1112^{\circ}F$). The total residence time required for carbonization ranges from one to five hours depending on the raw materials used. Typically the coal is heated from ambient temperature to $600^{\circ}C$ at $300^{\circ}C$/hour ($540^{\circ}F$/hr) and maintained at this temperature for two hours.

The activation furnace is used to react the char with steam in order to form the high internal surface area characteristic of activated carbon. Steam is added at a rate of about 2.5 kg/kg of char. The residence time ranges from 3 to 6 hours; the operating temperature is $800^{\circ}C$ ($1472^{\circ}F$).

The regeneration furnace is used to reactivate spent carbon. There are three distinct steps in this furnace: 1. Drying of the wet, spent carbon occurs at $120\text{-}150^{\circ}C$ ($250\text{-}300^{\circ}F$). 2. Baking occurs at $480^{\circ}\text{-}760^{\circ}C$ ($900^{\circ}\text{-}1400^{\circ}F$). 3. Reactivation occurs at temperatures up to $980^{\circ}C$ ($1800^{\circ}F$). Steam is added during the reactivation step to selectively react with the deposited char. The reactivation step residence time is generally between 10 and 15 minutes.

Design Approach

The furnace design is based on the design requirements set forth by the process reactions and heat requirements. Once the operating conditions and reaction parameters were determined, several alternate designs were considered. Conventional activated carbon plants utilize a direct gas-fired design. Our design requires maximum utilization of heat supplied by hot molten carbonate salt. Several variations of conventional furnaces were considered to determine their adaptability to indirect heating with hot molten salt. Conventional furnaces use convection as the main mode of heat transfer. From the furnace designs considered, the best practical design was selected for further development.

Using the selected furnace design, the heat transfer areas for radiant and conductive heat were calculated. Several variations of radiant only verses radiant and conductive were considered. From these calculations, an overall furnace size was determined. The heat transfer surfaces were then arranged to give a minimum pressure drop for a salt velocity range of 0.9-1.5 m/sec (3-5 ft/sec). Calculations were also made to determine the overall furnace heat loss; insulating materials were provided to minimize these losses.

Alternates Considered

Activated carbon is currently produced in natural gas fired furnaces. Heat transfer is provided mainly by means of convection from the combustion gases. Radiation and conduction from the heated furnace bricks also provide additional heat. Conventional furnace types include rotary drum, fluid bed, and multiple hearth. After researching available literature, several meetings were held with Olin Engineers and an outside consultant to discuss the advantages and disadvantages of adapting conventional furnace types with molten salt as a heat transfer medium. Several other potential furnace designs also evolved as a result of these meetings. The list of potential designs was narrowed down to the five following types:

1. Direct Contact
2. Rotary Drum
3. Fluid Bed
4. Multiple Hearth
5. Multiple Plate

A conceptual design was arrived at for each type of furnace, including the mode of heat transfer utilizing carbonate salt. Additional input was provided on materials of construction, control requirements, and start-up and shut-down procedures. The merits of each design were summarized in a table listing the advantages and disadvantages. Each of these furnaces is further discussed below.

Direct Contact would have the pulverized coal or char fed into a vessel containing the molten salt. This intimate mixing would provide optimum heat transfer but requires filtering or separation of the product and by-products from the carbonate salt. The advantages and disadvantages are listed in Table 2-14. This design contains many technical risks and requires extensive research and development.

TABLE 2-14

DIRECT CONTACT FURNACE

Advantages	Disadvantages
Optimum Heat Transfer	Contamination of Salt
Simple Equipment - Low Cost Less Maintenance	Contamination of Product Method of Mixing
Easier Material Selection	Temperature Gradient/Control
	Method of Skimming off Product
	Affects of Steam Addition Unknown
	Unknown Final Product Structure
	Requires Research and Development

Rotary Drum would require the heat to be applied indirectly through the wall in order to maintain an oxygen free atmosphere and maximum heat value of the off-gases. Technology exists for supplying indirect heat with fuel fired burners and also indirect cooling by flowing water over the outside shell. The flow of hot carbonate salt could be channeled to allow separate stages of heating for improved control. The advantages and disadvantages for this design are listed in Table 2-15.

TABLE 2-15

ROTARY DRUM FURNACE

Advantages	Disadvantages
Known Technology	Seal Problems
Separate Stages of Heating	Potential Large Size
Temperature Control	Limited L/D Ratio
	Material of Construction
	Mechanical/Support
	Attrition of Product
	Necking Down of Shell

Some of the inherent problems of rotary drums would be present such as mechanical seals, limited L/D ratio, large space requirements, and attrition of product material. Heat transfer requirements through the wall would not allow refractory brick to be installed as it is a good insulator. The shell material would have to be a composite to account for salt corrosion on the outside, sulfide corrosion on the inside and strength requirements at high temperatures. Typical drums are over fifty feet long and if not supported correctly could have problems with necking down of the shell.

Fluid Beds utilize a hot flue gas to keep the bed in suspension. Double and triple stacked fluid beds are possible to separate stages. Hot carbonate salt could be used in a heat exchanger to heat up the motive gas prior to the fluid bed. The advantages and disadvantages of the fluid bed design are listed in Table 2-16. Ambient air could not be used due to the requirement of an oxygen free atmosphere. Nitrogen or some other inert gas would be expensive and would dilute the off gas resulting in lower heat value. Recirculation of a portion of the off gas would require precooling due to material of construction constraints on the recirculation blower. Horsepower requirements for the blower would be high. Alternate gas for startup would be required.

TABLE 2-16

FLUID BED FURNACE

Advantages	Disadvantages
Improved Heat Transfer Over Rotary Drum	Erosion
Refractory Lined Vessel	Gas Circulation Required (Horsepower, Cooling)
No Internal Moving Parts	Temperature Gradient Within Bed
	Attrition
	Startup Gas Required
	Bed Depth High Enough to Cover Heat Transfer Surface

Multiple Hearth design was based on a conventional furnace with the addition of heat transfer plates installed on top and below each hearth. Heat transfer would be by conduction and radiation as opposed to the conventional method of convection using burner flue gas. Temperature could be controlled on each hearth by adjusting the temperature or flow of the carbonate salt. The retention time of the entire furnace can be adjusted by changing the rotation of the central shaft. The advantages and disadvantages are listed in Table 2-17.

TABLE 2-17

MULTIPLE HEARTH FURNACE

Advantages	Disadvantages
Individual Temperature Control	Possible Plate Erosion
Vary Steam Flow Per Hearth	Maintenance and Repairs
Easier to Seal from Outside Air Leaks	Initial Cost
Layers of Material Will Allow Structure to be Made of Non-Exotic Metals	Heat Loss Through Cooling Air
	Circular/Sloped Heat Channel May Distort
Low Attrition	

Existing multiple hearths circulate ambient air through the center shaft and each rabble arm to provide cooling of the metal. The preheated air is used for combustion. The proposed design will also circulate cooling air but will exhaust it to the atmosphere or use it for combustion in the sulfur recovery incinerator.

Conventional hearths are made of refractory brick and are self supporting in the shape of a dome. The proposed hearth will also be dome shaped to allow self draining of the carbonate salt. The extra weight will require steel support within each hearth. The method of hearth support must be addressed as part of the furnace development plan, as noted in Section 4. The enclosed steel will be baffled to allow cooling air (or liquid) to circulate. Refractory will be placed on the steel followed by the heat transfer plates. The plates will be a composite material to provide strength at high temperatures in addition to resist corrosion of salt fluid (inside) and sulfide gases (outside).

The benefits of a multiple hearth furnace include temperature and steam adjustments possible on each hearth, low attrition of product material, modeled after proven design and performance, and large throughput of material possible. The proposed design will require testing to determine heat transfer rates, plate erosion, and product quality.

<u>Multiple Plate</u> is similar to multiple hearth in that the product cascades from level to level with heat introduced at each "stage". The difference is that the plate will be vibrated with an external force to move the product down an inclined plane. The subsequent plate will reverse direction towards the opposite wall. The advantages and disadvantages are listed in Table 2-18.

TABLE 2-18

MULTIPLE PLATE FURNACE

Advantages	Disadvantages
Externally Serviceable	Seal Required at Each Plate
Multiple Staging	May Require Units in Series With High Temperature Elevator
No Internal Moving Parts	
	Less Efficient Heat Transfer (Radiant)
No Air Cooling of Metal	Blockage of Plate-Rodout Required
Individual Plate Control To Vary Residence Time	Unknown Flowing Characteristics

The design eliminates the mechanical moving parts from inside the multiple hearth furnace and the associated air cooling. The hot carbonate salt will flow through parallel channels located above each plate. Heat transfer will be primarily through radiation. The frequency of each vibrating plate can be changed to vary the residence time. The technical risks concern the flowing characteristics of the coal or char. Radiant heat will be less efficient than the combined conduction/radiant heat transfer of the multiple hearth. The extreme case may require furnaces in series with hot product elevated to each succeeding furnace.

Design Details

Based on the preceeding discussion, the multiple plate and multiple hearth were further evaluated as the two best potential designs. Radiant heat transfer was calculated for concurrent and countercurrent flow. The multiple plate design was ruled out due to the required height (over four hundred feet for the activation furnace). Countercurrent flow in the multiple hearth furnace gave the best results, but the activation furnace would require ten hearths.

The addition of conductive heat panels lowered the required hearth area because one hearth would support both radiant and conductive heat panels. This design will be used for the carbonization and activation furnaces.

The regeneration furnace requires gas fired burners to obtain 954^{o}C (1750^{o}F) reaction temperature. The hearth area required was determined from equations made available from the multiple hearth vendor, Nichols/Herreshoff. The optimum size was then determined combining the gas fired portion with the molten salt heating. The resulting larger diameter gave too high a surface area for the molten salt heat transfer panels. Therefore, only two radiant heat plate coils will be used in the regeneration furnace (top two out of six hearths).

Furnace size was selected based on the smallest number of hearths required. The surface area per hearth available gave the cross sectional area for the plate coils. The arrangement and number of passes were determined to keep the velocity of salt between 0.9 and 1.5 m/sec (3 and 5 ft/sec) and at the same time to minimize the salt pressure drop.

Figure 2-13 shows the proposed multiple hearth design. The platecoil size is based on a standard size available from Tranter, Inc. Modifications to the standard platecoil design will have to be made to make it suitable for the molten salt service. The development plan for these modifications is discussed in Section 4. The hearth is composed of several layers of material. An air-cooled steel base is provided to support the weight of the carbon, salt and platecoil. Insulating castable and mineral wool provide insulation between the hot plate coils and the steel support in order to minimize heat loss.

Solar Fuels and Chemicals System Design Study
PROPOSED HEARTH DETAIL

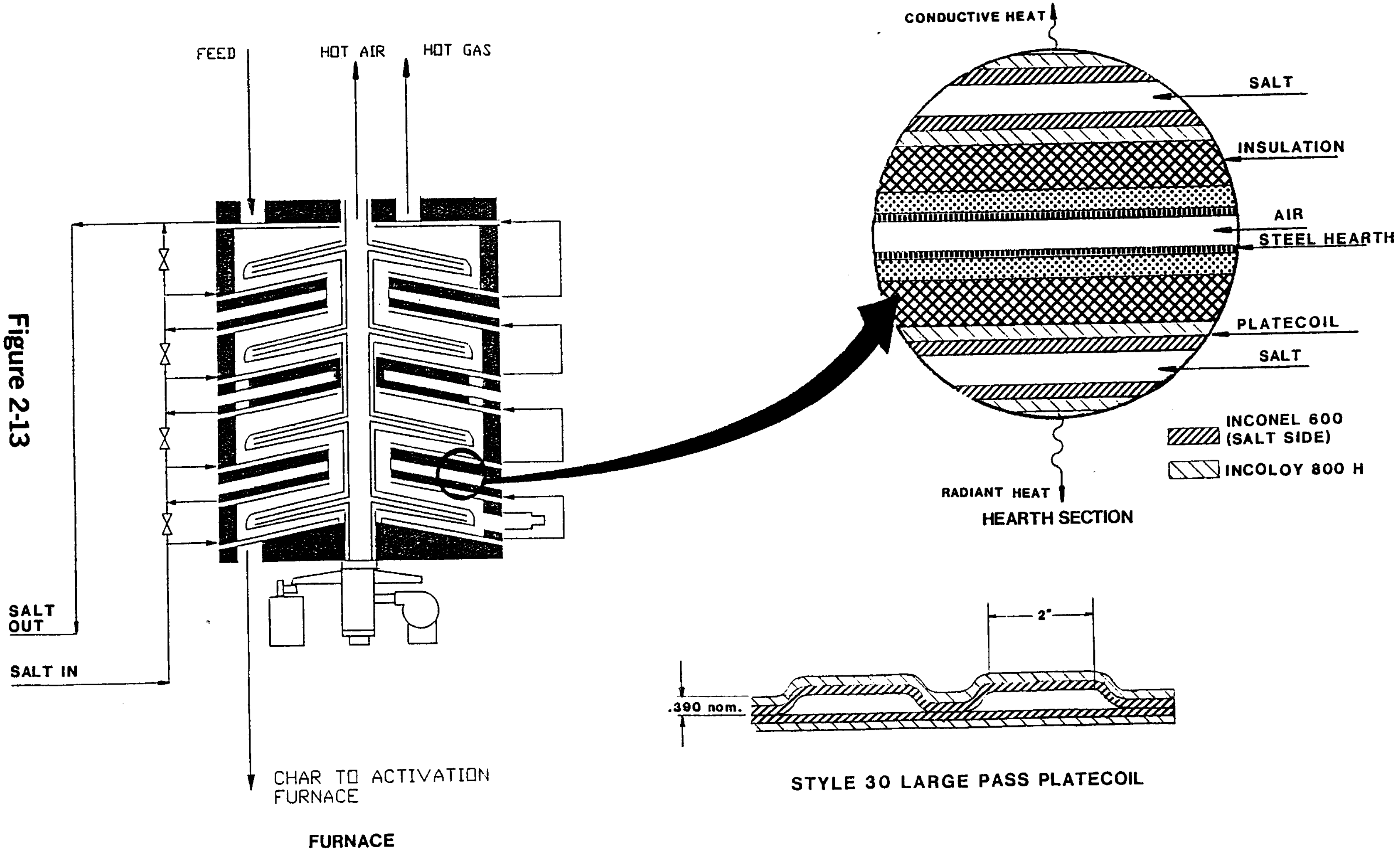

FURNACE

HEARTH SECTION

STYLE 30 LARGE PASS PLATECOIL

Figure 2-13

Table 2-19 summarizes the furnace design for the three chemical reaction furnaces. Tables 2-20 through 2-23 give a more detailed design specification for each of the furnaces. These specifications were used by vendors to provide an estimate of the furnace equipment cost.

The unrecoverable heat losses present in the multiple hearth furnace are:

1. Center rotating shaft and individual rabble arms cooled by forced air flow to reduce metal temperature.
2. Structural steel supporting each hearth cooled by forced air flow.
3. Conduction of heat through walls, roof, and floor to outside air.

Refractory was selected to limit the heat loss. The estimated heat loss from each of these sources was calculated; a summary of these losses for each furnace is shown in Table 2-24.

TABLE 2-19
FURNACE DESIGN - SUMMARY

	Carbonization	Activation	Regeneration	
Total Hearth Area Ft^2	573	2,177	2,177	
Number of Hearths	4	6	6	
Heat Source	Molten Salt	Molten Salt	Molten Salt/ Natural Gas	
Radiant Platecoil	4	6	2	
Conductive Platecoil	4	6	0	
Shell Outside Diameter	16' 9"	25' 9"	25' 9"	
Shell Height	15' 0"	26' 7"	26' 7"	
Overall Height	24'11"	37' 5"	37' 5"	
			Dry	Bake
Heat From Salt, BTU/Hr	15.5×10^6	35.9×10^6	4.9×10^6	1.0×10^6
Total Salt Flow, Lb/Hr	267,820	331,030	63,210	29,322
Hot Salt Temperature, ^{o}F	1,525	1,750	1,362	1,525
Cold Salt Temperature, ^{o}F	1,400	1,525	1,191	1,450
Average Salt Flow, GPM	17.8	12.9	9.6	7.75
Average Salt Velocity, FPS	5.4	4.0	2.9	2.4
Pressure Drop, PSI (Not including pipe, valves & fittings)	8.0	10.2	2.2	2.2

TABLE 2-20

EQUIPMENT SPECIFICATION

CHEMICAL REACTION FURNACES

GENERAL DESCRIPTION

Overall Process:	Production of activated carbon from subbituminous coal and the regeneration of spent activated carbon.
Requirements:	Three furnaces are required (specifications follow) FR-201 Carbonization FR-202 Activation FR-601 Regeneration
General Design:	Conventional multiple hearth furnaces except that molten thermal salt will be used as a heating medium wherever possible.
Unique Features:	1. Molten carbonate salt will flow through platecoils attached to the top and bottom of each hearth to provide conductive and radiant heat to the carbon bed traveling across the hearth. 2. "Hearth Area Required" was determined by heat transfer area of the platecoils, not by product flow. The numbers shown are typical sizes available from multiple hearth vendors. 3. "Shell Outside Diameter" includes extra insulation for high temperature service (total wall thickness of 13-1/2"). 4. "Shell Height" and "Overall Height" have been increased above normal multiple hearth design to allow for the special hearths containing air cooled structural steel for support and molten salt platecoils (see Figure 2-13).

TABLE 2-21
EQUIPMENT SPECIFICATION

CARBONIZATION FURNACE (FR-201)

ITEM: Carbonization Furnace
ITEM NO.: FR-201
NO. REQUIRED: One (1)

FUNCTION: Remove volatiles from pretreated and sized subbituminous coal granules.

OPERATION: Continuous

TYPE: Multiple Hearth Furnace with special hearth design

MATERIALS HANDLED: Volatile material containing water, tar, oil, light hydrocarbons, ammonia, and hydrogen sulfide. Residue essentially dry char.

MECHANICAL DESIGN DATA:

Total Hearth Area Required	573 Ft^2
Number of Hearths	4 (Four)
Shell Outside Diameter	16'9"
Shell Height	15'0"
Overall Height	24'11"

NOTE: Furnace to include forced air cooling of the central shaft, rabble arms and support steel of each hearth. Burners required for start-up only (heat to 900°F).

PROCESS DESIGN DATA:

Furnace Operating Temperature		1112°F	
Feed In:	15188.6 LB/HR	175°F	14.7 psia
Gas Out:	6504.6 LB/HR	932°F	14.7 psia
Product Out:	8684.0 LB/HR	1112°F	14.7 psia

HEATING MEDIUM DESIGN DATA:
Heat Source: Molten Salt
Conditions: 267,820 LB/HR 1525°F In 1400°F Out
Heat Transfer Mode: Radiant and Conductive Platecoils

CONTROLS: Process: Standard Multiple Hearth

TABLE 2-22

EQUIPMENT SPECIFICATION

ACTIVATION FURNACE (FR-202)

ITEM: Activation Furnace
ITEM NO.: FR-202
NO. REQUIRED: One (1)

FUNCTION: React Steam with char to form activated carbon

OPERATION: Continuous

TYPE: Multiple Hearth Furnace with special hearth design

MATERIALS HANDLED: Steam, off-gas (H_2, H_2S, CO, CO_2, and CH_4) and activated carbon

MECHANICAL DESIGN DATA:

Total Hearth Area Required	2177 Ft^2
Number of Hearths	6 (Six)
Shell Outside Diameter	25'9"
Shell Height	26'7"
Overall Height	37'5"

NOTE: Furnace to include forced air cooling of the central shaft, rabble arms and support steel of each hearth. Burners required for start-up only (heat to 900°F).

PROCESS DESIGN DATA:

Furnace Operating Temperature:			1472°F	
Feed In:	8684	LB/HR	1112°F	14.7 psia
Steam In:	21567	LB/HR	407°F	89.7 psia
Gas Out:	26942.5	LB/HR	1472°F	15 psia
Product Out:	3308.5	LB/HR	1472°F	14.7 psia

HEATING MEDIUM DESIGN DATA:
Heat Source: Molten Salt
Conditions 331,030 LB/HR 1750°F In 1525°F Out
Heat Transfer Mode: Radiant and Conductive Platecoils

CONTROLS: Process: Standard Multiple Hearth

TABLE 2-23
EQUIPMENT SPECIFICATION

REGENERATION FURNACE (FR-601)

ITEM: Regeneration Furnace
ITEM NO.: FR-601
NO. REQUIRED: One (1)

FUNCTION: Continuous

TYPE: Multiple Hearth Furnace with special hearth design

MATERIALS HANDLED: Activated carbon, adsorbent, steam, and off-gas (N_2, CO_2, CO, H_2)

MECHANICAL DESIGN DATA:

Total Hearth Area Required	2177 Ft^2
Number of Hearths	6 (Six)
Shell Outside Diameter	25'9"
Shell Height	26'7"
Overall Height	37'5"

NOTE: Furnace to include forced air cooling of the central shaft, rabble arms and support steel of each hearth. Burners required for the bottom four hearths (Reaction temperature of 1750 F).

PROCESS DESIGN DATA:

Furnace Operating Temperature: 250°F, 1400°F, 1750°F

Feed In:	6394 LB/HR (1095 LB/HR Adsorbent)	70°F	15 psia
Steam In:	2800 LB/HR	407°F	89.7 psia
Fuel In:	327 LB/HR		
Air In:	5613 LB/HR		
Gas Out:	12530 LB/HR	500°F	15 psia
Product Out:	2604 LB/HR	1750°F	14.7 psia

HEATING MEDIUM DESIGN DATA:
Heat Source: Molten Salt (Top two hearths), Burner (Others)
Conditions: (Salt): 63,210 LB/HR 1525°F In 1191°F Out
Heat Transfer Mode: Radiant Platecoil

CONTROLS: Process: Standard Multiple Hearth

TABLE 2-24

OVERALL FURNACE HEAT LOSS

	CARBONIZATION	ACTIVATION	REGENERATION
Total Heat Load, BTU/HR.	15.5×10^6	35.9×10^6	12.3×10^6
Heat Loss Cooler Shaft/Rabble Arms	65,500	240,200	442,700
Hearth Cooling	237,800	606,000	645,000
Wall/Floor/Roof	122,000	246,800	246,800
Total Heat Loss	425,300	1,093,000	1,334,500
$\frac{\text{Heat Loss}}{\text{Heat Load}} \times 100$,%	2.75	3.0	10.8

The multiple hearth furnaces can be controlled by changing the rotation of the central shaft and connecting rabble arms. Normally, the speed is between 1 and 3 rpm. The temperature can be varied by manually bypassing the flow of molten salt around each hearth or by resetting the temperature controllers. Figure 2-14 shows the salt flow control scheme for all three. Molten salt from the hot salt storage tank is pumped through the Activation furnace reducing the temperature from 954°C (1750°F) to 829°C (1525°F). A BTU controller will convert the carbon flow entering the furnace to the amount of heat required. The flow rate of molten salt and the change in temperature will compute the heat transferred. Too high a heat transfer for the given carbon flow rate will cause the hot salt to bypass the furnace. The flow of steam can be controlled individually into the four bottom hearths depending on reaction requirements.

The molten salt exiting the Activation furnace is passed on to the Carbonization and Regeneration furnaces. If the temperature is above 829°C (1525°F), cold molten salt from the cold storage tank will be mixed to lower the temperature.

The control of molten salt entering the Carbonization furnace is similar to the Activation controls. The temperature drop is from 829°C (1525°F) to 760°C (1400°F). The exit flow is sent to the steam and electric generation systems.

The Regeneration furnace contains radiant heat panels on the top two hearths. Temperature control is similar to the other furnaces for the salt flowing into the second hearth area (baking section). The exit material is combined with material coming from the off-gas heater which has lowered the salt temperature from 829°C (1525°F) to 696°C (1285°F). The first hearth drops the mix temperature from 739°C (1362°F) to 644°C (1191°F). A temperature sensor between the two hearths will bypass salt flow if required. The bottom four hearths of the Regeneration furnace contain burners to raise the temperature of the carbon to 954°C (1750°F). No molten salt is used on the lower hearths. Typical burner combustion control systems will be utilized. Fuel for the burners can come from the purified off-gases from the Carbonization and Activation furnaces.

Molten salt has a freezing point of 397°C (747°F). Burners will be installed in the Carbonization and Activation furnaces to be used during start-up only. Typical burner controls will be utilized.

2.2.3.2 Equipment Listing

Detailed equipment lists for the chemical process components are shown in Tables 2-25 through 2-31. Materials of construction, flow rates, temperatures, and pressures which govern component size are defined. A general description is also provided for each piece of equipment. The equipment shown for tar recovery, ammonia removal, sulfur removal, and sulfur recovery is approximate. These systems are available as a complete subprocess from several engineering firms, such as Raymond Kaiser Engineers, Inc. The sulfur removal system is a Selexol process from the Norton Company. The sulfur recovery system is a Claus unit.

The process control diagrams are provided in Section 2.7.1.4. These diagrams show all the equipment listed in this Section. Also provided with the process control diagrams are detailed material balances. The following shows the relationship between the process control diagrams and the equipment lists:

Solar Fuels and Chemicals System Design Study

CHEMICAL PROCESS SALT CONTROL

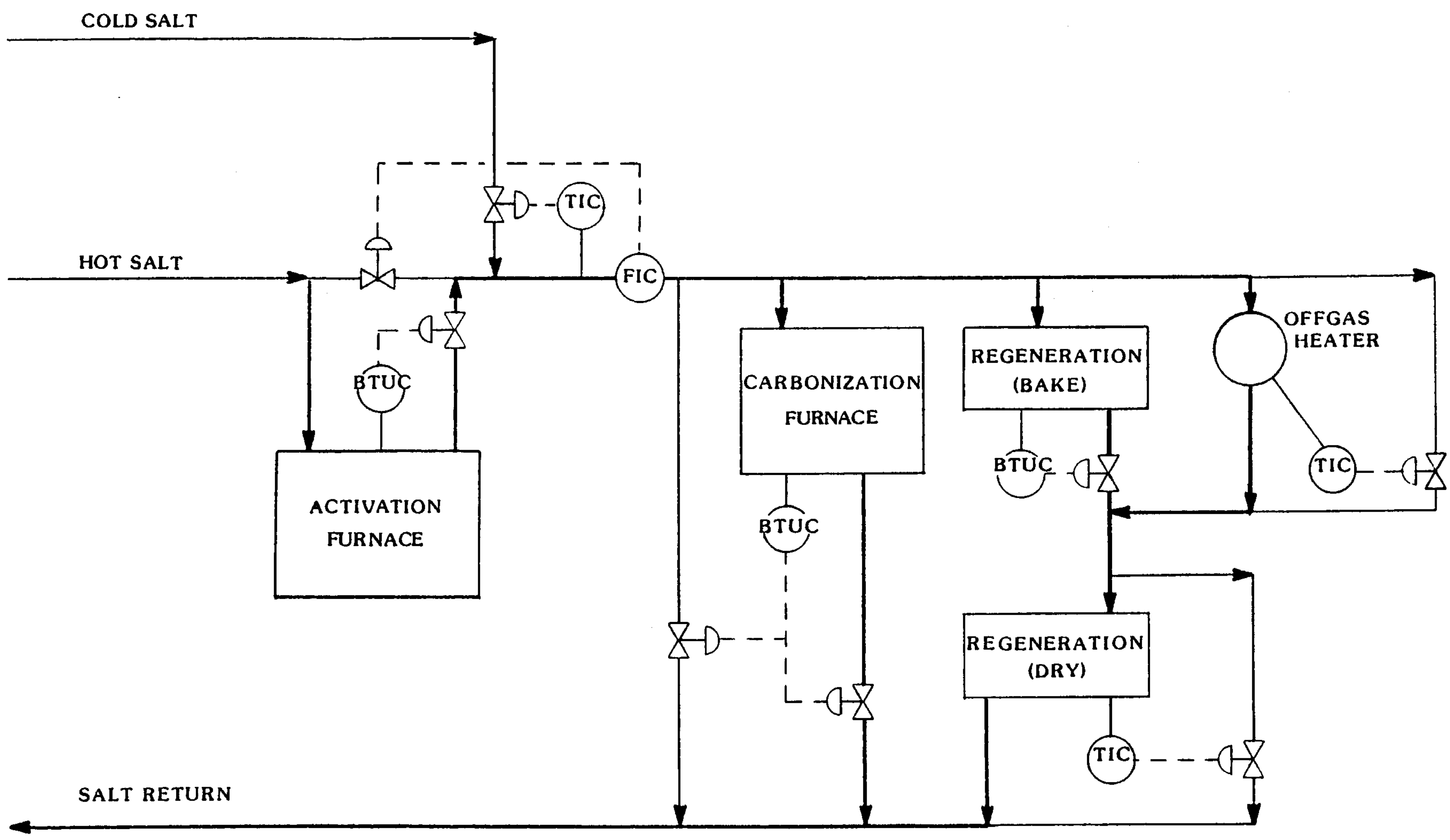

Figure 2-14

Drawing No.	Process Area	Equipment List
B&W -P419-9101-D	Pretreatment	Table 2-25
B&W -P419-9102-D	Carbonization, Activation, and Product Classification	Table 2-26
	Off-Gas Cooling and Compression	Table 2-27
B&W -P419-9103-D	Tar Recovery and Ammonia Removal	Table 2-28
B&W -P419-9104-D	H_2S Removal and Sulfur Recovery	Table 2-29
B&W -P419-9105-D	Regeneration of Spent Carbon	Table 2-30

Table 2-31 lists all the equipment in the process by equipment type. The equipment was numbered according to the following conventions:

Number	Process Area
100	Pretreatment
200	Carbonization, Activation, and Product Classification
300	Tar Recovery and Ammonia Removal
400	Off-Gas Cooling and Compression
500	H_2S Removal and Sulfur Recovery
600	Regeneration of Spent Carbon

Letters	Equipment Type
AG	Agitator
BL	Blender
CN	Conveyor
CP	Pump
CR	Grinder
DC	Dust Collector
ED	Eductor
FE	Feeder
FL	Filter
FN	Fan
FR	Furnace
GC	Compressor
HE	Heat Exchanger
RC	Reactor
SC	Screen
ST	Stack
TW	Tower
VT	Tank

REV. 1 11-21-85	SOLAR FUELS AND CHEMICALS SYSTEM DESIGN STUDY CHEMICAL PROCESS EQUIPMENT LIST BY FLOW	ACTIVATED CARBON PRODUCTION PRETREATMENT PAGE 1 OF 2

ITEM NUMBER	EQUIPMENT NAME	MATERIALS OF CONSTRUCTION	FLOW (LB/HR)	TEMPERATURE (F)	PRESSURE (PSIA)	DESCRIPTION
CN-101	COAL CONVEYOR	CARBON STEEL	14911.7	77	14.7	FROM COAL STORAGE, 1"-5" SIZE, 10-15% MOISTURE
CR-101	COAL CRUSHER	A2 TOOL STEEL OR MART. CR-MO WHITE IRON	14911.7	77	14.7	RAW COAL CRUSHED TO 1" SIZE MAXIMUM
CN-102	COAL BUCKET ELEVATOR	CARBON STEEL	14911.7	77	14.7	TO ELEVATION OF GRINDER
CR-102	COAL GRINDER	A2 TOOL STEEL OR MART. CR-MO WHITE IRON	24852.8	80	14.7	1" SIZE GROUND TO 8 X 30 MESH GRANULES
SC-102	COAL SCREEN	CARBON STEEL	24852.8	80	14.7	40% RECYCLED BACK TO GRINDER
CN-104	COAL BUCKET ELEVATOR	CARBON STEEL	24852.8	80	14.7	TO ELEVATION OF GRINDER
CN-105	COAL CONVEYOR	CARBON STEEL	9941.1	80	14.7	RECYCLE BACK TO GRINDER
CN-106	COAL CONVEYOR	CARBON STEEL	14911.7	80	14.7	FROM SCREEN TO ACID MIXER
1 FE-103	FEEDER/AIRLOCK	CARBON STEEL	14911.7	80	14.7	FEED TO ACID MIXER
FE-101	DUST FEEDER	CARBON STEEL	325.	77	14.7	BOTTOM OF DUST COLLECTOR
DC-101	DUST COLLECTOR	CARBON STEEL	*			CYCLONE, BAGHOUSE OR COMBINATION
FN-101	EXHAUST FAN	CARBON STEEL	*		*	DEPENDS ON AREAS CONTAINED
VT-101	ACID MIXER	316 STAINLESS STEEL	43186.7	176		ONE HOUR RESIDENCE TIME--30% COAL,70% ACID SOLN
AG-101	AGITATOR	CD4MCU				MOUNTED ON ACID MIXER
HE-101	HEATER	CARPENTER 20				764 LB/HR STEAM, IMMERSED COIL IN ACID MIXER
CP-101	SLURRY PUMP	CD4MCU IMPELLER	43186.7	176	*	COAL SLURRY FROM ACID MIXER TO DEWATERER
VT-102	ACID TANK	FRP OR FRP LINED CARBON STEEL	146.3			75% H3PO4 SOLUTION
AG-102	AGITATOR	CF8M				MOUNTED ON ACID TANK
CP-102	ACID PUMP	316 STAINLESS STEEL	146.3	77	*	FROM ACID TANK TO MIXER
SC-103	ACID SOLN DEWATERER	316 STAINLESS STEEL	43186.7	176		SEE FLOW DIAGRAM FOR WATER ADDITION/SEPARATION
SC-104	ACID SOLN DEWATERER	316 STAINLESS STEEL	29422.3	175		DOWN TO 15% MOISTURE
VT-103	COAL WASHER	316 STAINLESS STEEL	15293.9			27950 LB/HR WATER ADDED,ONE HOUR RES TIME
AG-103	AGITATOR	CD4MCU				MOUNTED ON COAL WASHER
CP-103	SLURRY PUMP	CD4MCU IMPELLER,CASING	43243.9	78	*	FROM COAL WASHER TO DEWATERER

* -- NUMBERS DEPEND ON PHYSICAL PLANT LAYOUT
1 -- EQUIPMENT ADDED PER REV. 1

Table 2-25

REV. 1
11-21-85

SOLAR FUELS AND CHEMICALS SYSTEM DESIGN STUDY
CHEMICAL PROCESS
EQUIPMENT LIST BY FLOW

ACTIVATED CARBON PRODUCTION
PRETREATMENT
PAGE 2 OF 2

	ITEM NUMBER	EQUIPMENT NAME	MATERIALS OF CONSTRUCTION	FLOW (LB/HR)	TEMPERATURE (F)	PRESSURE (PSIA)	DESCRIPTION
	SC-105	DEWATERER	CARBON STEEL	43243.9	78		SEE FLOW DIAGRAM FOR SEPARATION
	SC-106	DEWATERER	CARBON STEEL	29479.6	77		SEE FLOW DIAGRAM FOR SEPARATION
	HE-102	DRYER	CARBON STEEL	15293.8	77--212	14.7	DOWN TO 5% MOISTURE, 2090 LB/HR STEAM
	VT-104	PITCH HOPPER	CARBON STEEL	1444.3	120	14.7	ONE HOUR RESIDENCE
1	FE-104	FEEDER/AIRLOCK	CARBON STEEL	1444.3	120	14.7	FEED PITCH TO PULVERIZER
	CR-103	PULVERIZING MILL	CARBON STEEL	21263.6			80% LESS 200 MESH OR 60-65% LESS 325 MESH
	DC-102	DUST COLLECTOR	CARBON STEEL	21262.2			CYCLONE/BAGHOUSE--MATERIAL FROM PULVERIZER
	FN-102	EXHAUST FAN	CARBON STEEL	*		*	DEPENDS ON PHYSICAL LAYOUT
	FE-102	DUST FEEDER	CARBON STEEL	21262.2			BOTTOM OF DUST COLLECTOR
1	VT-107	DEAERATION BIN	CARBON STEEL	21262.2			BETWEEN DUST COLLECTOR AND COMPACTOR
1	FE-105	FEEDER	CARBON STEEL	21262.2			BOTTOM OF DEAERATION BIN
	CR-104	COMPACTOR	CARBON STEEL	21262.2		40--60,000	COMPACT TO PELLETS 1/2" DIA X 1/2" LONG
	CR-105	GRINDER	CARBON STEEL	21262.2			GRIND TO 6 X 20 MESH GRANULES
	SC-107	SCREEN	CARBON STEEL	30374.5	200	14.7	30% RECYCLED BACK TO GRINDER
	CN-112	BUCKET ELEVATOR	CARBON STEEL	21262.2			TO ELEVATION OF GRINDER
	CN-113	CONVEYOR	CARBON STEEL	9112.4	200	14.7	RECYCLE BACK TO GRINDER
	CN-114	CONVEYOR	CARBON STEEL	15186.6	200	14.7	SCREEN TO PULVERIZING MILL
	CN-115	BUCKET ELEVATOR	CARBON STEEL	15186.6	200	14.7	TO ELEVATION OF STORAGE BIN
	VT-105	STORAGE BIN	CARBON STEEL				24 HOUR HOLDING CAPACITY
1	FE-106	FEEDER	CARBON STEEL	15186.6	175	14.7	BOTTOM OF STORAGE BIN
1	CN-117	WEIGH CONVEYOR	CARBON STEEL	15186.6	175	14.7	FEED TO BUCKET ELEVATOR
	CN-116	BUCKET ELEVATOR	CARBON STEEL	15186.6	175	14.7	COAL TO CARBONIZATION FURNACE

* -- NUMBERS DEPEND ON PHYSICAL PLANT LAYOUT
1 -- EQUIPMENT ADDED PER REV. 1

Table 2-25 (con't)

REV. 1
11-21-85

SOLAR FUELS AND CHEMICALS SYSTEM DESIGN STUDY
CHEMICAL PROCESS
EQUIPMENT LIST BY FLOW

ACTIVATED CARBON PRODUCTION
CARBONIZATION,ACTIVATION,PRODUCT CLASSIFICATION
PAGE 1 OF 1

	ITEM NUMBER	EQUIPMENT NAME	MATERIALS OF CONSTRUCTION	FLOW (LB/HR)	TEMPERATURE (F)	PRESSURE (PSIA)	DESCRIPTION
	FR-201	CARBONIZATION FURNACE		15188.6		14.7	1112 F, OXYGEN FREE, 2 HOUR RES TIME
	CN-201	CONVEYOR	316 STAINLESS STEEL	8684.	1112	14.7	BOTTOM OF CARBONIZATION FURNACE TO BUCKET ELEVATOR
	CN-202	BUCKET ELEVATOR	316 STAINLESS STEEL	8684.	1112	14.7	ELEVATE TO ACTIVATION FURNACE
	CN-203	CONVEYOR	316 STAINLESS STEEL	8684.	1112	14.7	FEED ACTIVATION FURNACE
	FR-202	ACTIVATION FURNACE		8684.			1472 F, 21567 LB/HR STEAM ADDED, 4 HOUR RES TIME
1	FE-201	FEEDER	INCOLOY 800H	3308.5	1472	14.7	BOTTOM OF ACTIVATION FURNACE
	CN-204	CONVEYOR	INCOLOY 800H	3308.5	1472	14.7	TO PRODUCT COOLER
	HE-201	PRODUCT COOLER	304 STAINLESS STEEL	3308.5	1472--180	14.7	WATER COOLED CONVEYOR, 1.1 MM BTU/HR
1	CP-204	WATER PUMP					TEMPERED WATER TO DRYER
	CN-205	CONVEYOR	CARBON STEEL	3308.5	180	14.7	PRODUCT COOLER TO ACID MIXER
1	FE-202	FEEDER/AIRLOCK	CARBON STEEL	3308.5	180	14.7	FEED ACID MIXER
	VT-201	ACID MIXER	HAST. C-276 LINED OR ACID BRICK LINED	6494.2	180		ONE HOUR RESIDENCE TIME
	AG-201	AGITATOR	CHLORIMET 3				MOUNTED ON ACID MIXER
	HE-202	HEATER	KBI-10				62 LB/HR STEAM, IMMERSED COIL IN ACID MIXER
	VT-202	ACID DILUTION TANK	FRP	650.7	77		15% HCL SOLUTION
	CP-201	ACID PUMP	TEFLON LINED	650.7	77		FROM ACID DILUTION TO ACID MIXER
	CP-202	SLURRY PUMP	DURICHLOR	6494.2	78	*	FROM ACID MIXER TO DEWATERER
	SC-201	ACID SOLN DEWATERER	HAST.C-276	6494.2	78		SEE FLOW DIAGRAM FOR WATER ADDITION/SEPARATION
	VT-203	PRODUCT WASHER	316 STAINLESS STEEL	3815.9	78		3250 LB/HR WATER ADDED
	AG-203	AGITATOR	CD4MCU				MOUNTED ON PRODUCT WASHER
	CP-203	SLURRY PUMP	CD4MCU IMPELLER	7065.9	78	*	PRODUCT WASHER TO DEWATERER
	SC-202	DEWATERER	316 STAINLESS STEEL	7065.9	78		DOWN TO 15% MOISTURE, SEE FLOW DIAGRAM
	HE-203	PRODUCT DRYER	CARBON STEEL	3815.9	78--212		DOWN TO 2% MOISTURE, 397 LB/HR STEAM
	HE-204	FINAL PRODUCT COOLER	CARBON STEEL	3309.8	212--100		WATER COOLER, 0.7 MM BTU/HR
	SC-203	SCREEN	CARBON STEEL	3309.8	100		SCREEN TO 6 X 20 MESH GRANULES, RECYCLE TO PRETREATMENT
	CN-208	CONVEYOR	CARBON STEEL	3250.	100	14.7	TO PRODUCT STORAGE

* -- NUMBERS DEPEND ON PHYSICAL PLANT LAYOUT
1 -- EQUIPMENT ADDED PER REV. 1

Table 2-26

REV. 1
11-21-85

SOLAR FUELS AND CHEMICALS SYSTEM DESIGN STUDY
CHEMICAL PROCESS
EQUIPMENT LIST BY FLOW

ACTIVATED CARBON PRODUCTION
OFFGAS COOLING AND COMPRESSION
PAGE 1 OF 1

ITEM NUMBER	EQUIPMENT NAME	MATERIALS OF CONSTRUCTION	FLOW (LB/HR)	TEMPERATURE (F)	PRESSURE (PSIA)	DESCRIPTION
DC-401	DUST COLLECTOR	REFRACTORY LINED STEEL	26942.5	1472	35	CYCLONE
FE-401	FEEDER	310 STAINLESS STEEL		1472		BOTTOM OF CYCLONE
HE-402	BFW HEATER	ALUMINUN BRONZE TUBES,CS SHELL	26942.5	400--250		COOL TO 250 F
HE-401	EVAPORATOR	SANDVIK 253 MA TUBES, 316 SS SHELL	26942.5	1472--400		PRODUCE 75 PSIG STEAM
1 VT-403	STEAM DRUM					SEPARATE 75 PSIG STEAM
FN-401	EXHAUST FAN	SANDVIK 253 MA	26942.5	1472		DEPENDS ON PHYSICAL LAYOUT
HE-403	OFFGAS COOLER	316 SS TUBES, 316 SS SHELL	28140.4	242--95	30	WATER COOLED, 13.6 MM BTU/HR
VT-401	KNOCKOUT DRUM	316 STAINLESS STEEL	28140.4	95		REMOVE WATER
GC-401	OFFGAS COMPRESSOR	CF-8M CASE, A-286 ROTOR (150 KSI TS)	16449.5	95	30--350	MULTIPLE STAGE
HE-404	INTERCOOLERS	316 SS TUBES, 316 SS SHELL	16449.5			95 F FINAL EXIT TEMPERATURE, 5.1 MM BTU/HR TOTAL
VT-402	KNOCKOUT DRUM	316 STAINLESS STEEL	16449.5	95		REMOVE WATER

* -- NUMBERS DEPEND ON PHYSICAL PLANT LAYOUT
1 -- EQUIPMENT ADDED PER REV. 1

Table 2-27

REV. 1
11-21-85

SOLAR FUELS AND CHEMICALS SYSTEM DESIGN STUDY
CHEMICAL PROCESS
EQUIPMENT LIST BY FLOW

ACTIVATED CARBON PRODUCTION
TAR RECOVERY/AMMONIA REMOVAL
PAGE 1 OF 1

NOTE: THE EQUIPMENT SHOWN ON THIS PAGE IS APPROXIMATE. THE TAR RECOVERY/AMMONIA REMOVAL SYSTEM IS AVAILABLE AS A COMPLETE SUBPROCESS FROM SEVERAL ENGINEERING FIRMS. ACTUAL EQUIPMENT AND DESIGN INFORMATION SHOULD BE OBTAINED FROM THE SELECTED ENGINEERING FIRM AS A RESULT OF COST INQUIRIES.
(REFER TO PROCESS FLOW DIAGRAMS FOR NECESSARY INLET CONDITIONS)

ITEM NUMBER	EQUIPMENT NAME	MATERIALS OF CONSTRUCTION	FLOW (LB/HR)	TEMPERATURE (F)	PRESSURE (PSIA)	DESCRIPTION
VT-301	QUENCH TANK					
VT-302	DOWNCOMER					
HE-301	PRIMARY COOLER			185--95		
FN-301	EXHAUSTER					10-12 IN WG SUCTION, 50-55 IN WG DISCHARGE
DC-301	TAR PRECIPITATOR					
VT-303	DECANTER					
CP-301	TAR PUMP		2314.	120	14.7	
VT-304	TAR HOLDING TANK					
1 CP-307	TAR PUMP					TAR TO STORAGE AREA
CP-302	DECANT PUMP					
HE-302	FLUSHING LIQUOR COOLER					
VT-305	FLUSHING LIQUOR TANK					
CP-303	FLUSHING LIQUOR PUMP					
VT-306	CRUDE LIQUOR STORAGE					
CP-304	CRUDE LIQUOR PUMP					
VT-307	CAUSTIC LEG					
HE-303	CRUDE LIQUOR STILL					520 LB/HR STEAM
HE-304	PARTIAL CONDENSER					
VT-308	WASTE LIQUOR SUMP					
TW-301	AMMONIA SCRUBBER					
CP-305	SCRUBBER PUMP					
TW-302	AMMONIA SCRUBBER					
CP-306	SCRUBBER RECYCLE PUMP					
HE-305	AMMONIA LIQUOR STILL					520 LB/HR STEAM
HE-306	PARTIAL CONDENSER					
TW-303	LIQUOR COOLING TOWER					

* -- NUMBERS DEPEND ON PHYSICAL PLANT LAYOUT
1 -- EQUIPMENT ADDED PER REV. 1

Table 2-28

REV. 1
11-21-85

SOLAR FUELS AND CHEMICALS SYSTEM DESIGN STUDY
CHEMICAL PROCESS
EQUIPMENT LIST BY FLOW

ACTIVATED CARBON PRODUCTION
H2S REMOVAL AND SULFUR RECOVERY
PAGE 1 OF 1

NOTE: THE EQUIPMENT SHOWN ON THIS PAGE IS APPROXIMATE. THE H2S REMOVAL/SULFUR RECOVERY SYSTEM IS AVAILABLE AS A COMPLETE SUBPROCESS FROM SEVERAL ENGINEERING FIRMS. ACTUAL EQUIPMENT AND DESIGN INFORMATION SHOULD BE OBTAINED FROM THE SELECTED ENGINEERING FIRM AS A RESULT OF COST INQUIRIES.
(REFER TO PROCESS FLOW DIAGRAMS FOR NECESSARY INLET CONDITIONS)

ITEM NUMBER	EQUIPMENT NAME	MATERIALS OF CONSTRUCTION	FLOW (LB/HR)	TEMPERATURE (F)	PRESSURE (PSIA)	DESCRIPTION
HE-501	COOLER					32--36 F EXIT TEMPERATURE
TW-501	H2S ABSORBER					
HE-502	HEAT EXCHANGER					
CP-501	HYDRAULIC TURBINE					
VT-501	HIGH PRESS FLASH DRUM					
GC-501	RECYCLE COMPRESSOR					
HE-503	RECYCLE COOLER					
VT-502	LOW PRESS FLASH DRUM					
TW-502	H2S STRIPPER					
CP-502	RECYCLE PUMP					
HE-504	SOLVENT COOLER			32		
HE-505	STRIPPER CONDENSER					
VT-503	STRIPPER KNOCK OUT POT					
RC-501	THERMAL REACTOR					
FN-501	FAN					
HE-506	WASTE HEAT BOILER					
HE-507	HEATER					
RC-502	CATALYTIC REACTOR					
HE-508	CONDENSER					
VT-504	SULFUR STORAGE					
HE-509	HEATER					
HE-510	CONDENSER					
VT-505	KNOCK OUT POT					
FR-501	INCINERATOR					

* -- NUMBERS DEPEND ON PHYSICAL PLANT LAYOUT
1 -- EQUIPMENT ADDED PER REV. 1

Table 2-29

REV. 1
11-21-85

SOLAR FUELS AND CHEMICALS SYSTEM DESIGN STUDY
CHEMICAL PROCESS
EQUIPMENT LIST BY FLOW

SPENT ACTIVATED CARBON REGENERATION
REGENERATION
PAGE 1 OF 2

	ITEM NUMBER	EQUIPMENT NAME	MATERIALS OF CONSTRUCTION	FLOW (LB/HR)	TEMPERATURE (F)	PRESSURE (PSIA)	DESCRIPTION
	VT-601A,B	SPENT CARBON STORAGE	CARBON STEEL	7674.	70	14.7	TWO TANKS OF DIFFERENT SIZE
1	FE-602A,B	FEEDER	CARBON STEEL	7674.	70	14.7	SPENT ACTIVATED CARBON FROM STORAGE
	ED-601A,B	EDUCTOR	DURIMET 20	26670.	70	40	MOVE SPENT CARBON TO FEED TANK USING WATER
	VT-602	FEED TANK	316 STAINLESS STEEL	26670.	70		FEED TANK FOR REGENERATION FURNACE
1	AG-602	AGITATOR	316 STAINLESS STEEL	26670.	70		AGITATOR FOR FEED TANK
1	FE-603	FEEDER	316 STAINLESS STEEL	26670.	70		TO DEWATERING SCREW
	SC-601	DEWATERING SCREW	CARBON STEEL	26670.	70		REDUCE TO 40% MOISTURE
	VT-603	CRUDE WATER STORAGE	316 STAINLESS STEEL OR ACID BRICK	20286.	70	14.7	RECIRCULATION TANK
	CP-601	CRUDE WATER PUMP	CAST IRON	20286.	70	80	RECIRCULATE TO EDUCTOR
1	FE-604	FEEDER	CARBON STEEL	6394.	70		FEED REGENERATION FURNACE
	FR-601	REGENERATION FURNACE		6394.			DRYING (250-300 F) BAKING (900-1400 F) REGEN (1800 F)
	VT-604	QUENCH TANK	316 STAINLESS STEEL	17004.			BOTTOM OF REGENERATION FURNACE
1	FE-605	FEEDER	316 STAINLESS STEEL				BOTTOM OF QUENCH TANK
	ED-602	PRODUCT EDUCTOR	DURIMET 20	24295.			MOVE REGENERATED CARBON TO STORAGE
	VT-605	REGEN CARBON STORAGE	316 STAINLESS STEEL LINED	24295.	130	14.7	SAME SIZE AS LARGEST SPENT CARBON TANK
	AG-601	AGITATOR					MOUNTED ON REGENERATED CARBON STORAGE TANK
1	FE-606	FEEDER					TO DEWATERING SCREW
	SC-602	DEWATERING SCREW	CARBON STEEL	24295.			REDUCE TO 40--50% MOISTURE
	CP-602	WATER PUMP	CD4MCU IMPELLER	19087.	130	14.7	RECIRCULATE TO PRODUCT EDUCTOR
	FL-602	PRODUCT WATER FILTER	POLYPROPYLENE	21691.	123	80	FILTER RECIRCULATION WATER
	VT-606	PRODUCT WATER STORAGE	316 STAINLESS STEEL OR FRP LINED	21691.	123	14.7	RECIRCULATION TANK
	CP-603	PRODUCT WATER PUMP	CAST IRON	21691.	123	80	RECIRCULATE TO PRODUCT EDUCTOR
	HE-601	PRODUCT WATER COOLER	90-10 CU/NI TUBES, 316 SS SHELL	21691.	123--80	80	COOL RECIRCULATION WATER, 0.9 MM BTU/HR
	CN-602	CONVEYOR	CARBON STEEL	5208.	130	14.7	REGENERATED CARBON TO SHIPPING

* -- NUMBERS DEPEND ON PHYSICAL PLANT LAYOUT
1 -- EQUIPMENT ADDED PER REV. 1

Table 2-30

REV. 1
11-21-85

SOLAR FUELS AND CHEMICALS SYSTEM DESIGN STUDY
CHEMICAL PROCESS
EQUIPMENT LIST BY FLOW

SPENT ACTIVATED CARBON REGENERATION
REGENERATION
PAGE 2 OF 2

ITEM NUMBER	EQUIPMENT NAME	MATERIALS OF CONSTRUCTION	FLOW (LB/HR)	TEMPERATURE (F)	PRESSURE (PSIA)	DESCRIPTION
DC-601	DUST COLLECTOR	CARBON STEEL	12506.	500	25	CYCLONE--REGENERATION FURNACE OFFGAS
FE-601	DUST FEEDER	CARBON STEEL				BOTTOM OF DUST COLLECTOR
HE-602	OFF GAS HEATER	INCONEL 600 TUBES, 304 SS SHELL	12506.	500--1200	25	USE MOLTEN SALT TO PREHEAT WASTE GAS TO INCINERATOR
FR-602	OFFGAS INCINERATOR	REFRACTORY LINED	12503.	1200--1500	20	DISPOSE OF WASTE GAS
TW-601	SCRUBBER	316 STAINLESS STEEL	41444.	1500	20	SCRUB INCINERATOR FLUE GAS
CP-604	SCRUBBER PUMP	CF-8				RECIRCULATE SCRUBBER WATER
1 FL-603	WATER FILTER					FILTER RECIRCULATION WATER
HE-603	SCRUBBER COOLER	90-10 CU/NI TUBES, 316 SS SHELL				COOL SCRUBBER WATER
FN-601	DRAFT FAN	304 STAINLESS STEEL	50245.	175		EXHAUST GAS FROM SCRUBBER TO STACK
ST-601	STACK	304 SS LINED OR ACID BRICK	50245.	175	14.7	DISCHARGE TO ATMOSPHERE

* -- NUMBERS DEPEND ON PHYSICAL PLANT LAYOUT
1 -- EQUIPMENT ADDED PER REV. 1

Table 2-30 (con't)

REV. 1

11-21-85

SOLAR FUELS AND CHEMICALS SYSTEM DESIGN STUDY

CHEMICAL PROCESS

EQUIPMENT LIST BY ITEM

PAGE 1 OF 4

	ITEM NUMBER	EQUIPMENT NAME	MATERIALS OF CONSTRUCTION	FLOW (LB/HR)	TEMPERATURE (F)	PRESSURE (PSIA)	DESCRIPTION
	AG-101	AGITATOR	CD4MCU				MOUNTED ON ACID MIXER
	AG-102	AGITATOR	CF8M				MOUNTED ON ACID TANK
	AG-103	AGITATOR	CD4MCU				MOUNTED ON COAL WASHER
	AG-201	AGITATOR	CHLORIMET 3				MOUNTED ON ACID MIXER
	AG-203	AGITATOR	CD4MCU				MOUNTED ON PRODUCT WASHER
	AG-601	AGITATOR					MOUNTED ON REGENERATED CARBON STORAGE TANK
1	AG-602	AGITATOR	316 STAINLESS STEEL				MOUNTED ON SPENT CARBON FEED TANK
	CN-101	COAL CONVEYOR	CARBON STEEL	14311.7	77	14.7	FROM COAL STORAGE, 1"-5" SIZE, 10-15% MOISTURE
	CN-102	COAL BUCKET ELEVATOR	CARBON STEEL	14911.7	77	14.7	TO ELEVATION OF GRINDER
	CN-104	COAL BUCKET ELEVATOR	CARBON STEEL	24852.8	80	14.7	TO ELEVATION OF GRINDER
	CN-105	COAL CONVEYOR	CARBON STEEL	9941.1	80	14.7	RECYCLE BACK TO GRINDER
	CN-106	COAL CONVEYOR	CARBON STEEL	14911.7	80	14.7	FROM SCREEN TO ACID MIXER
	CN-112	BUCKET ELEVATOR	CARBON STEEL	21262.2			TO ELEVATION OF GRINDER
	CN-113	CONVEYOR	CARBON STEEL	9112.4	200	14.7	RECYCLE BACK TO GRINDER
	CN-114	CONVEYOR	CARBON STEEL	15186.6	200	14.7	SCREEN TO CONVEYOR
	CN-115	CONVEYOR	CARBON STEEL	15186.6	200	14.7	PRODUCT TO STORAGE BIN
	CN-116	BUCKET ELEVATOR	CARBON STEEL	15186.6	175	14.7	COAL TO CARBONIZATION FURNACE
1	CN-117	WEIGH CONVEYOR	CARBON STEEL	15186.6	175	14.7	FEED TO BUCKET ELEVATOR
	CN-201	CONVEYOR	316 STAINLESS STEEL	8684.	1112	14.7	BOTTOM OF CARBONIZATION FURNACE TO BUCKET ELEVATOR
	CN-202	BUCKET ELEVATOR	316 STAINLESS STEEL	8684.	1112	14.7	ELEVATE TO ACTIVATION FURNACE
	CN-203	CONVEYOR	316 STAINLESS STEEL	8684.	1112	14.7	FEED ACTIVATION FURNACE
	CN-204	CONVEYOR	INCOLOY 800H	3308.5	1472	14.7	TO PRODUCT COOLER
	CN-205	CONVEYOR	CARBON STEEL	3308.5	180	14.7	PRODUCT COOLER TO ACID MIXER
	CN-208	CONVEYOR	CARBON STEEL	3250.	100	14.7	TO PRODUCT STORAGE
	CN-602	CONVEYOR	CARBON STEEL	5208.	130	14.7	REGENERATED CARBON TO SHIPPING
	CP-101	SLURRY PUMP	CD4MCU IMPELLER	43186.7	176	*	COAL SLURRY FROM ACID MIXER TO DEWATERER
	CP-102	ACID PUMP	316 STAINLESS STEEL	146.9	77	*	FROM ACID TANK TO MIXER
	CP-103	SLURRY PUMP	CD4MCU IMPELLER, CASING	43243.9	78	*	FROM COAL WASHER TO DEWATERER
	CP-201	ACID PUMP	TEFLON LINED	650.7	77		FROM ACID DILUTION TO ACID MIXER
	CP-202	SLURRY PUMP	DURICHLOR	6494.2	78	*	FROM ACID MIXER TO DEWATERER
	CP-203	SLURRY PUMP	CD4MCU IMPELLER	7065.9	78	*	PRODUCT WASHER TO DEWATERER
1	CP-204	WATER PUMP		2314.	120	14.7	TEMPERED WATER TO DRYER
	CP-301	TAR PUMP					
	CP-302	DECANT PUMP					
	CP-303	FLUSHING LIQUOR PUMP					
	CP-304	CRUDE LIQUOR PUMP					
	CP-305	SCRUBBER PUMP					
	CP-306	SCRUBBER RECYCLE PUMP					
1	CP-307	TAR PUMP					TAR TO STORAGE AREA
	CP-501	HYDRAULIC TURBINE					
	CP-502	RECYCLE PUMP					
	CP-601	CRUDE WATER PUMP	CAST IRON	20286.	70	80	RECIRCULATE TO EDUCTOR
	CP-602	WATER PUMP	CD4MCU IMPELLER	19087.	130	14.7	RECIRCULATE TO PRODUCT EDUCTOR
	CP-603	PRODUCT WATER PUMP	CAST IRON	21691.	123	80	RECIRCULATE TO PRODUCT EDUCTOR
	CP-604	SCRUBBER PUMP	CF-8				RECIRCULATE SCRUBBER WATER
	CR-101	COAL CRUSHER	A2 TOOL STEEL OR MART. CR-MO WHITE IRON	14311.7	77	14.7	RAW COAL CRUSHED TO 1" SIZE MAXIMUM
	CR-102	COAL GRINDER	A2 TOOL STEEL OR MART. CR-MO WHITE IRON	24852.8	80	14.7	1" SIZE GROUND TO 8 X 30 MESH GRANULES
	CR-103	PULVERIZING MILL	CARBON STEEL	21263.6			80% LESS 200 MESH OR 60-65% LESS 325 MESH
	CR-104	COMPACTOR	CARBON STEEL	21262.2		40--60,000	COMPACT TO PELLETS 1/2" DIA X 1/2" LONG
	CR-105	GRINDER	CARBON STEEL	21262.2			GRIND TO 6 X 20 MESH GRANULES
	DC-101	DUST COLLECTOR	CARBON STEEL	*			CYCLONE, BAGHOUSE OR COMBINATION

* -- NUMBERS DEPEND ON PHYSICAL PLANT LAYOUT

1 -- EQUIPMENT ADDED PER REV. 1

100-PRETREATMENT 200-CARBONIZATION,ACTIVATION,PRODUCT CLASSIFICATION 300-TAR RECOVERY 400-OFFGAS COOLING,COMPRESSION 500-H2S REMOVAL,SULFUR RECOVERY 600-REGENERATION

NOTE: 300 AND 500 SERIES EQUIPMENT WILL BE DEFINED BY SUBPROCESS VENDOR.

Table 2-31

REV. 1

11-21-85

SOLAR FUELS AND CHEMICALS SYSTEM DESIGN STUDY

CHEMICAL PROCESS

EQUIPMENT LIST BY ITEM

PAGE 2 OF 4

	ITEM NUMBER	EQUIPMENT NAME	MATERIALS OF CONSTRUCTION	FLOW (LB/HR)	TEMPERATURE (F)	PRESSURE (PSIA)	DESCRIPTION
	DC-102	DUST COLLECTOR	CARBON STEEL	21262.2			CYCLONE/BAGHOUSE--MATERIAL FROM PULVERIZER
	DC-301	TAR PRECIPITATOR					
	DC-401	DUST COLLECTOR	REFRACTORY LINED STEEL	26942.5	1472	35	CYCLONE
	DC-601	DUST COLLECTOR	CARBON STEEL	12506.	500	25	CYCLONE--REGENERATION FURNACE OFFGAS
	ED-601A,B	EDUCTOR	DURIMET 20	26670.	70	40	MOVE SPENT CARBON TO FEED TANK USING WATER
	ED-602	PRODUCT EDUCTOR	DURIMET 20	24295.			MOVE REGENERATED CARBON TO STORAGE
	FE-101	DUST FEEDER	CARBON STEEL	325.	77	14.7	BOTTOM OF DUST COLLECTOR
	FE-102	DUST FEEDER	CARBON STEEL	21262.2			BOTTOM OF DUST COLLECTOR
1	FE-103	FEEDER/AIRLOCK	CARBON STEEL	14911.7	80	14.7	FEED TO ACID MIXER
1	FE-104	FEEDER/AIRLOCK	CARBON STEEL	1444.3	120	14.7	FEED PITCH TO PULVERIZER
1	FE-105	FEEDER	CARBON STEEL	21262.2			BOTTOM OF DEAERATION BIN
1	FE-106	FEEDER	CARBON STEEL	15186.6	175	14.7	BOTTOM OF STORAGE BIN
1	FE-201	FEEDER	INCOLOY 800H	3308.5	1472	14.7	BOTTOM OF ACTIVATION FURNACE
1	FE-202	FEEDER/AIRLOCK	CARBON STEEL	3308.5	180	14.7	FEED ACID MIXER
	FE-401	FEEDER	310 STAINLESS STEEL		1472		BOTTOM OF CYCLONE
	FE-601	DUST FEEDER	CARBON STEEL				BOTTOM OF DUST COLLECTOR
1	FE-602A,B	FEEDER	CARBON STEEL	7674.	70	14.7	SPENT ACTIVATED CARBON FROM STORAGE
1	FE-603	FEEDER	316 STAINLESS STEEL	26670.	70		TO DEWATERING SCREW
1	FE-604	FEEDER	CARBON STEEL	6394.	70		FEED REGENERATION FURNACE
1	FE-605	FEEDER	316 STAINLESS STEEL				BOTTOM OF QUENCH TANK
1	FE-606	FEEDER					TO DEWATERING SCREW
	FL-602	PRODUCT WATER FILTER	POLYPROPYLENE	21691.	123	80	FILTER RECIRCULATION WATER
1	FL-603	WATER FILTER					FILTER RECIRCULATION WATER
	FN-101	EXHAUST FAN	CARBON STEEL	*		*	DEPENDS ON AREAS CONTAINED
	FN-102	EXHAUST FAN	CARBON STEEL	*		*	DEPENDS ON PHYSICAL LAYOUT
	FN-301	EXHAUSTER					10-12 IN WG SUCTION, 50-55 IN WG DISCHARGE
	FN-401	EXHAUST FAN	SANDVIK 253 MA	26942.5	1472		DEPENDS ON PHYSICAL LAYOUT
	FN-501	FAN					
	FN-601	DRAFT FAN	304 STAINLESS STEEL	50245.	175		EXHAUST GAS FROM SCRUBBER TO STACK
	FR-201	CARBONIZATION FURNACE		15188.6		14.7	1112 F, OXYGEN FREE, 2 HOUR RES TIME
	FR-202	ACTIVATION FURNACE		8684.			1472 F, 21567 LB/HR STEAM ADDED, 4 HOUR RES TIME
	FR-501	INCINERATOR					
	FR-601	REGENERATION FURNACE		6394.			DRYING (250-300 F) BAKING (900-1400 F) REGEN (1800 F)
	FR-602	OFFGAS INCINERATOR	REFRACTORY LINED	12503.	1200--1500	20	DISPOSE OF WASTE GAS
	GC-401	OFFGAS COMPRESSOR	CF-8M CASE, A-286 ROTOR (150 KSI TS)	16449.5	95	30--350	MULTIPLE STAGE
	GC-501	RECYCLE COMPRESSOR					
	HE-101	HEATER	CARPENTER 20				764 LB/HR STEAM, IMMERSED COIL IN ACID MIXER
	HE-102	DRYER	CARBON STEEL	15293.8	77--212	14.7	DOWN TO 5% MOISTURE, 2090 LB/HR STEAM
	HE-201	PRODUCT COOLER	304 STAINLESS STEEL	3308.5	1472--180	14.7	WATER COOLED CONVEYOR, 1.1 MM BTU/HR
	HE-202	HEATER	KBI-10				62 LB/HR STEAM, IMMERSED COIL IN ACID MIXER
	HE-203	PRODUCT DRYER	CARBON STEEL	3815.9	78--212		DOWN TO 2% MOISTURE, 397 LB/HR STEAM
	HE-204	FINAL PRODUCT COOLER	CARBON STEEL	3309.8	212--100		WATER COOLER, 0.7 MM BTU/HR
	HE-301	PRIMARY COOLER			185--95		
	HE-302	FLUSHING LIQUOR COOLER					
	HE-303	CRUDE LIQUOR STILL					520 LB/HR STEAM
	HE-304	PARTIAL CONDENSER					
	HE-305	AMMONIA LIQUOR STILL					520 LB/HR STEAM
	HE-306	PARTIAL CONDENSER					
	HE-401	EVAPORATOR	SANDVIK 253 MA TUBES, 316 SS SHELL	26942.5	1472--400		PRODUCE 75 PSIG STEAM
	HE-402	BFW HEATER	ALUMINUN BRONZE TUBES,CS SHELL	26942.5	400--250		COOL TO 250 F

* -- NUMBERS DEPEND ON PHYSICAL PLANT LAYOUT
1 -- EQUIPMENT ADDED PER REV. 1

100-PRETREATMENT 200-CARBONIZATION,ACTIVATION,PRODUCT CLASSIFICATION 300-TAR RECOVERY 400-OFFGAS COOLING,COMPRESSION 500-H2S REMOVAL,SULFUR RECOVERY 600-REGENERATION

NOTE: 300 AND 500 SERIES EQUIPMENT WILL BE DEFINED BY SUBPROCESS VENDOR.

Table 2-31 (con't)

REV. 1
11-21-85

SOLAR FUELS AND CHEMICALS SYSTEM DESIGN STUDY
CHEMICAL PROCESS
EQUIPMENT LIST BY ITEM

PAGE 3 OF 4

ITEM NUMBER	EQUIPMENT NAME	MATERIALS OF CONSTRUCTION	FLOW (LB/HR)	TEMPERATURE (F)	PRESSURE (PSIA)	DESCRIPTION
HE-403	OFFGAS COOLER	316 SS TUBES, 316 SS SHELL	28140.4	242--95	30	WATER COOLED, 13.6 MM BTU/HR
HE-404	INTERCOOLERS	316 SS TUBES, 316 SS SHELL	16449.5			95 F FINAL EXIT TEMPERATURE, 5.1 MM BTU/HR TOTAL
HE-501	COOLER					32--36 F EXIT TEMPERATURE
HE-502	HEAT EXCHANGER					
HE-503	RECYCLE COOLER					
HE-504	SOLVENT COOLER			32		
HE-505	STRIPPER CONDENSER					
HE-506	WASTE HEAT BOILER					
HE-507	HEATER					
HE-508	CONDENSER					
HE-509	HEATER					
HE-510	CONDENSER					
HE-601	PRODUCT WATER COOLER	90-10 CU/NI TUBES, 316 SS SHELL	21691.	123--80	80	COOL RECIRCULATION WATER, 0.9 MM BTU/HR
HE-602	OFF GAS HEATER	INCONEL 600 TUBES, 304 SS SHELL	12506.	500--1200	25	USE MOLTEN SALT TO PREHEAT WASTE GAS TO INCINERATOR
HE-603	SCRUBBER COOLER	90-10 CU/NI TUBES, 316 SS SHELL				COOL SCRUBBER WATER
RC-501	THERMAL REACTOR					
RC-502	CATALYTIC REACTOR					
SC-102	COAL SCREEN	CARBON STEEL	24852.8	80	14.7	40% RECYCLED BACK TO GRINDER
SC-103	ACID SOLN DEWATERER	316 STAINLESS STEEL	43186.7	176		SEE FLOW DIAGRAM FOR WATER ADDITION/SEPARATION
SC-104	ACID SOLN DEWATERER	316 STAINLESS STEEL	29422.3	175		DOWN TO 15% MOISTURE
SC-105	DEWATERER	CARBON STEEL	43243.9	78		SEE FLOW DIAGRAM FOR SEPARATION
SC-106	DEWATERER	CARBON STEEL	29479.6	77		SEE FLOW DIAGRAM FOR SEPARATION
SC-107	SCREEN	CARBON STEEL	30374.5	200	14.7	30% RECYCLED BACK TO GRINDER
SC-201	ACID SOLN DEWATERER	HAST.C-276	6494.2	78		SEE FLOW DIAGRAM FOR WATER ADDITION/SEPARATION
SC-202	DEWATERER	316 STAINLESS STEEL	7065.9	78		DOWN TO 15% MOISTURE, SEE FLOW DIAGRAM
SC-203	SCREEN	CARBON STEEL	3309.8	100		SCREEN TO 6 X 20 MESH GRANULES, RECYCLE TO PRETREATMENT
SC-601	DEWATERING SCREW	CARBON STEEL	26670.	70		REDUCE TO 40% MOISTURE
SC-602	DEWATERING SCREW	CARBON STEEL	24235.			REDUCE TO 40--50% MOISTURE
ST-601	STACK	304 SS LINED OR ACID BRICK	50245.	175	14.7	DISCHARGE TO ATMOSPHERE
TW-301	AMMONIA SCRUBBER					
TW-302	AMMONIA SCRUBBER					
TW-303	LIQUOR COOLING TOWER					
TW-501	H_2S ABSORBER					
TW-502	H_2S STRIPPER					
TW-601	SCRUBBER	316 STAINLESS STEEL	41444.	1500	20	SCRUB INCINERATOR FLUE GAS
VT-101	ACID MIXER	316 STAINLESS STEEL	43186.7	176		ONE HOUR RESIDENCE TIME--30% COAL,70% ACID SOLN
VT-102	ACID TANK	FRP OR FRP LINED CARBON STEEL	146.3			75% H_3PO_4 SOLUTION
VT-103	COAL WASHER	316 STAINLESS STEEL	15293.9			27950 LB/HR WATER ADDED,ONE HOUR RES TIME
VT-104	PITCH HOPPER	CARBON STEEL	1444.3	120	14.7	ONE HOUR RESIDENCE
VT-105	STORAGE BIN	CARBON STEEL				24 HOUR HOLDING CAPACITY
1 VT-107	DEAERATION BIN	CARBON STEEL	21262.2			BETWEEN DUST COLLECTOR AND COMPACTOR
VT-201	ACID MIXER	HAST. C-276 LINED OR ACID BRICK LINED	6494.2	180		ONE HOUR RESIDENCE TIME
VT-202	ACID DILUTION TANK	FRP	650.7	77		15% HCL SOLUTION
VT-203	PRODUCT WASHER	316 STAINLESS STEEL	3815.9	78		3250 LB/HR WATER ADDED
VT-301	QUENCH TANK					
VT-302	DOWNCOMER					
VT-303	DECANTER					
VT-304	TAR HOLDING TANK					
VT-305	FLUSHING LIQUOR TANK					
VT-306	CRUDE LIQUOR STORAGE					

* -- NUMBERS DEPEND ON PHYSICAL PLANT LAYOUT
1 -- EQUIPMENT ADDED PER REV. 1

100-PRETREATMENT 200-CARBONIZATION,ACTIVATION,PRODUCT CLASSIFICATION 300-TAR RECOVERY 400-OFFGAS COOLING,COMPRESSION 500-H_2S REMOVAL,SULFUR RECOVERY 600-REGENERATION

NOTE: 300 AND 500 SERIES EQUIPMENT WILL BE DEFINED BY SUBPROCESS VENDOR.

Table 2-31 (con't)

REV. 1
11-21-85

SOLAR FUELS AND CHEMICALS SYSTEM DESIGN STUDY
CHEMICAL PROCESS
EQUIPMENT LIST BY ITEM

PAGE 4 OF 4

ITEM NUMBER	EQUIPMENT NAME	MATERIALS OF CONSTRUCTION	FLOW (LB/HR)	TEMPERATURE (F)	PRESSURE (PSIA)	DESCRIPTION
VT-307	CAUSTIC LEG					
VT-308	WASTE LIQUOR SUMP					
VT-401	KNOCKOUT DRUM	316 STAINLESS STEEL	28140.4	95		REMOVE WATER
VT-402	KNOCKOUT DRUM	316 STAINLESS STEEL	16449.5	95		REMOVE WATER
1 VT-403	STEAM DRUM					SEPARATE 75 PSIG STEAM
VT-501	HIGH PRESS FLASH DRUM					
VT-502	LOW PRESS FLASH DRUM					
VT-503	STRIPPER KNOCK OUT POT					
VT-504	SULFUR STORAGE					
VT-505	KNOCK OUT POT					
VT-601A,B	SPENT CARBON STORAGE	CARBON STEEL	7674.	70	14.7	TWO TANKS OF DIFFERENT SIZE
VT-602	FEED TANK	316 STAINLESS STEEL	26670.	70		FEED TANK FOR REGENERATION FURNACE
VT-603	CRUDE WATER STORAGE	316 STAINLESS STEEL OR ACID BRICK	20286.	70	14.7	RECIRCULATION TANK
VT-604	QUENCH TANK	316 STAINLESS STEEL	17004.			BOTTOM OF REGENERATION FURNACE
VT-605	REGEN CARBON STORAGE	316 STAINLESS STEEL LINED	24235.	130	14.7	SAME SIZE AS LARGEST SPENT CARBON TANK
VT-606	PRODUCT WATER STORAGE	316 STAINLESS STEEL OR FRP LINED	21691.	123	14.7	RECIRCULATION TANK

* -- NUMBERS DEPEND ON PHYSICAL PLANT LAYOUT
1 -- EQUIPMENT ADDED PER REV. 1

100-PRETREATMENT 200-CARBONIZATION,ACTIVATION,PRODUCT CLASSIFICATION 300-TAR RECOVERY 400-OFFGAS COOLING,COMPRESSION 500-H2S REMOVAL,SULFUR RECOVERY 600-REGENERATION

NOTE: 300 AND 500 SERIES EQUIPMENT WILL BE DEFINED BY SUBPROCESS VENDOR.

Table 2-31 (con't)

2.3 Solar Heat Transport Subsystem

2.3.1 Subsystem Description

The solar heat transport subsystem provides energy input to the molten carbonate salt which transports that energy for use in the chemical process subsystem and in the steam generator. The major components and their arrangement within the subsystem are shown on the Conceptual Plant Layout (Figure 2-5).

The subsystem provides energy input to the carbonate salt on a 24 hour basis through the use of either the solar receiver or the fossil fired salt heater. During periods of receiver operation, the salt storage tanks decouple the operation of the chemical process from receiver operation. Through a combination of plant operating strategy and receiver sizing, hot salt inventory is accumulated in the hot salt storage tank which permits the continuing operation of the chemical process during cloud transients without the need to cycle the operation of the fossil fired salt heater.

The steam generator portion of the solar heat transport subsystem uses energy input from the carbonate salt to generate steam both for the generation of electrical energy and for the process requirements in the chemical subsystem. The major components of the steam generator subsystem include the intermediate heat exchanger, the evaporator, the superheater, and the steam drum. The intermediate heat exchanger transfers energy from the carbonate salt to an intermediate molten nitrate salt loop. The nitrate salt loop operates at lower temperatures than the carbonate salt, permitting the design of evaporator and superheater heat exchangers which have reasonable salt-to-water temperature differences.

A system of pumps, piping, and valves connects the various components to regulate the flow of molten salt and water/steam through the subsystem and to provide the required salt flow to the chemical process subsystem. These flow paths are shown conceptually on Figure 2-5 and in detail on the Piping and Instrumentation Diagrams (Figures 2-15 and 2-16). Figures 2-17 and 2-18 present the fluid temperatures and flows and the rated heat loads of the components.

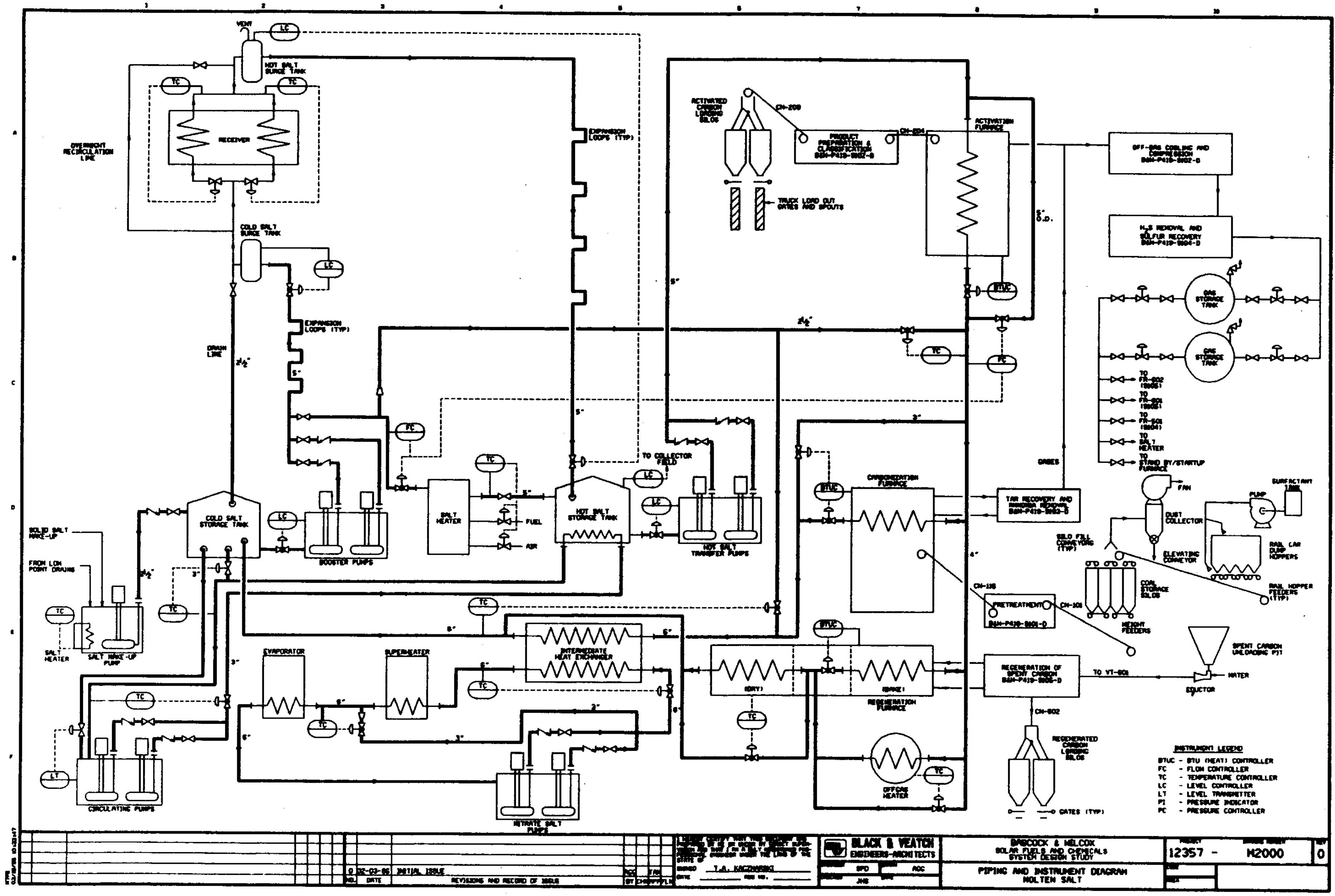
VENT
LC
HOT SALT SURGE TANK
TC
RECEIVER
OVERNIGHT RECIRCULATION LINE
COLD SALT SURGE TANK
DRAIN LINE
2½"
EXPANSION LOOPS (TYP)
5"
FC
SALT HEATER
FUEL
AIR
HOT SALT STORAGE TANK
TO COLLECTOR FIELD
HOT SALT TRANSFER PUMPS
BOOSTER PUMPS
COLD SALT STORAGE TANK
SOLID SALT MAKE-UP
FROM LOW POINT DRAINS
SALT HEATER
SALT MAKE-UP PUMP
LT
CIRCULATING PUMPS
EVAPORATOR
SUPERHEATER
INTERMEDIATE HEAT EXCHANGER
NITRATE SALT PUMPS
6"
8"
3"
2"
ACTIVATED CARBON LOADING SILOS
CM-209
TRUCK LOAD OUT GATES AND SPOUTS
PRODUCT PREPARATION & CLASSIFICATION
CM-204
ACTIVATION FURNACE
5" O.D.
BTUC
PC
OFF-GAS COOLING AND COMPRESSION
H₂S REMOVAL AND SULFUR RECOVERY
GAS STORAGE TANK
TO STAND BY/STARTUP FURNACE
GASES
CARBONIZATION FURNACE
TAR RECOVERY AND AMMONIA REMOVAL
4"
CM-105
PRETREATMENT
CM-101
SILO FILL CONVEYORS (TYP)
COAL STORAGE SILOS
WEIGHT FEEDERS
DUST COLLECTOR
FAN
ELEVATING CONVEYOR
PUMP
SURFACTANT TANK
RAIL CAR DUMP HOPPERS
RAIL HOPPER FEEDERS (TYP)
(DRY)
(BAKE)
REGENERATION FURNACE
OFFGAS HEATER
REGENERATION OF SPENT CARBON
TO VT-601
SPENT CARBON UNLOADING PIT
WATER
EDUCTOR
CM-602
REGENERATED CARBON LOADING SILOS
GATES (TYP)
INSTRUMENT LEGEND
BTUC - BTU (HEAT) CONTROLLER
FC - FLOW CONTROLLER
TC - TEMPERATURE CONTROLLER
LC - LEVEL CONTROLLER
LT - LEVEL TRANSMITTER
PI - PRESSURE INDICATOR
PC - PRESSURE CONTROLLER
0 02-03-86 INITIAL ISSUE
REVISIONS AND RECORD OF ISSUE
T.A. KACZMARSKI
SPD
ACC
JMS
BLACK & VEATCH ENGINEERS-ARCHITECTS
BABCOCK & WILCOX
SOLAR FUELS AND CHEMICALS SYSTEM DESIGN STUDY
PIPING AND INSTRUMENT DIAGRAM
MOLTEN SALT
12357 - M2000
0

Figure 2-15

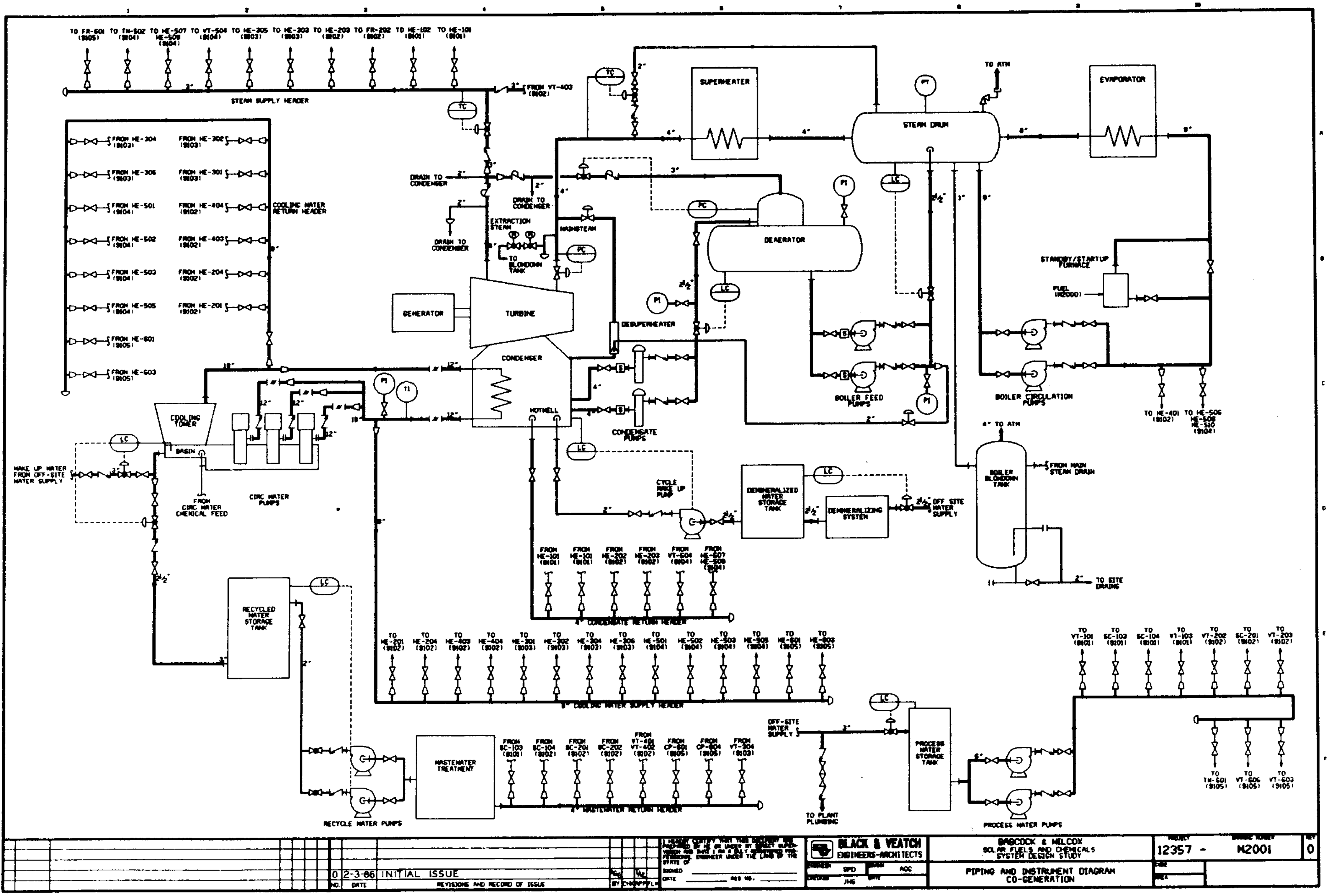
TO FR-601 (9105)
TO TM-502 (9104)
TO HE-507 HE-509 (9104)
TO VT-504 (9104)
TO HE-305 (9103)
TO HE-303 (9103)
TO HE-203 (9102)
TO FR-202 (9102)
TO HE-102 (9101)
TO HE-101 (9101)
STEAM SUPPLY HEADER
FROM VT-403 (9102)
TC
FROM HE-304 (9103)
FROM HE-302 (9103)
FROM HE-306 (9103)
FROM HE-301 (9103)
FROM HE-501 (9104)
FROM HE-404 (9102)
COOLING WATER RETURN HEADER
FROM HE-502 (9104)
FROM HE-403 (9102)
FROM HE-503 (9104)
FROM HE-204 (9102)
FROM HE-505 (9104)
FROM HE-201 (9102)
FROM HE-601 (9105)
FROM HE-603 (9105)
DRAIN TO CONDENSER
EXTRACTION STEAM
TO BLOWDOWN TANK
MAINSTEAM
PC
GENERATOR
TURBINE
CONDENSER
HOTWELL
DESUPERHEATER
SUPERHEATER
STEAM DRUM
TO ATM
EVAPORATOR
DEAERATOR
PI
LC
TI
STANDBY/STARTUP FURNACE
FUEL (H2000)
BOILER FEED PUMPS
BOILER CIRCULATION PUMPS
TO HE-401 (9102)
TO HE-506 HE-508 HE-510 (9104)
4" TO ATM
BOILER BLOWDOWN TANK
FROM MAIN STEAM DRUM
TO SITE DRAINS
CONDENSATE PUMPS
CYCLE MAKE UP PUMP
DEMINERALIZED WATER STORAGE TANK
DEMINERALIZING SYSTEM
OFF SITE WATER SUPPLY
COOLING TOWER
BASIN
MAKE UP WATER FROM OFF-SITE WATER SUPPLY
FROM CIRC WATER CHEMICAL FEED
CIRC WATER PUMPS
FROM HE-101 (9101)
FROM HE-101 (9101)
FROM HE-202 (9102)
FROM HE-203 (9102)
FROM VT-604 (9104)
FROM HE-507 HE-509 (9104)
4" CONDENSATE RETURN HEADER
RECYCLED WATER STORAGE TANK
TO HE-201 (9102)
TO HE-204 (9102)
TO HE-403 (9102)
TO HE-404 (9102)
TO HE-301 (9103)
TO HE-302 (9103)
TO HE-304 (9103)
TO HE-306 (9103)
TO HE-501 (9104)
TO HE-502 (9104)
TO HE-503 (9104)
TO HE-505 (9104)
TO HE-601 (9105)
TO HE-603 (9105)
8" COOLING WATER SUPPLY HEADER
RECYCLE WATER PUMPS
WASTEWATER TREATMENT
FROM SC-103 (9101)
FROM SC-104 (9101)
FROM SC-201 (9102)
FROM SC-202 (9102)
FROM VT-401 VT-402 (9102)
FROM CP-601 (9105)
FROM CP-604 (9105)
FROM VT-304 (9103)
8" WASTEWATER RETURN HEADER
OFF-SITE WATER SUPPLY
TO PLANT PLUMBING
PROCESS WATER STORAGE TANK
PROCESS WATER PUMPS
TO VT-101 (9101)
TO SC-103 (9101)
TO SC-104 (9101)
TO VT-103 (9101)
TO VT-202 (9102)
TO SC-201 (9102)
TO VT-203 (9102)
TO TM-601 (9105)
TO VT-606 (9105)
TO VT-603 (9105)
0 2-3-86 INITIAL ISSUE
NO. DATE REVISIONS AND RECORD OF ISSUE
BY
I HEREBY CERTIFY THAT THIS DOCUMENT WAS PREPARED BY ME OR UNDER MY DIRECT SUPERVISION AND THAT I AM A DULY REGISTERED PROFESSIONAL ENGINEER UNDER THE LAWS OF THE STATE OF
SIGNED
DATE
REG NO.
BLACK & VEATCH ENGINEERS-ARCHITECTS
DESIGNED SPD
DRAWN ACC
CHECKED JHG
DATE
BABCOCK & WILCOX
SOLAR FUELS AND CHEMICALS SYSTEM DESIGN STUDY
PIPING AND INSTRUMENT DIAGRAM CO-GENERATION
PROJECT 12357 -
DRAWING NUMBER M2001
REV 0

Figure 2-16

Solar Heat Transport Subsystem Schematic

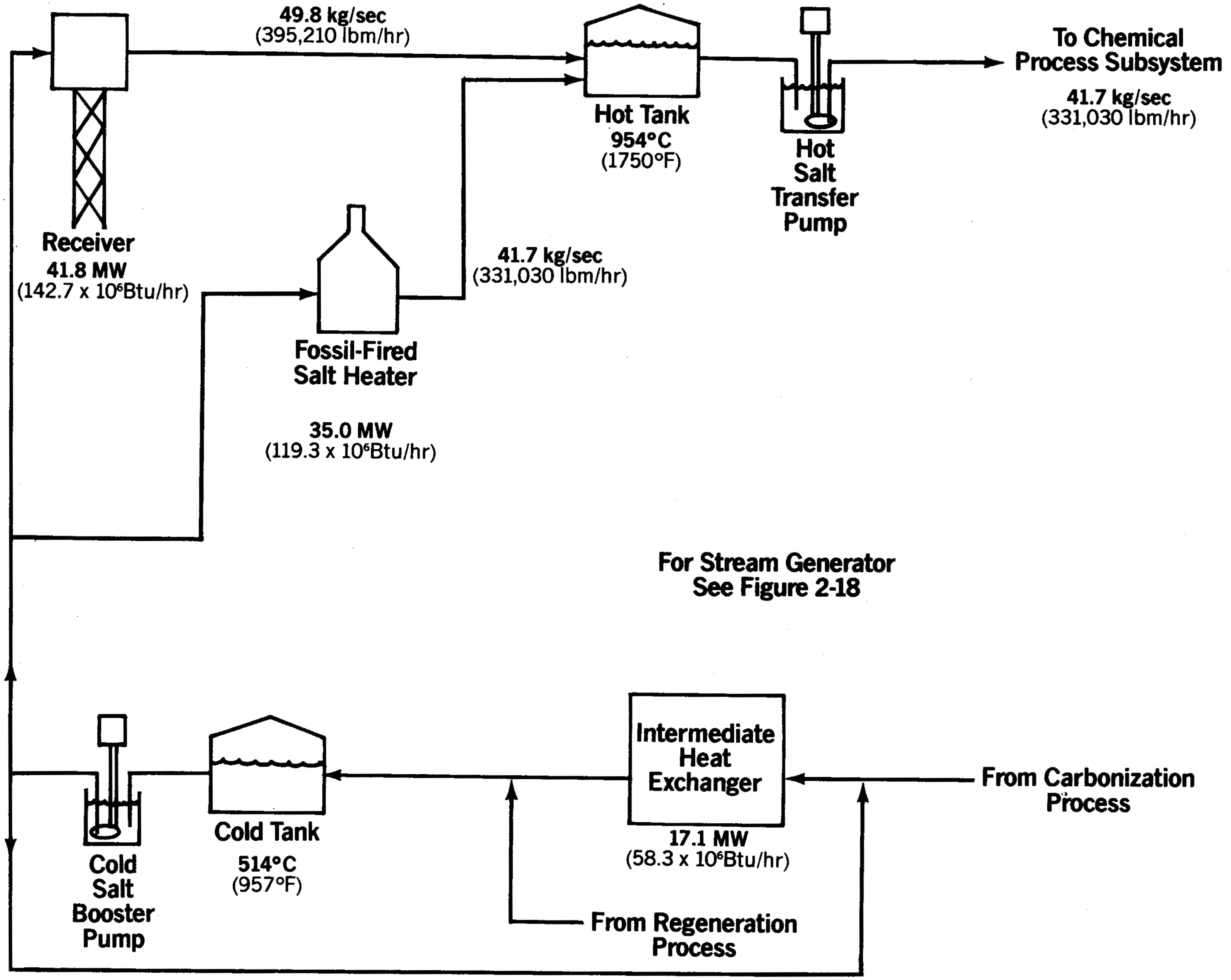

Figure 2-17

Steam Generator Schematic

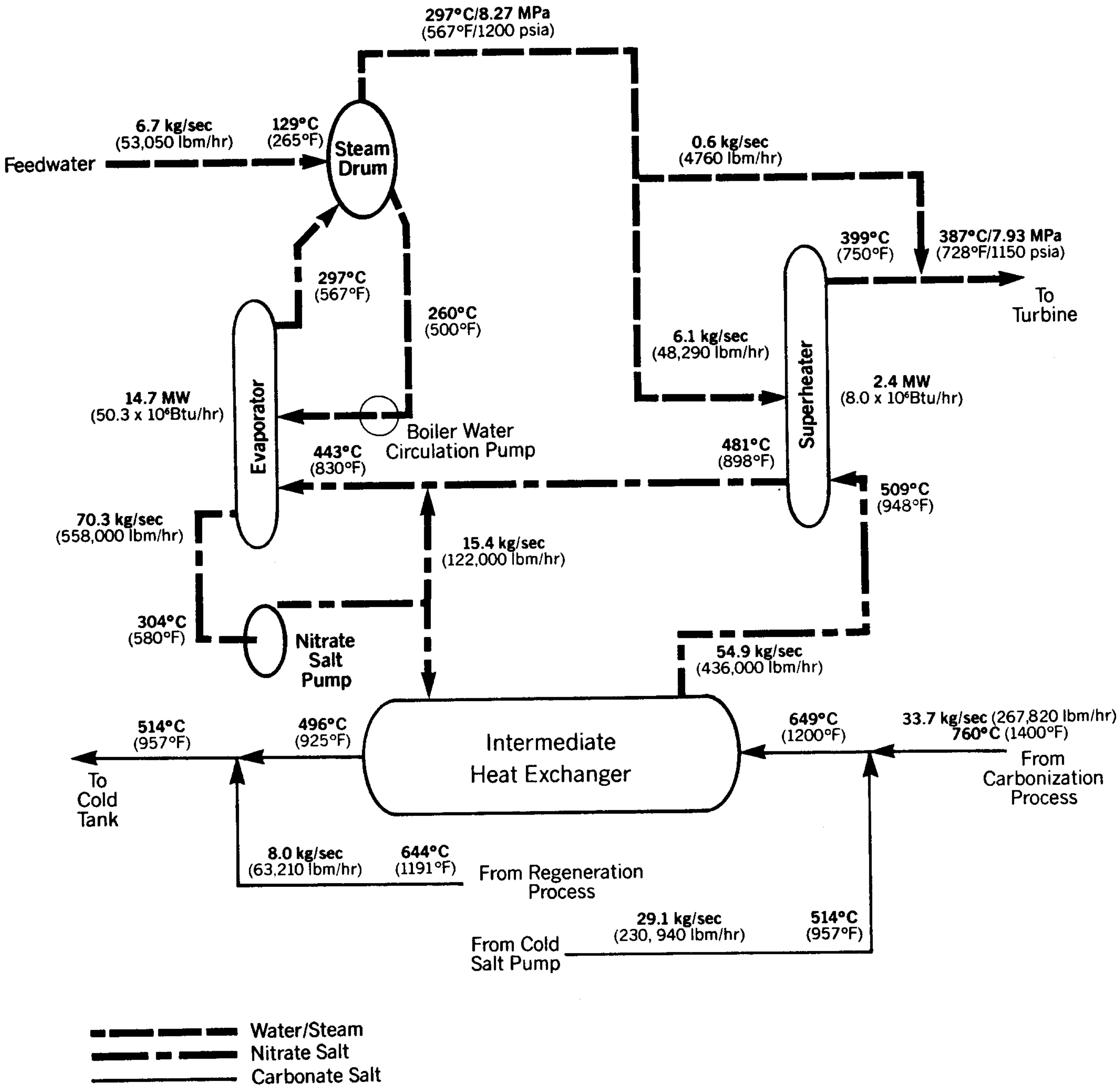

Figure 2-18

The major components of the solar heat transport subsystem are discussed in the following sections with the exception of the components supplied for cogeneration of electric power which are discussed in Section 2.5.2.

2.3.2 Receiver

2.3.2.1 Solar Receiver Requirements

A set of basic requirements for the solar receiver has been established. The specific requirements are of a first level variety, i.e. basic thermal-hydraulic and structural requirements on which a conceptual design can be based. These basic requirements are outlined in Table 2-32.

Table 2-32

Solar Receiver Requirements

Design Point	Solar noon, Day 355
Thermal Rating	41.8 MW_t (142.6 x 10^6 Btu/hr) absorbed at design point
Location	Barstow, California
Insolation Rating	950 W/m^2
Heat Transfer Fluid	Molten carbonate salt; 32.2% Li_2CO_3, 33.3% Na_2CO_3, 34.5% K_2CO_3 by weight
Molten Salt Temperature	514°C (957°F) inlet; 954°C (1750°F) outlet
Configuration	C - cavity, north facing
Type	Forced circulation, once through, two control zones
Operating Life	20 years
Steady-state operating load range	30-100%

2.3.2.2 Receiver Description

The receiver system configuration for the Solar Fuels and Chemicals Design Study is a single, C-shaped cavity receiver with a north-facing aperture (Figure 2-19). The receiver is located on top of a 90 m (295 ft) tall structural steel tower.

The heat transfer fluid is molten carbonate salt (32.2% Li_2CO_3, 33.3% Na_2CO_3, 34.5% K_2CO_3 by weight), which is pumped from the cold salt storage tank at 514°C (957°F) by the cold salt booster pump to the receiver. It is heated to 954°C (1750°F) with the solar energy reflected from the heliostats onto the receiver. A simplified schematic of the receiver system is presented on Figure 2-20. The heliostat field is designed to supply sufficient power with 950 W/m^2 insolation at solar noon on day 355 (designated as the design point) to achieve 41.8 MW (142.6×10^6 Btu/hr) of absorbed thermal power. The hot salt flows to the hot salt storage tank. A control valve at the bottom of the downcomer is used to control the flowrate in the downcomer and as an energy dissipation device. This hot salt storage is then used for energy input to the chemical process system furnaces and to the steam generator subsystem. From the steam generator, the salt returns to the cold storage tank at 514°C (957°F).

The overall dimensions of the receiver structure are 23.8 m (78 ft) tall, 22.9 m (75 ft) wide east to west and 15.2 m (50 ft) wide north to south.

The major components of the solar receiver are:

1) Heat absorption panels;
2) Cavity structure;
3) Aperture door and mechanism;
4) Hot and cold surge tanks;
5) Piping and valves;
6) Ancillary equipment which includes trace heating, insulation, instrumentation, air supply system, and overnight recirculation system.

The following sections discuss these major components.

Solar Receiver Configuration

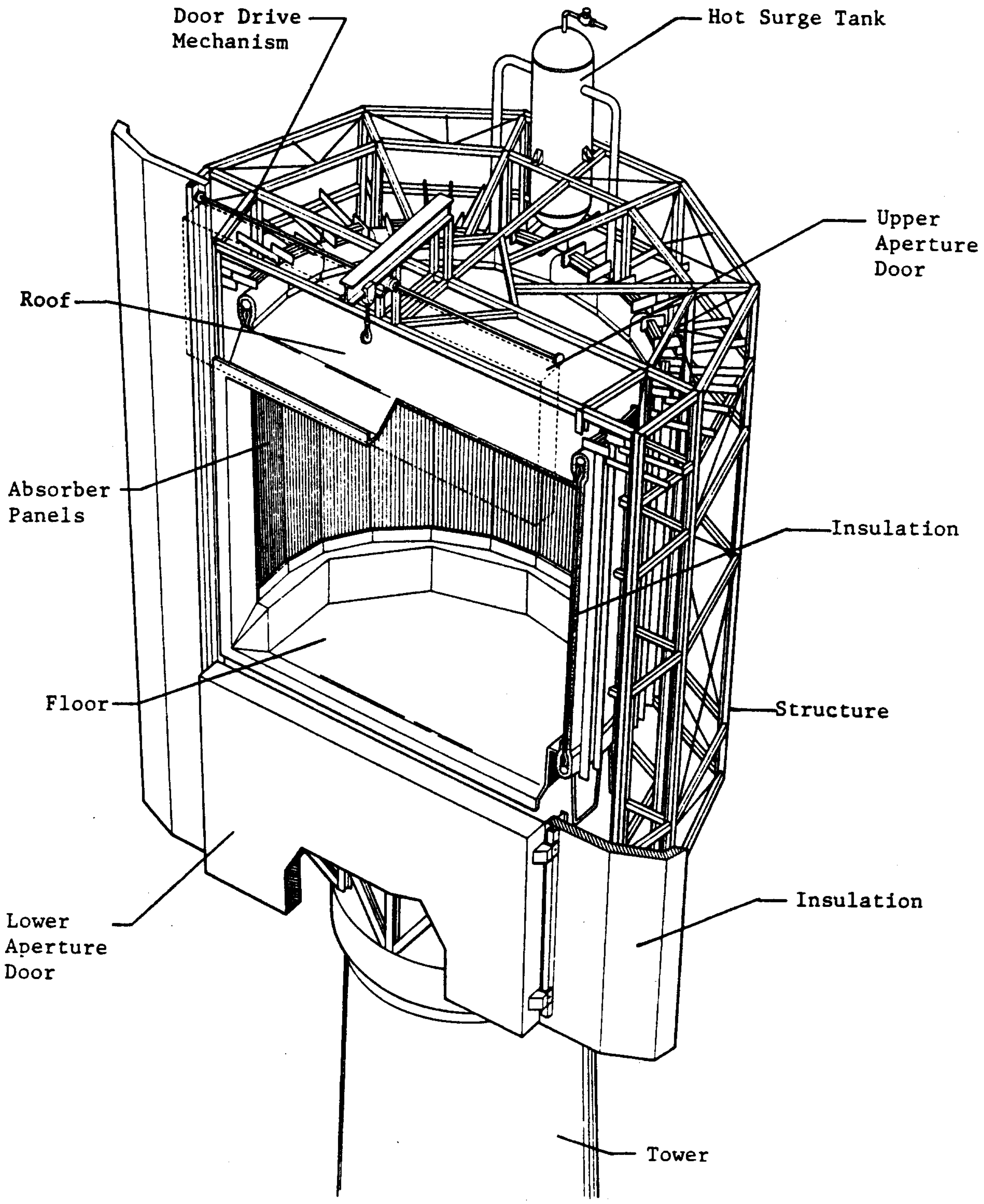

Figure 2-19

Simplified Receiver Flow Schematic

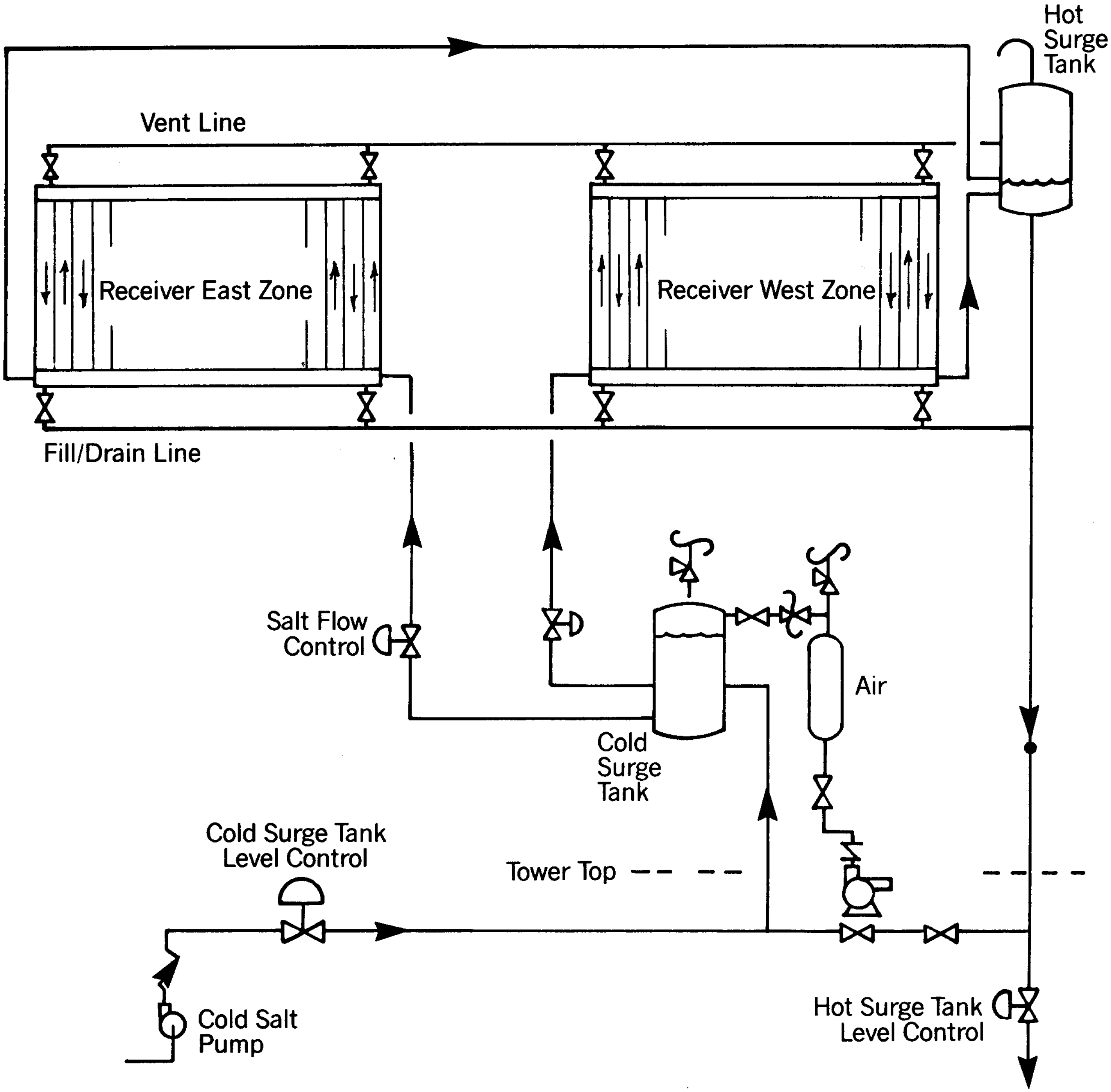

Figure 2-20

2.3.2.3 Heat Absorption Panels

Panel Design

The heat absorption panels of the solar receiver are designed to meet the receiver requirements as outlined in Section 2.3.2.1. In developing the conceptual design for the Solar Fuels and Chemicals receiver heat absorption surface, design experience developed on previous solar contracts was used to generate a reasonable design while bypassing the more detailed design and analysis efforts required to support an advanced conceptual design or a fabrication contract.

The absorbing surfaces are divided into 28 double panels consisting of 30 tubes per double panel. A double panel has an upflow panel and a downflow panel, each with 15 tangent tubes. The double panel has one header at the top with 30 connecting tubes and two headers at the bottom with 15 connecting tubes each. A typical double panel is shown on Figure 2-30. This double panel eliminates a connecting pipe and its associated pressure drop at the upper header. The panels lie symmetrically on the inside of the C-shaped cavity creating an east and a west section, each consisting of 14 double panels. The tubes are 29 mm (1.125 in.) O.D. x 23 mm (0.875 in.) I.D. and are coextruded using Inconel 617 and Inconel 600. The outer layer of each tube is 1.6 mm (0.062 in.) thick Inconel 617 for strength; the inner layer of each tube is 1.6 mm (0.062 in.) thick Inconel 600 for corrosion resistance to the carbonate salt. The tubes are coated with black Pyromark paint. The active heated length of each tube is 9.85 m (32.33 ft.).

The double panels are flat in the heat absorption areas with the tubes bent into the inlet and outlet headers to provide flexibility for thermal expansion. The panels are hung from the top and allowed to expand downward when heated. Supports are welded to the back of the panels to provide lateral restraint. The supports are configured to permit thermal growth of the panels.

Salt flow through the receiver panels comes from the cold surge tank and is divided into the two control zones (east and west). In each of these zones, the salt goes through a control valve, then through the 14 absorber double panels to the hot surge tank where it combines with the hot salt exiting from the opposite control zone. The hot salt then flows down the downcomer to the hot storage tank. The receiver salt flow path is shown on Figure 2-20. The absorber panels are backed with insulation to minimize heat loss through the receiver structure.

The goal of designing the receiver heat absorption surface described above was to define a reasonable receiver panel design and the number of panels required which would result in a minimum cost receiver capable of meeting the performance requirements. For the purpose of this conceptual design study, detailed cost optimization studies were not performed; rather, engineering experience from previous receiver design efforts was applied to develop a reasonable heat absorption surface configuration which met the performance requirements. The requirement imposed on the panels was that they be capable of absorbing the required power with the specified inlet and outlet temperatures, without exceeding tube stress limits based on temperature and pressure effects.

The receiver has an absorbed power rating of 41.8 MW_t (142.6 x 10^6 Btu/hr). Inlet and outlet salt temperatures of 514°C (957°F) and 954°C (1750°F) respectively, result in a total full load salt flow to the receiver of 49.8 kg/sec (395,210 lbm/hr), half of which flows through each receiver zone. The receiver is designed to operate between these specified full load conditions and a minimum load of 30%. The design operating life of the receiver is 20 years.

Using this information, a parametric evaluation was performed using the SRPAN2M computer program to estimate the required panel surface area and resulting pressure drop as a function of tube size, panel width, and tube wall thickness. The panels were modeled as a single equivalent tube. To estimate the surface area required by the receiver for a given power level and panel configuration, SRPAN2M defined allowable flux limits as a function of salt temperature. These were then integrated to establish the absolute minimum, or ideal, surface required to transfer the given energy, without exceeding the flux limits. A receiver surface efficiency was then applied which ratios the ideal surface to the actual surface, allowing for flux distribution and surface margin in the design. A surface efficiency of 0.45 was assumed for this study.

Preliminary evaluations led to the choice of tube outside diameters for the parametric study ranging from 19.1 mm (0.750 in.) to 28.6 mm (1.125 in.). As discussed in Appendix A, the receiver tubes were to be coextruded with an outer layer of Inconel 617 for strength and an inner layer of Inconel 600 for corrosion resistance. Total tube wall thickness was established based on two criteria:

1) Required thickness of the Inconel 600 for corrosion resistance over the life of the receiver.
2) Required thickness of the Inconel 617 to meet the receiver temperature/pressure design conditions.

Based on the evaluation of existing corrosion data for Inconel 600 in contact with carbonate salt, a thickess of 1.6 mm (0.062 in.) for the inner layer of Inconel 600 was established. For a 20 year receiver life this is equivalent to an average corrosion allowance of 0.076 mm/year (0.003 in./year) which is about twice the minimum extrapolated corrosion rate cited in Appendix A. As noted in the Development Plan discussion in Section 4.2, much work needs to be done to develop better data and to explore other materials with regard to the corrosive effects of the carbonate salt. However, from the design standpoint of the heat absorption panels, considering pressure drop, tube wall temperature gradient, and tube stress, a corrosion resisting liner thickness of 1.6 mm (0.062 in.) is on the order of the greatest thickness which is practical. All tube sizes considered in the parametric evaluation of the receiver absorption panels assumed an Inconel 600 thickness of 1.6 mm (0.062 in.) on the tube I.D.

Selecting a thickness for the Inconel 617 outer tube wall layer involved consideration of several competing factors. Thicker tubes permit higher design temperature/pressure ratings for the tubes. Thinner tubes result in lower tube wall temperature gradients (for a given heat flux) and therefore lower tube stresses. Minimizing tube wall thickness becomes limited by welding considerations where the tubing must be welded to the panel headers. Considering these factors along with an expected maximum operating pressure at the receiver inlet on the order of 1.38 MPa (200 psi), as discussed below, and a range of operating tube metal temperatures of about 590°C - 930°C (1100°F - 1800°F) an Inconel 617 wall thickness of 1.6 mm (0.062 in.) for the range of tube outside diameters under consideration was a reasonable choice. The parametric evaluation of the heat absorption surface requirements using computer program SRPAN2M became a function of tube size and panel width, with the tube wall thickness fixed at 3.2 mm (0.125 in.) for all tube diameters.

The parametric study of the receiver panel design was accomplished using SRPAN2M by varying the number of tubes in each panel (panel width) for each tube size evaluated. The number of tubes in each panel is directly proportional to the panel width. The following tube sizes were evaluated:

Outside Diameter		Inside Diameter	
mm	in	mm	in
19.1	0.750	12.7	0.500
22.2	0.875	15.8	0.625
25.4	1.000	19.0	0.750
28.6	1.125	22.2	0.875

SRPAN2M established the allowable absorbed heat fluxes and the surface area required to assure that neither the allowable tube stresses nor the maximum tube metal temperature was exceeded. The major considerations in evaluating the acceptability of the absorption surface designs generated by SRPAN2M for the various combinations of tube size and number of tubes per pass were receiver pressure drop, maintenance of turbulent flow over the 30% - 100% operating range of the receiver, and total absorption surface area of the receiver.

Panel width must be limited to a reasonable extent. Panels with large pass widths can have large flux differences across them, leading to thermal expansion problems. Such wide passes defeat the objective of heating the entire panel at or near its maximum capability because of the flux gradient across the panel. A flux gradient effect is not included in the 0.45 surface efficiency value used in this study. In addition, an estimation of relative cost for the various absorption surface arrangements must be considered.

Turbulent flow over the 30% - 100% load range is required to maintain tube wall temperature gradients at acceptable values for a given heat flux. Should laminar flow conditions develop, the resulting lower molten salt heat transfer coefficient would increase the tube wall temperatures and resulting stresses to potentially unacceptable levels. The critical condition which must be evaluated for turbulent flow is the 30% minimum load salt flow at the inlet to the receiver where the high salt viscosity results in the lowest Reynolds number for a given salt flow rate. The need to maintain sufficient Reynolds number tends to drive the panel design towards higher velocities, or a lower number of tubes per pass.

Several competing factors influence the choice of receiver pressure drop. The need to maintain turbulent flow at minimum operating load, with the attendant full load salt velocities resulting from this requirement, tends to increase receiver pressure drop. Higher receiver pressure drop also tends to reduce receiver surface area required because of the higher salt heat transfer coefficients, lower tube wall temperatures differences, and resulting higher allowable heat fluxes. On the other hand, minimizing receiver pressure drop reduces plant pump power requirements. Another consideration in establishing pressure drop is downflow stability in the receiver. Since the density of the carbonate salt working fluid decreases with temperature, there is a decreasing salt density from the inlet to outlet of the receiver. The density gradient gives rise to buoyancy effects which can act counter to frictional effects. The results of these opposing effects can cause a negative pressure drop across a portion of the receiver at low flow conditions; this situation may give rise to flow instabilities. Thus, it is necessary to assure sufficient frictional pressure drop at the minimum 30% operating load. In considering these various factors, a full load pressure drop on the order of 1.38 MPa (200 psi) was established as a design target for the receiver heat absorption panels, headers, and panel interconnecting piping.

The results of the parametric evaluation of the receiver panel design are summarized on Figure 2-21. On this figure, the receiver pressure drop, 30% load Reynolds number, and the required surface area are plotted as a function of number of tubes for each of the four tube sizes considered. The two smaller tube sizes were eliminated from consideration because the number of tubes required to maintain sufficient Reynolds number at minimum load results in full load pressure drops well in excess of the target value of 1.38 MPa (200 psi). Both the 25.4 mm (1.000 in.) and 28.6 mm (1.125 in.) diameter tubes had a range of number of tubes per pass for which acceptable Reynolds number and pressure drop values existed. Further consideration of these two tube sizes led to the choice of 15 - 28.6 mm (1.125 in.) diameter tubes per pass on the basis of lower required surface area [236m^2 (2545 ft^2] than for the 25.4 mm (1.000 in.) diameter tubes and a receiver pressure drop of 1.44 MPa (209 psi) at full load. (This total pressure drop includes the panel pressure drop from Figure 2-21 and an allowance for pressure drop in the headers and interconnecting piping.) With regard to fabrication costs, the two tube sizes were judged to be quite similar. The allowable absorbed heat flux for the 15 tube panel design as a function of salt temperature and as a function of heat absorption surface area is plotted on Figures 2-22 and 2-23. A typical two pass tube wall panel is shown on Figure 2-30.

A final check was performed on the acceptability of 1.6 mm (0.062 in.) thickness of the Inconel 617 for pressure thickness. The allowable pressure as a function of maximum tube metal temperature for a 28.6 mm (1.125 in.) O.D., 1.6 mm (0.062 in.) wall Inconel 617 tube is plotted on Figure 2-24. Also plotted on this figure is a representative curve of required design pressure for the receiver tubes as a function of maximum tube metal temperature. Because the code allowable pressure is, at all temperatures, in excess of the required receiver design pressure, the 1.6 mm (0.062 in.) tube wall is suitable for the receiver design. Because the minimum value on the code allowable pressure curve is less than the maximum value on the receiver design pressure curve, the receiver must be partitioned into three sections for the purpose of establishing design temperature/pressure for code sizing as shown in Figure 2-25.

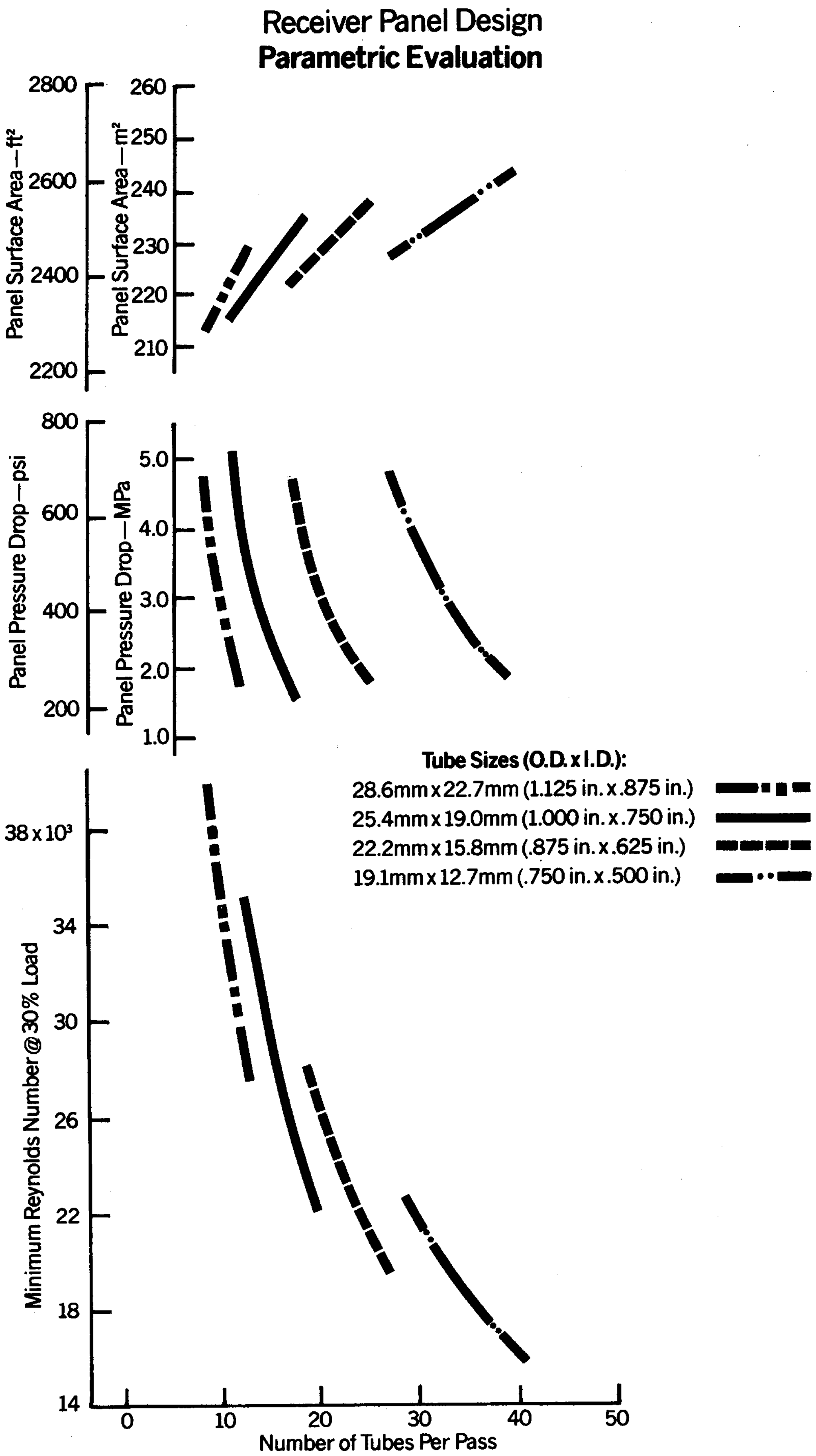

Receiver Panel Design
Parametric Evaluation

Figure 2-21

Peak Allowable Absorbed Flux
vs.
Salt Temperature

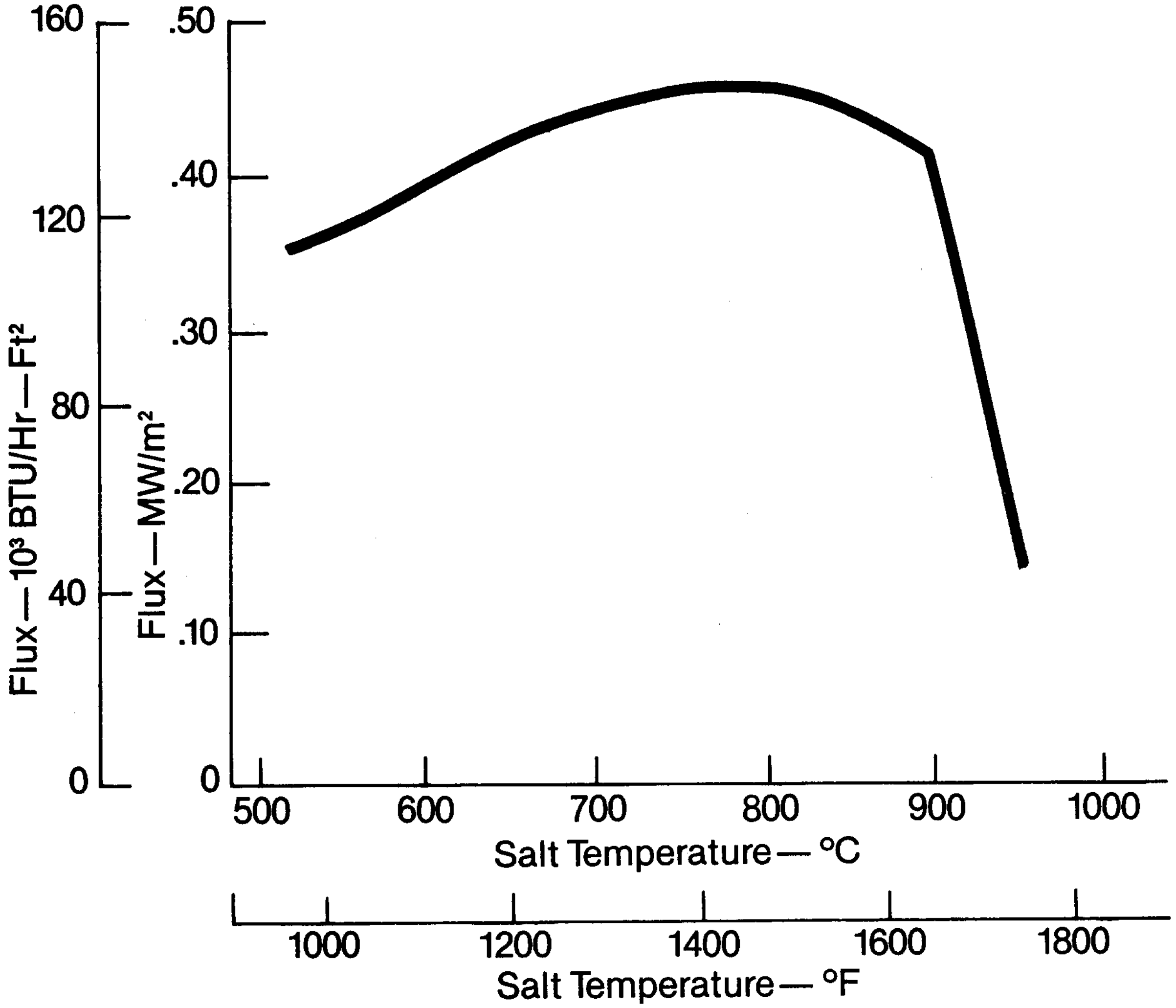

Figure 2-22

Peak Allowable Absorbed Flux
vs.
Receiver Surface

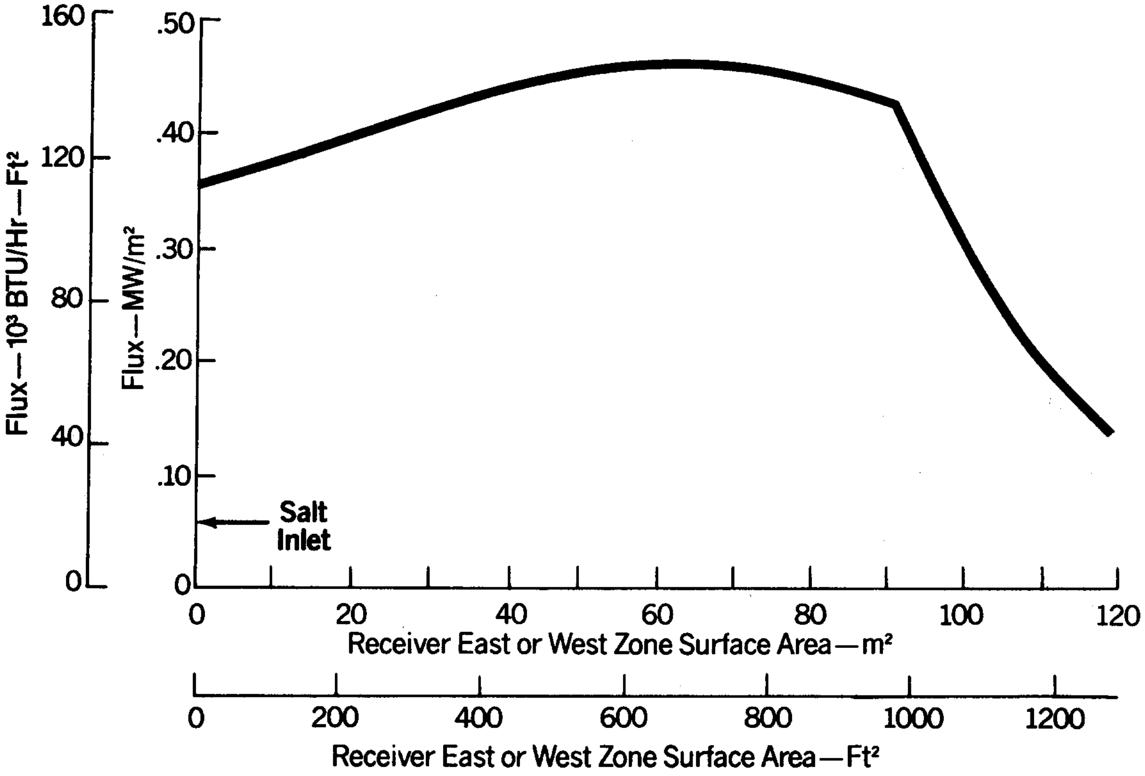

Figure 2-23

Allowable Receiver Design Pressure
vs.
Tube Temperature

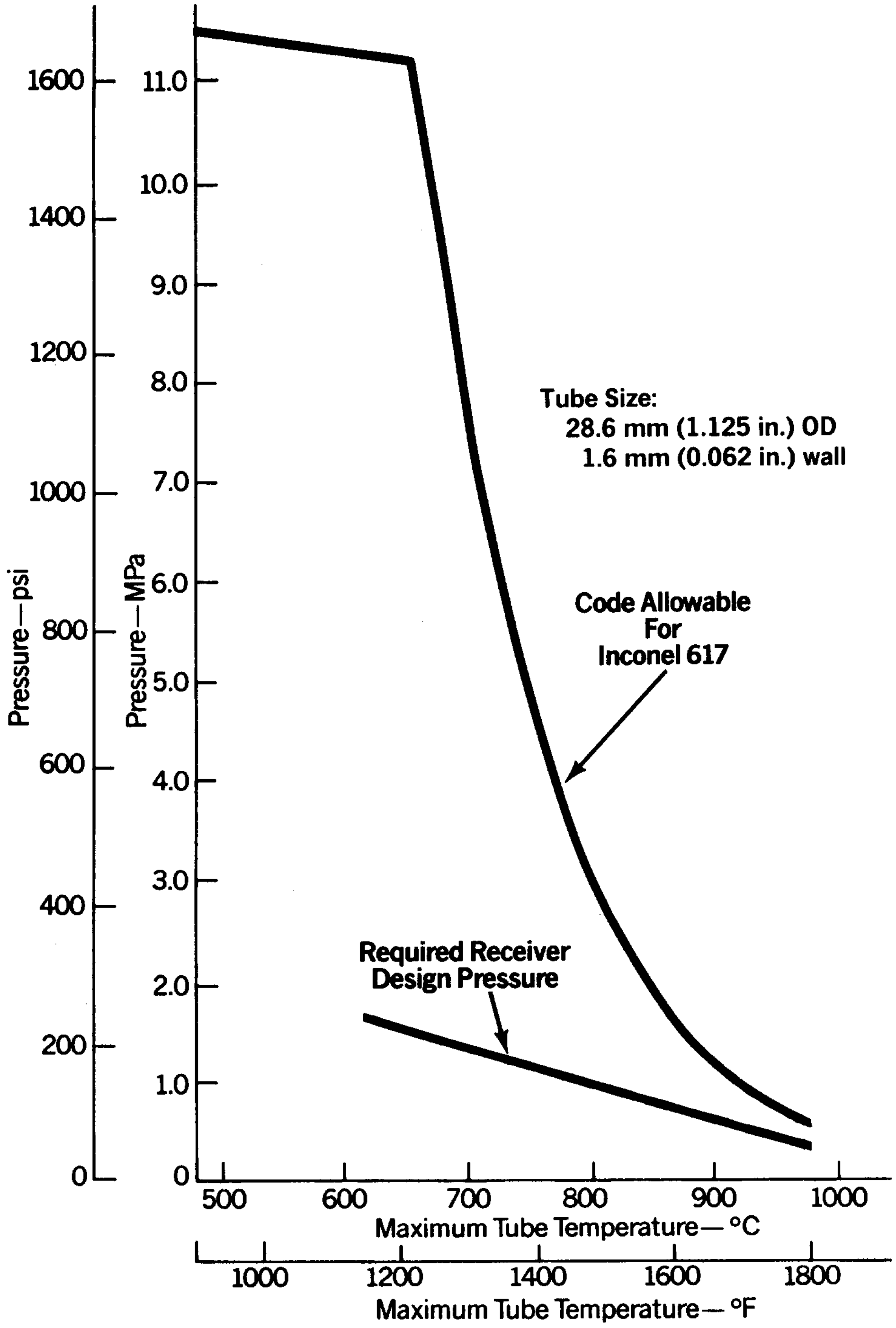

Figure 2-24

Allowable Receiver Design Pressure/Temperature Regions

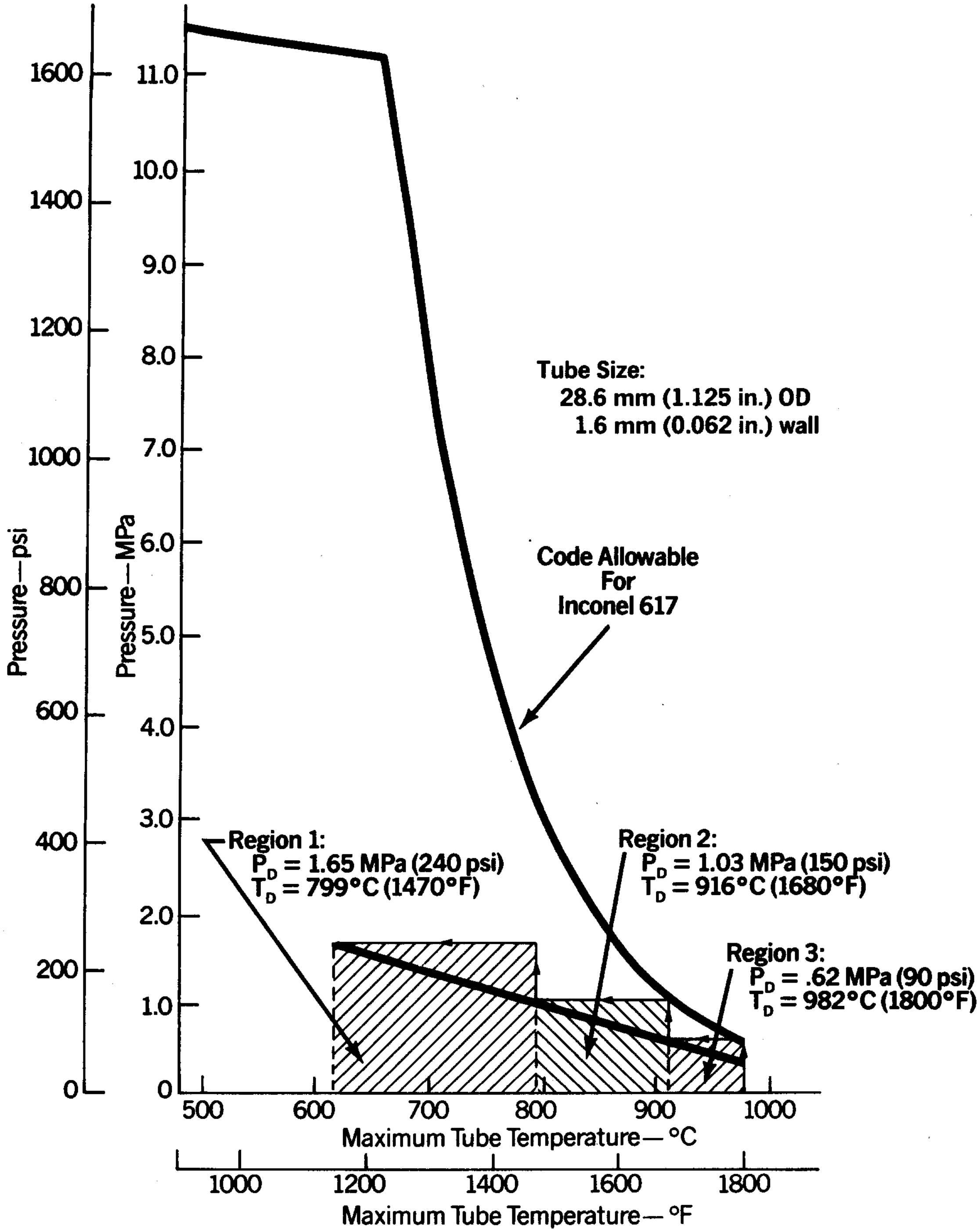

Figure 2-25

Panel Allowable Flux Limits

The allowable flux limits of the receiver panel tubes are based on the mechanical and corrosion properties of the selected materials. To assure that a receiver tube design is capable of high reliability and long life, two major limits must be established. First, a maximum allowable stress limit must be set to provide structural integrity of the panel for the applied loads and panel life. The establishment of such a limit can be a very difficult task because of the complex, inelastic conditions imposed on the material by the thermal loading. Simplified elastic design rules may be employed to establish such a stress limit, and the heat absorption limits may be set to remain below this limit. As was stated in Appendix A, this was further complicated by the lack of a material property data base of the Inconel 617 material selected.

The second of the two major design limits is based on corrosion properties of the material in contact with the molten salt. Again as was stated in Appendix A, information on the corrosion resistance of Inconel 617 in the molten carbonate salt environment was not available. Therefore, the duplex tube concept was proposed to satisfy both criteria. With this approach, corrosion for this application was not limiting.

Allowable Stress - In order that the solar receiver be designed to assure the specified panel lifetime, tube stresses and strains covered by cyclic thermal loads must be limited according to some failure theory. Table 2-33 presents the limits obtained for Inconel 617 material for the receiver. The following paragraphs discuss the failure theory that was applied and how these limits were established.

Failure Theory - The lifetime of the material is limited by two mechanisms-- creep and fatigue. Theory that is employed to combine the damage caused by creep and fatigue is that of "linear damage" as presented in Code Case N-47 (Reference 36). Creep damage is assessed based on the effective stress state, the material temperature and the time interval at the stress and temperature; fatigue damage is based on the range of effective strain experienced in a service cycle and the number of cycles experienced.

Table 2-33
Allowable Stress Range for Inconel 617

ALLOWABLE TEMPERATURE STRESS RANGE (DEGF) (KSI)	1.5*S SUB M (KSI)	RELAXED STRESS (KSI)	CREEP DAMAGE	FATIGUE DAMAGE	EQUIVALENT FATIGUE STRAIN RANGE	EFFECTIVE STRESS AMPLITUDE (KSI)	MAX COLD TENSILE STRESS (KSI)	ALLOWABLE STRESS RANGE (KSI)
800.0 45.991	32.250	30.212	0.138	0.862	0.001719	22.996	15.780	45.992
850.0 42.979	31.950	27.095	0.352	0.648	0.001625	21.490	15.885	42.980
900.0 38.511	31.650	23.771	0.648	0.352	0.001473	19.256	14.741	38.512
950.0 38.628	31.500	20.607	0.591	0.409	0.001495	19.314	18.020	38.627
1000.0 37.437	31.350	17.679	0.630	0.370	0.001466	18.718	19.758	34.437
1050.0 37.621	31.200	14.965	0.551	0.449	0.001491	18.810	22.656	37.621
1100.0 35.484	31.050	12.217	0.676	0.324	0.001423	17.742	23.268	35.485
1150.0 31.933	31.050	9.212	0.845	0.155	0.001297	15.967	22.722	31.934
1200.0 32.295	25.350	6.650	0.802	0.198	0.001328	16.147	25.645	32.295
1250.0 37.184	19.500	4.756	0.115	0.885	0.001568	18.824	32.892	37.006
1300.0 36.413	15.000	3.384	0.063	0.937	0.001568	18.589	33.793	35.634
1350.0 35.378	11.550	2.395	0.087	0.913	0.001543	18.060	33.724	34.645
1400.0 34.097	9.000	1.689	0.216	0.784	0.001496	17.275	32.861	33.939
1450.0 33.422	6.900	1.188	0.187	0.813	0.001482	16.895	32.602	33.248
1500.0 31.858	5.400	0.833	0.372	0.628	0.001417	15.929	31.025	31.858
1550.0 31.769	4.200	0.583	0.200	0.800	0.001432	15.885	31.186	31.769
1600.0 30.938	3.300	0.406	0.151	0.849	0.001414	15.469	30.531	30.937
1650.0 30.330	3.000	0.283	0.092	0.908	0.001406	15.165	30.047	30.330
1700.0 29.606	2.100	0.196	0.058	0.942	0.001392	14.803	29.410	29.606
1750.0 27.987	1.650	0.136	0.036	0.964	0.001335	13.993	27.851	27.987
1800.0 26.319	1.350	0.093	0.043	0.957	0.001274	13.159	26.225	26.318

Failure of the material is predicted when:

$$\sum \frac{n}{N_d} + \int \frac{t}{T_d} = 1$$

where:

n = Number of cycles of a given strain range experienced,

N_d = Allowable cycles, per N-47 material specifications, for this range,

t = Time spent at a given stress and temperature, and

T_d = Allowable time, per N-47 material specifications, at this condition.

To predict the allowable loading that would result in failure , the load conditions are first defined. The load intensity may then be found, which yields failure in the required cycles of fatigue and duration of creep.

Load Cycle - The loading of the tube is caused by heating the front side of the tube with energy from the collector field. This heating results in a compressive stress on the front side of the tube, balanced by tensile stresses on the back. Because the tube supports tend to restrain the panel in its initial plane, allowing only for overall axial growth, the tube may be considered to be in a plane strain condition.

The stresses and strains that result from this loading may be predicted by various means. Babcock & Wilcox Company has used finite element type analysis and finite differences techniques via computer codes as well as classical applied mechanics hand calculations. Numerous tube geometries have been investigated and, in general, the temperature and stress patterns determined by one-dimensional conduction and simplified thermal stress theory ($E \propto \Delta T$) for thin tubes are found to be in good agreement with the more sophisticated methods. This method employs a procedure simple enough to permit the use of a small computer program.

Primary load stresses caused by internal pressure, deadweight, wind loading, and seismic conditions may then be superimposed on the thermal stresses. These loads were omitted from preliminary design calculations for the following reasons:

1) Pressure and deadweight are relatively small and tend to reduce the effective stress and strain at the tube crown where the worst condition occurs;
2) Wind loads are not well defined and operation with high winds is not anticipated;
3) Seismic loads occur infrequently.

Linear analysis may be employed if failure is predicted for a stress and associated strain range within the limits of elastic behavior.

The nature of the thermal loading of the tube is cyclic because of the diurnal cycle of plant operation. To model this cycle, all operating hours will be considered to occur at design point conditions, and overnight operation will occur with recirculation of salt at an equilibrium temperature of 510°C (950°F). Cycles for dry startup and fill of the receiver will be counted as equivalent to a typical diurnal cycle, and the procedure for dry startup will be set to assure that this is valid. Cloud transients are also assumed to result in an equivalent stress range.

For design purposes, the heat flux on the tube will be assumed to have a cosine distribution (a result of the tube shape). Under this heating, peak temperatures and compressive stresses occur at the tube crown and are localized. Tube crown temperatures are well into the material creep range, and so the compressive stress will tend to cause creep. During overnight standby, a tensile stress state will occur at the tube crown, but because of the overnight recirculation temperature being 510°C (950°F) creep will be minimal. This minimal creep has been neglected in this study but would be accounted for in a more detailed analysis. The load cycle of the tube is thus a constant strain range imposed by thermal strains, with a mean stress gradually becoming tensile as creep strains are accumulated.

Assessment of Fatigue Damage - Fatigue damage occurs because of the range of equivalent strain, given by:

$$\Delta\varepsilon = \frac{\sqrt{2}}{3}\left[\Delta(\varepsilon_1-\varepsilon_2)^2 + \Delta(\varepsilon_2-\varepsilon_3)^2 + \Delta(\varepsilon_3-\varepsilon_1)^2\right]^{1/2}$$

The equivalent strain range is found for the biaxial state of stress at the tube crown from the stress results obtained using Applied Mechanics Techniques and Hookes Law for linear elastic behavior. This strain range will be valid as an elastic cycle behavior superimposed upon the eventual plastic set achieved as a result of shakedown. The range will be constant, regardless of the tube set, as the alternating strain is simply a result of the alternating temperature distribution, and as along as the effective stress range is below the limit for elastic shakedown, the cycles are elastic.

Creep Damage Evaluation - Assuming that yielding takes place on the first few cycles, an initial plastic prestrain is developed along with a peak compressive stress equal to the hardened compressive yield point. Compressive creep will start from this condition. As creep proceeds, the compressive stresses will tend to relax. Because the tensile part of the cycle (i.e. unloading) occurs at temperatures below the creep temperature range, creep will cease during this part of the cycle and is assumed to take up where it left off when heated again. As the compressive stress decreases due to creep, the rate of creep damage accumulation (t_i/T_d) will drop off as well. This effect is important because creep could be interpreted as being far more significant in the eventual damage accumulation if this relaxation is not accounted for. Using a creep equation of Booker and starting at a stress equal to 1.5 Sm (Sm = the design strength) the peak compressive stress may be predicted as a function of time. The corresponding values for T_d damage may be integrated. A computer program has been written to perform these calculations.

The creep equation used assumes that a constant strain is imposed on the material while stress relaxation takes place. In the tube, the average cross-section strain will have a value that depends on the crown compressive stress and the back-side tensile stress. As the crown compressive stress decreases, the tensile stresses on the back side will cause additional compressive strain at the crown. The result of this will be longer hold times at any given stress level. To account for this in the damage estimation, the creep damage calculated for a constant strain is multiplied by a factor of 1.5. This factor is reasonable because the maximum potential for creep, given by $(E_{crown} - E_{back})$ is less than 1.5 times the crown strain. A value of 1.5 times the creep damage for constant strain is the damage which would occur for a total creep strain of 1.5 times that of the constant strain case, occurring over 1.5 times the time, at the same creep rate (or stress levels).

<u>Combined Damage</u> - A total of 40,000 full thermal cycles are considered for fatigue. This is equivalent to six cycles per day for the 20 year plant design. A total of 100,000 hours are considered for creep. This is a somewhat conservative estimation of the operating time for the 20 year design life. The question of combined damage is, "What cycle range of effective stress and equivalent strain yields a total damage fraction of 1 in 40,000 cycles and 100,000 hours of operation?" This problem is approached for a range of metal temperatures, by:

1) Calculating creep damage, beginning at 1.5 S_m' accumulated in 100,000 hr, and the associated relaxed stress;

2) Subtracting this damage from 1 to find the allowable fatigue damage;

3) Finding the allowable equivalent strain range that will yield the allowable fatigue damage, and finding the corresponding effective stress range (by the elastic methods);

4) Comparing the resulting stress range with elastic limits.

The limits of elastic behavior are set at 1.5 S_m' evaluated at the temperatures of both the hot (compressive) and cold (tensile) extremes of the cycle. The cycle stress range is compared to the range between the relaxed compressive stresses and 1.5 S_m' at 510°C (950°F) (the assumed cold temperature) to determine whether elastic cycling results in prediction of failure. If the cycle range is greater than the elastic range, the estimation of cycle stress range from the allowable strain range is invalid. Except for a small area in the vicinity of 704°C (1300°F) it was found that the cyclic range was greater than the elastic range. However, the difference in ranges was less that 10% and therefore can be accepted as the limit for elastically calculated effective stress (the higher limits could be justified by a more rigorous inelastic analysis). The last column of Table 2-33 presents these limits.

Allowable Fluxes - Using elastic thermomechanical analysis, the heat flux and salt temperature were calculated that result in the allowable effective stress range as a function of metal temperature. Figure 2-22 presents the heat flux limits as a function of salt temperature.

In the process of establishing the allowable stress range (input to the thermomechanical analysis), several assumptions should be recognized. The first assumption is that the material Inconel 617 goes through a stress relaxation in accordance with the same mathematical creep equations as Incoloy 800H. It was necessary to go this route since detailed creep data is not available for Inconel 617. It is believed that this approach is conservative because if one compares the creep rupture strength data of the two materials, Inconel 617 has a greater rupture strength than Incoloy 800H. Therefore, it would appear that creep relaxation of Inconel 617 would be at a slower rate than 800H. For further detailed effort it is of paramount importance that additional material testing of 617 be performed to obtain this information.

The other assumption made was to assume that the tube is a single wall tube of Inconel 617 material instead of a duplex tube comprised of Inconel 600 and Inconel 617 materials. Since detailed 617 material properties are not available, it was decided that the increased effort to revise the computer program to account for a dual material tube was not efficient, and that the time could be better spent elsewhere . The fact that the tube wall is only 3.2 mm (0.125 in.) thick and that the thickness of each material is 1.6 mm (0.062 in.) leads one to believe that from a structural adequacy standpoint, the results of a single wall material tube are representative for this study.

2.3.2.4 Heat Absorption Surface Arrangement and Cavity Configuration

The design of the heat absorption panels discussed in Section 2.3.2.3 resulted in a required heat transfer surface of 236 m^2 (2545 ft^2). The maximum allowable absorbed flux as a function of both salt temperature and surface area were also developed in Section 2.3.2.3 and are plotted on Figures 2-22 and 2-23. The arrangement of the receiver surface and the cavity configuration must be integrated with the design of the collector field and receiver tower to assure that sufficient incident energy reaches the receiver absorption surface from the collector field to provide the required design point power without exceeding the absorption surface flux limits. In addition, the collector field and tower must be designed to make efficient use of the heliostats in the field.

The allowable incident flux on the receiver heat absorption surface was based on the thermal efficiency of the cavity, which is defined as the ratio of the energy retained by working fluid to the energy entering the aperture. The difference between the energy entering the cavity and that absorbed by the working fluid is the cavity loss, attributable to radiant and reflective losses, convective losses, and conduction losses. Plots of allowable incident flux q''_I, as functions of both salt temperature and receiver surface area (Figures 2-26 and 2-27) were established based on the allowable absorbed flux, q''_A, and the thermal efficiency, e, by

$$q''_I = q''_A/e$$

The thermal efficiency determination was based on an initially assumed cavity arrangement. After the cavity arrangement was finalized as shown on Figures 2-30 and 2-31, the thermal efficiency estimate was reviewed and found to be reasonable for this final configuration.

Estimates presented on the figures of SNL report "The Performance of High-Temperature Central Receiver Systems" (Reference 37) were used to estimate the radiant loss fraction based on the collector field size and the average receiver operating temperatures. Calculations using estimated view factors between the heat absorption surface and the aperture were also made to estimate the radiant loss fraction. The radiant loss fraction was estimated in the range of 0.08 to 0.11.

Figures in the Reference 37 report were also used to estimate the convective loss fraction of the cavity, as was the correlation developed by Kraabel (Reference 38) for the assumed cavity geometry. The convective loss fraction was estimated in the range of 0.08 to 0.11.

The conduction loss fraction through the cavity boundary was assumed to be 0.01.

Based on the values estimated for the three components of the receiver efficiency, the loss fraction for the receiver was assumed to be 0.22, resulting in a receiver efficiency of 0.78.

As discussed in Section 2.4.1.2, various cavity configurations were considered in the DELSOL2 analysis with spatial incident flux maps on the receiver absorption surface developed for each. For example, on Figure 2-28, the peak incident fluxes for the initial receiver configuration are compared to the allowable incident fluxes; this comparison indicates that changes are required to the configuration to reduce the peak incident fluxes. After considering the various configurations outlined in Section 2.4.1.2, the configuration with the receiver panels on a 180° arc at a radius of 7.66 m (25.1 ft) and the radius center 3.3 m (10.8 ft) south of the aperture plane was selected. As can be seen on Figure 2-29 the incident flux exceeds the allowable slightly near the receiver inlet; this was judged acceptable within the accuracy of the analysis performed for this conceptual design. The arrangement of the receiver cavity and heat absorption surface is shown on Figures 2-30 and 2-31.

Peak Allowable Incident Flux
vs.
Salt Temperature

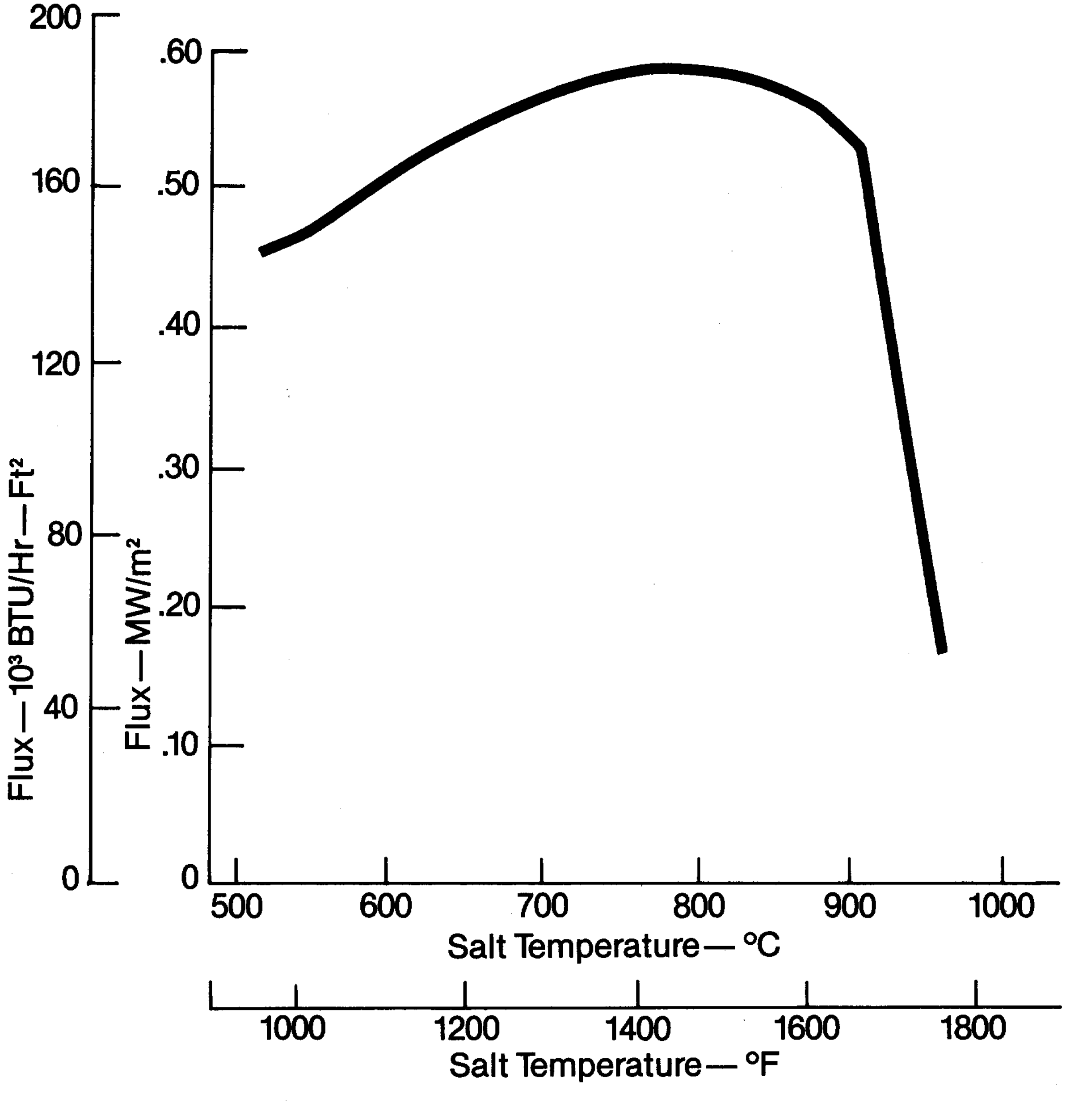

Figure 2-26

Peak Allowable Incident Flux
vs.
Receiver Surface

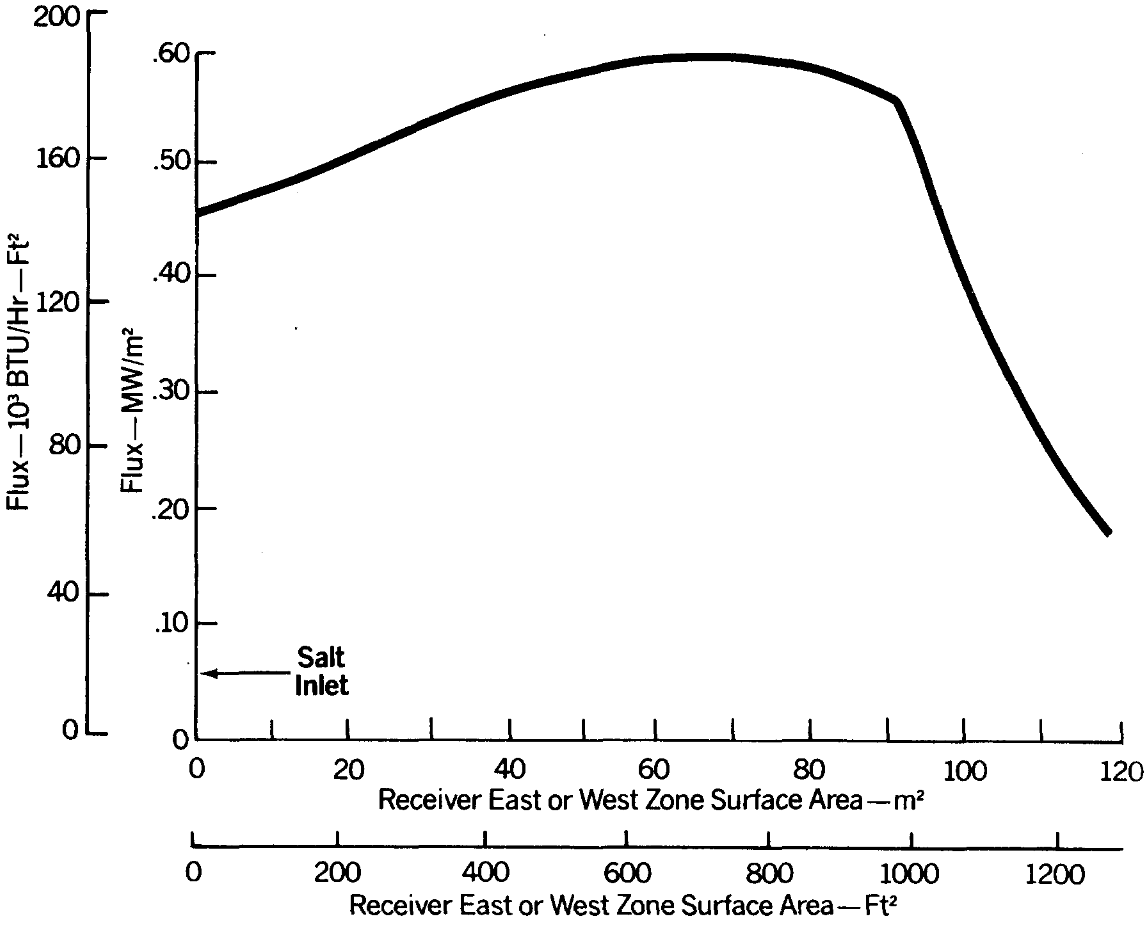

Figure 2-27

Peak Incident Flux
vs.
Receiver Surface

Initial Receiver Configuration

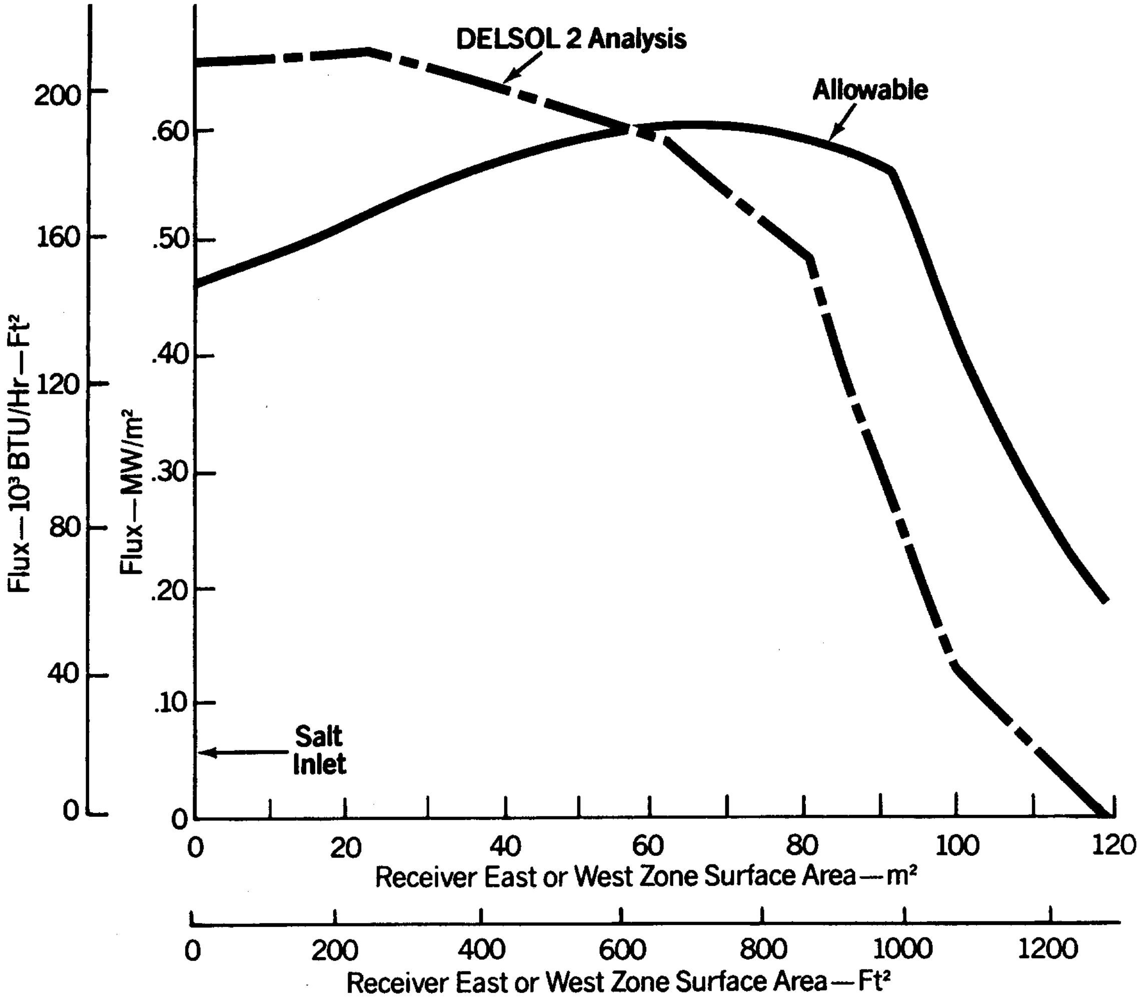

Figure 2-28

Peak Incident Flux
vs.
Receiver Surface

Final Receiver Configuration

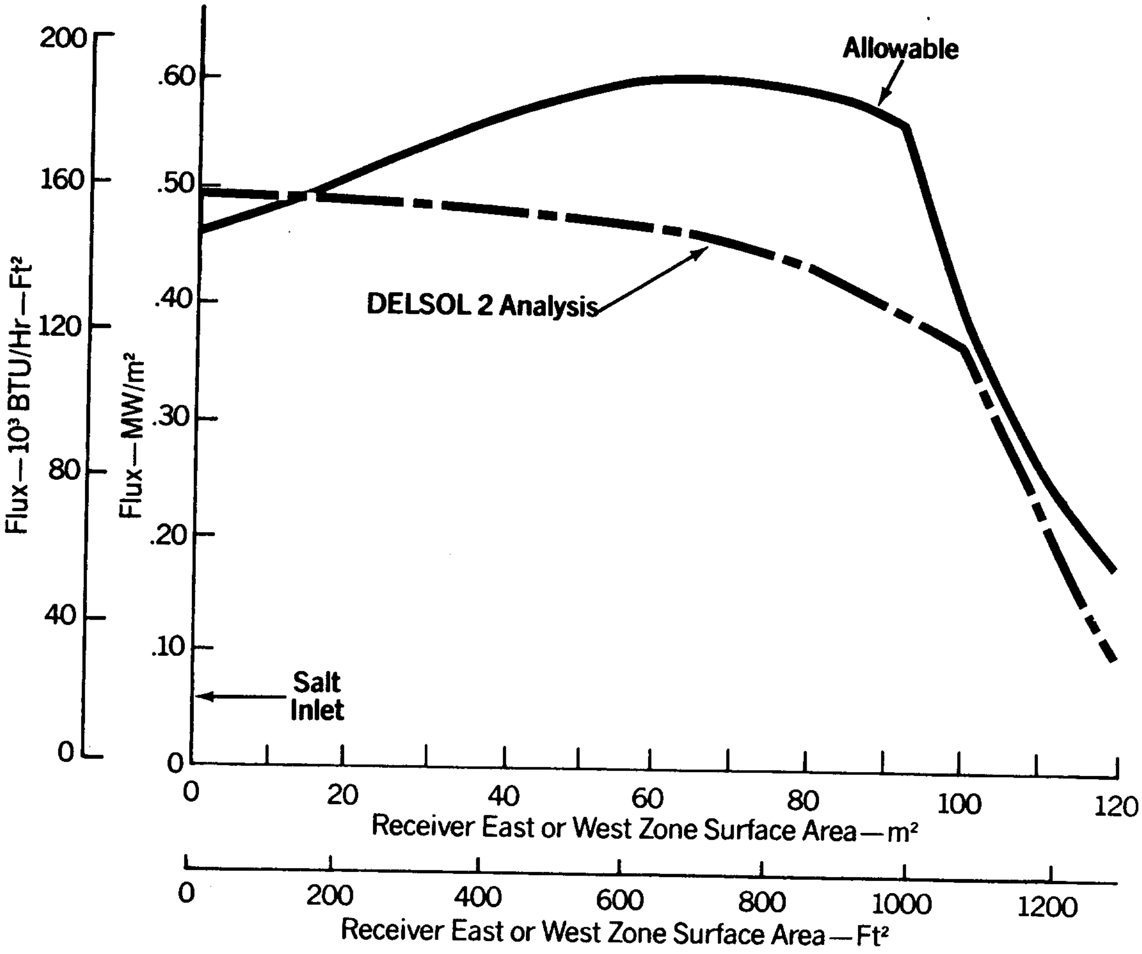

Figure 2-29

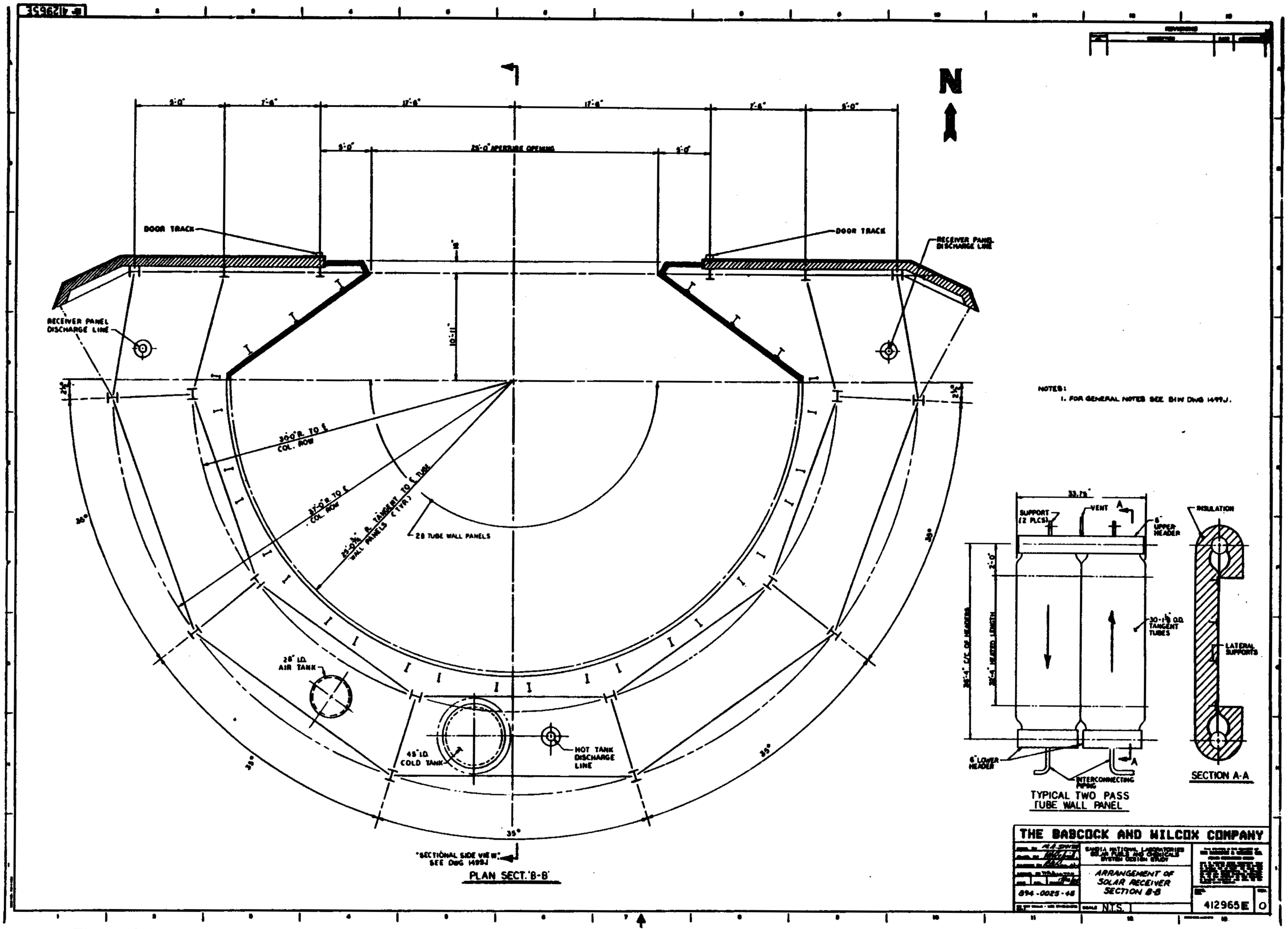
412965E
N
9'-0"
7'-6"
17'-6"
17'-6"
7'-6"
9'-0"
5'-0"
25'-0" APERTURE OPENING
5'-0"
DOOR TRACK
DOOR TRACK
RECEIVER PANEL DISCHARGE LINE
RECEIVER PANEL DISCHARGE LINE
16"
10'-11"
30'-0" R. TO ℄ COL. ROW
37'-0" R. TO ℄ COL. ROW
25'-0⅜" R. TANGENT TO ℄ TUBE WALL PANELS (TYP.)
28 TUBE WALL PANELS
30°
35°
35°
35°
35°
30°
28" I.D. AIR TANK
45' I.D. COLD TANK
HOT TANK DISCHARGE LINE
"SECTIONAL SIDE VIEW" SEE DWG 1499J
PLAN SECT. 'B-B'
NOTES:
1. FOR GENERAL NOTES SEE B&W DWG 1499J.
33.75"
SUPPORT (2 PLCS)
VENT
A
6" UPPER HEADER
2'-0"
36'-4" C/C OF HEADERS
36'-4" HEATED LENGTH
30-1⅛" O.D. TANGENT TUBES
6" LOWER HEADER
INTERCONNECTING PIPING
A
TYPICAL TWO PASS TUBE WALL PANEL
INSULATION
LATERAL SUPPORTS
SECTION A-A
THE BABCOCK AND WILCOX COMPANY
SANDIA NATIONAL LABORATORIES SOLAR FUELS AND CHEMICALS SYSTEM DESIGN STUDY
ARRANGEMENT OF SOLAR RECEIVER SECTION B-B
894-0025-48
N.T.S.
412965E
0

Figure 2-30

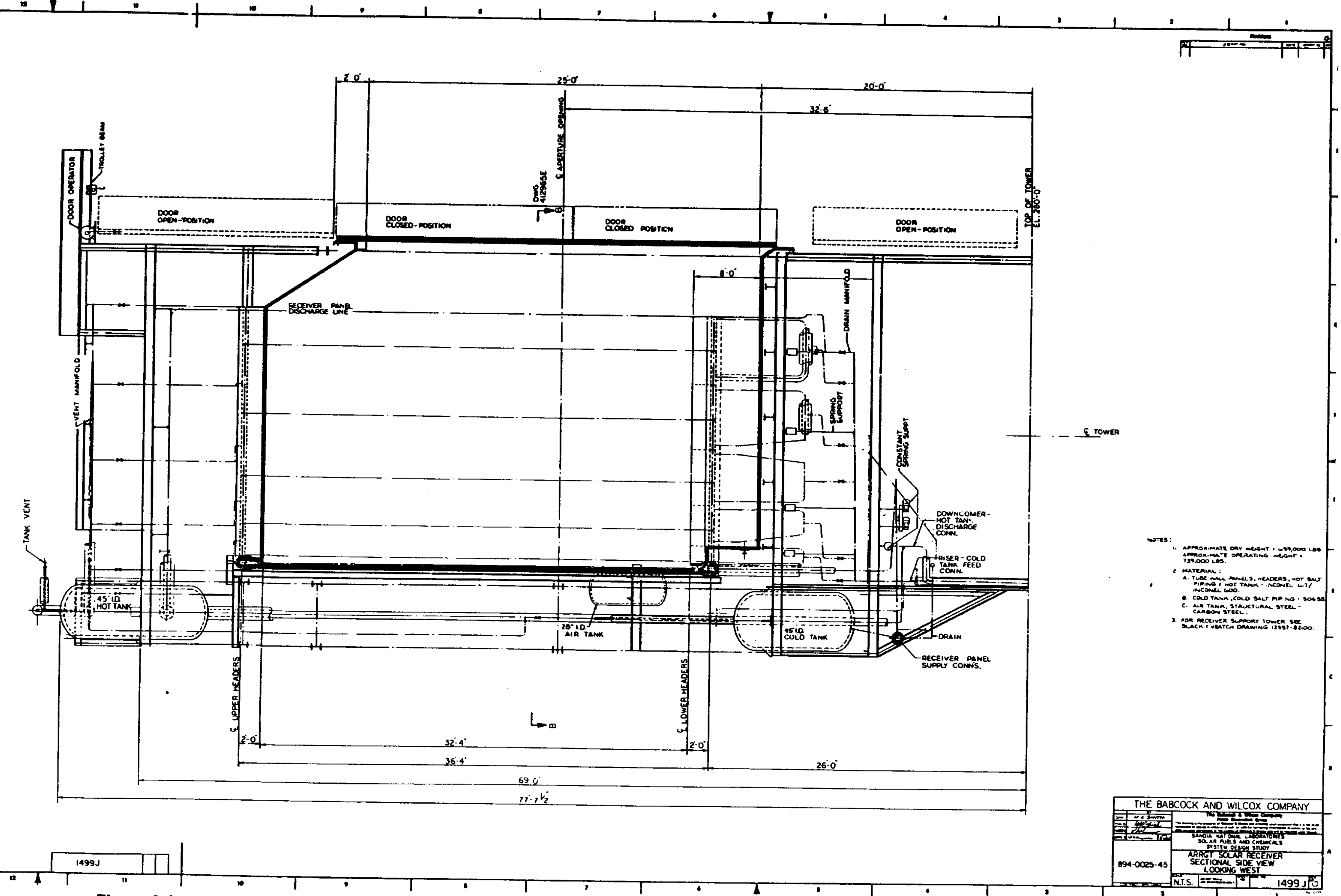

NOTES:

1. APPROXIMATE DRY WEIGHT = 699,000 LBS APPROXIMATE OPERATING WEIGHT = 739,000 LBS.
2. MATERIAL:
   - A. TUBE WALL PANELS, HEADERS, HOT SALT PIPING & HOT TANK - INCONEL 617/ INCONEL 600.
   - B. COLD TANK, COLD SALT PIPING - 304SS
   - C. AIR TANK, STRUCTURAL STEEL - CARBON STEEL.
3. FOR RECEIVER SUPPORT TOWER SEE BLACK & VEATCH DRAWING 12557-82100.

THE BABCOCK AND WILCOX COMPANY

SANDIA NATIONAL LABORATORIES
SOLAR FUELS AND CHEMICALS
SYSTEM DESIGN STUDY

ARRGT SOLAR RECEIVER
SECTIONAL SIDE VIEW
LOOKING WEST

894-0025-45

N.T.S.

1499 J

Figure 2-31

2.3.2.5 Hot and Cold Surge Tanks

The receiver system contains a hot surge tank and a cold surge tank. These equal volume tanks were sized to provide emergency cooling to the receiver absorber surfaces in the event of a loss of electrical power to the collector field which requires emergency defocus of the heliostats. Previous studies have based the cold surge tank salt volume on the requirement that the inventory be sufficient to provide full load salt flow to the receiver for 90 seconds. This time period was established based on analysis of the electrical requirements of the collector field being supplied by back-up diesel power and on the assumption that only a certain portion of the field could be defocused at a time. For the Solar Fuels and Chemicals Design Study receiver, the tanks were sized to provide full load salt flow to the receiver for 120 seconds. The tanks also act to decouple salt flow through the receiver from flow in the long piping runs between the receiver and the hot and cold thermal storage tanks. The tanks are located in the receiver structure behind the heat absorption panels as shown on Figures 2-30 and 2-31.

The cold surge tank was sized such that at the normal operating salt level, the tank is three-quarters full of salt, with that salt inventory sufficient to provide 120 seconds of full load salt flow. The tank is a right cylinder with an internal diameter of 1.14 m (3.75 ft) and an internal height of 4.08 m (13.4 ft). The tank heads are ellipsoidal. The tank has a design pressure of 4.14 MPa (600 psi) and a design temperature of 538°C (1000°F). It is constructed of 38 mm (1.50 in) thick 304 stainless steel. Heat loss from the tank is minimized with external insulation.

A pressurized air space exists above the salt level in the cold tank. The tank is initially pressurized from the air supply tank (see Figure 2-20) with the nominal salt level in the tank. The salt level (and therefore tank pressure) is maintained by the control valve in the riser line between the cold carbonate salt pump and the cold surge tank. The cold tank and associated piping are protected with a pressure relief valve located off the top of the cold tank.

The hot surge tank has the same internal volume and dimensions as the cold surge tank. At the normal operating salt level the tank is one-quarter full; thus, the ullage volume is sufficient to accept the salt volume from the cold tank in the event of an emergency receiver cooling event. The tank has a design pressure of 0.35 MPa (50 psi) and a design temperature of 982°C (1800°F). It is constructed of 35 mm (1.375 in) thick Inconel 617 to meet these design pressure/temperature conditions, with a 3.2 mm (.125 in) thick layer of Inconel 600 on tank I.D. for corrosion resistance to the carbonate salt. Heat loss from the tank is minimized with external insulation. The potential for the need of an internal insulation liner for the hot surge tank was not investigated in this study. An analysis of possible thermal transients in the hot surge tank could indicate the need for such a liner to mitigate thermal transient effects on the tank pressure boundary.

The air space above the salt level in the tank is vented to the atmosphere. The salt level in the tank is controlled by the valve in the downcomer line between the hot surge tank and hot salt thermal storage tank.

2.3.2.6 Piping and Valves

The receiver piping consists primarily of the connections to the main riser and downcomer piping, the panel interconnecting piping, vent and drain lines, and overnight recirculation system piping. Pipe material is 304 stainless steel for those lines through which cold salt flows and Inconel 617 with an Inconel 600 liner for those lines through which hot salt flows. All piping is routed to provide venting of air during start-up and drainage of salt during shutdown. All piping is insulated to minimize heat loss and to assure proper operation of the heat tracing which is installed on all pipe runs.

Flow to the east and west halves of the receiver absorber surface is individually controlled to maintain a receiver salt outlet temperature of 954°C (1750°F) through the positioning of flow control valves in the inlet piping to each half of the receiver. The receiver cold surge tank level is controlled by a valve in the riser line between the cold carbonate salt pump and the cold surge tank. Similarly, the hot surge tank level is controlled by a valve in the downcomer line between the hot surge tank and the hot thermal storage tank. The receiver absorption panel assemblies are provided with isolation valves to assure complete venting of air from the system during start-up and complete drainage of salt from the system during shutdown.

The basic material of construction for valves in contact with cold salt is 304 stainless steel while those valves in contact with hot salt would combine a corrosion resistant material such an Inconel 600 with a strength material such as Inconel 617. In addition to meeting the basic strength requirements for the operating temperatures and pressures and providing the necessary control of salt flow, the valves must prevent leakage of salt to the atmosphere at the location where the valve stem penetrates the valve pressure boundary. Potential leakage seals include packing, metal bellows seals, or freeze seals. Extensive testing of valve seals is currently in progress for valves in service with molten nitrate salt. Development of valves intended for molten carbonate salt service is discussed in Section 4.2.3.1 of this report.

2.3.2.7 Cavity Structure

The receiver structure that forms the C-shaped configuration consists of a network of vertical trusses, horizontal trusses, bracing and support steel. The structure transmits dead loads, wind loads, and seismic loads to the top of the tower. An aperture opening exists in the structure, and a door is provided to close the aperture during the standby mode. Structural steel is used for support of major parts such as panels, surge tanks, air tank, piping, door, door mechanism, and receiver cavity casing. Design methods for a receiver structure are conventional and as such no effort was expended in its detailed design. A general arrangement of structural members was defined to determine overall space requirements for the receiver module on top of the tower and to estimate the weight of the structural steel.

2.3.2.8 Door and Door Mechanism

As with the cavity structure, the door and door mechanism were defined only in terms of a general arrangement for space and weight requirements. The receiver door is a motorized, vertical, biparting door with an initial motion outward (away from the tower) in the opening direction and a final motion inward to compress a high-temperature seal in the closing direction. The door configuration consists of a network of horizontal and vertical trusses. These trusses support a series of packed insulation panels. One half of the door serves as a counterweight for the other half. The door is opened and closed through a chain and sprocket drive mechanism attached to the upper door, which is automatically controlled. A schematic of the door and door mechanism is illustrated in Figure 2-32.

2.3.2.9 Ancillary Equipment

The ancillary equipment of the solar receiver includes trace heating, insulation, instrumentation, air supply and the overnight recirculation system.

Trace heating is provided to prevent both thermal shocking of the receiver components and freezing of the salt. Electrical resistance heaters are applied to the components. The trace-heating system is insulated and is controlled by thermocouple feedback. An experience base for the specification and application of heat trace equipment for solar receivers has been and is continuing to be developed in programs at the Central Receiver Test Facility.

Insulation is provided on the individual components, tanks, piping, panels, and door to minimize heat loss and provide proper, efficient operation of heat tracing. Insulation on the perimeter of the aperture serves as a shielding for the structural steel. This shielding is needed to protect the entire aperture perimeter from spillage during normal operation and to protect primarily the east side of the receiver from high fluxes. These high fluxes result when large numbers of heliostats are defocused simultaneously after certian types of electrical power or salt flow failures have occurred.

Instrumentation is provided for control and monitoring of the receiver operation. Thermocouples and flux gages at the receiver inlet and outlet and at various locations throughout the absorption panels control salt flow through the receiver to maintain the required salt outlet temperature; salt flow to each half of the receiver is controlled and monitored. The surge tanks are provided with level, pressure, and temperature indicators. The need to develop instrumentation compatible with the high temperature molten salt service is discussed in Section 4.2.4.2.

Receiver Door Configuration

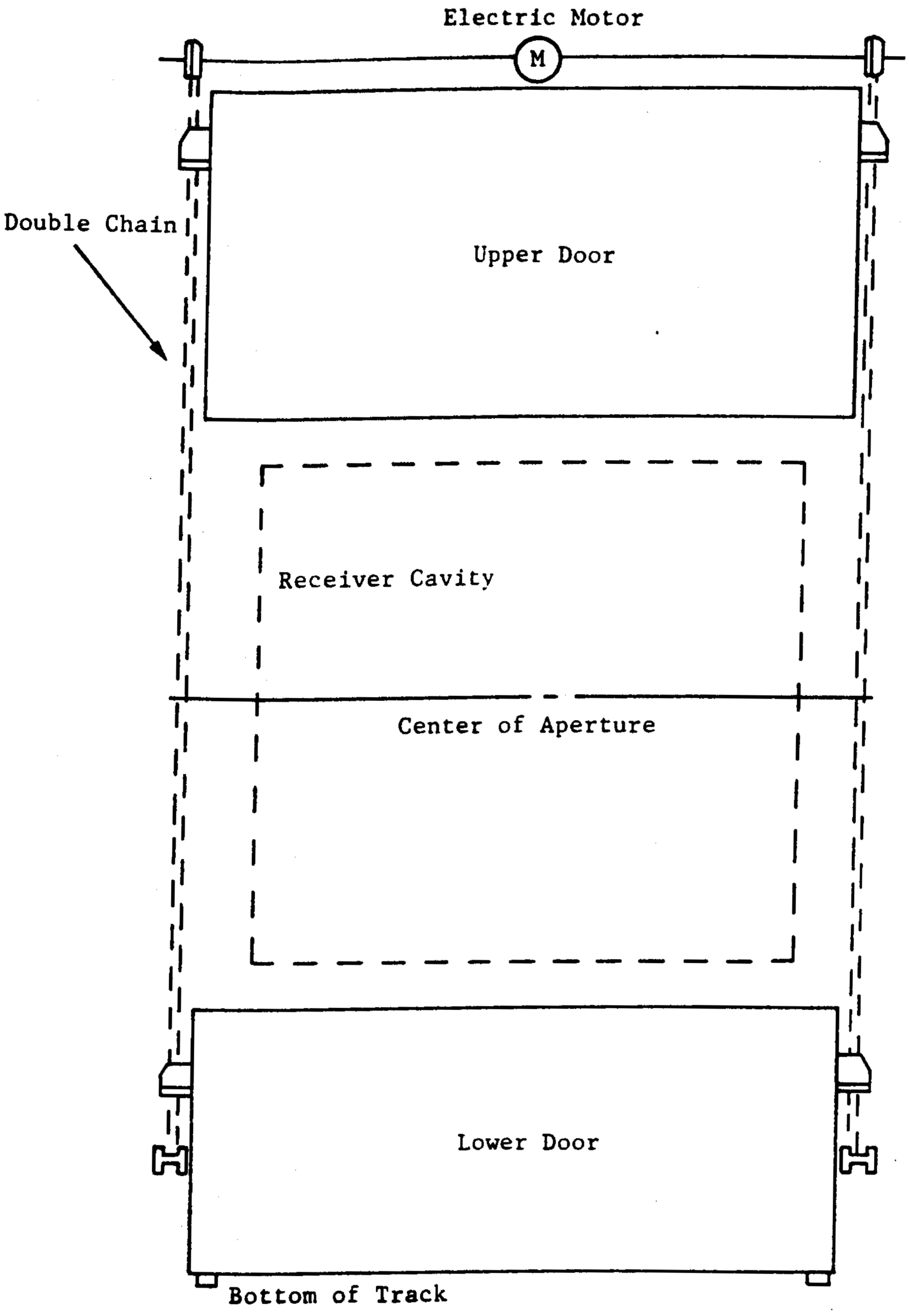

Figure 2-32

The air supply system serves to not only supply air pressure to the cold surge tank for daily startup and pressure maintenance, but also to provide air pressure for emergency blowdown cooling in case a loss of power to the heliostat field. The air supply system contains the air tank at 10.3 MPA (1500 psi), connecting piping, a compressor, and control, isolation, and check valves.

2.3.2.10 Recirculation System

When the receiver is in overnight standby with the aperture door closed, it is maintained at the cold salt temperature by circulating salt from the cold salt storage tank, through the receiver panels in parallel downflow, and back to the cold tank. This system allows for quicker receiver start-up in the morning and reduces parasitic electrical energy usage during receiver standby by reducing the amount of heat trace which must be operated on the receiver and on the riser and downcomer piping in the tower.

2.3.2.11 Materials

Materials were selected to provide adequate strength and corrosion resistance in the receiver operating environment. In the cold carbonate salt environment, 304 stainless steel has the necessary combination of corrosion resistance and strength. In the absorber panels and the hot carbonate salt regions of the receiver where material temperature reach a maximum of 982^{o}C (1800^{o}F), Inconel 617 was selected to provide the required strength, and Inconel 600 was chosen as a corrosion resistant liner for the Inconel 617. The detailed discussion of materials selection is in Appendix A.

A summary of the structural weights of the receiver is listed below. During normal operation the receiver contains approximately 22,680 kg (50,000 lb) of molten carbonate salt, resulting in an operating weight of approximately 335,200 kg (739,000 lb).

Receiver Weight Summary

Item	Weight kg	 lb
Panel Assemblies	63,500	140,000
Hot Surge Tank	7,440	16,400
Cold Surge Tank	6,350	14,000
Air Tank	1,410	3,100
Piping	11,340	25,000
Doors and Door Hardware	19,960	44,000
Structural Steel, Insulation, and Miscellaneous	202,530	446,500
Total Dry Weight	312,530	689,000
Salt	22,680	50,000
Total Operating Weight	335,200	739,000

2.3.3 Thermal Energy Storage

2.3.3.1 Energy Storage Requirements

The thermal energy storage system stores thermal energy for use in operating the chemical plant and steam generator at a nominal rated capacity of 35 MW_t (119.3 x 10^6 Btu/hr). The storage medium is a molten mixture of carbonate salt. The storage capacity allows for continuous operation of the chemical plant during cloud transients and also permits continued collection of solar energy during temporary chemical plant shutdowns. The maximum storage capacity of the system is 84 MWh_t (287 x 10^6 Btu), which is sufficient to provide operation of the chemical plant at 90% of rated load for about 2.6 hours. The operational and economic optimum configuration for a salt storage system of this size is a dual hot and cold tank system. Hot salt at 954°C (1750°F) is stored in one dedicated tank. A second dedicated tank stores the cold salt at 514°C (957°F) after the thermal energy has been extracted.

The hot and cold storage tanks are sized to hold the entire salt inventory in a single tank, should it be necessary to empty one of the tanks for repair. The salt inventory is 521,500 kg (1,150,000 lb) which requires a storage volume of 261 m^3(10,300 ft^3). The tanks are designed and insulated to minimize thermal losses. Heat trace is provided on the outside of the tank pressure boundaries to preheat the tanks above the salt melting point and to maintain the tanks and salt inventory at the nominal cold salt temperature of 514°C (957°F) during periods of plant shutdown. Tank foundations are insulated so that the underlying soil maintains its bearing strength and supports the tanks satisfactorily.

2.3.3.2 Thermal Energy Storage Design Description

The thermal energy storage system is the interface between the receiver system and the chemical plant. It is designed not only to store thermal energy, but also to decouple the systems that interface with it. The storage system acts as a buffer that allows the receiver to operate independently from the chemical plant and vice versa. The major components are shown on Figure 2-5 as are their interfaces with the other systems. A plot plan showing the locations of the components is presented in Figure 2-50.

2.3.3.3 Thermal Storage System Operation

The storage system is designed to supply and accept molten salt to or from the receiver and chemical plant. Figure 2-33 is a simplified flow schematic. In the morning after the solar portion of the plant is started up, cold salt is pumped from the cold storage tank to the receiver. Once the salt is heated to the specified temperature, the salt is returned to the hot salt storage tank. The operation of the thermal storage system as part of the overall system is described further in Section 2.7.2

2.3.3.4 Hot Salt Storage Tank

The hot salt storage tank is designed to contain the molten salt at a temperature of 954°C (1750°F). The tank shown in Figure 2-34 is designed as an internally and externally insulated tank with a cooling circuit in the wall and floor which circulates the salt from the cold tank to maintain the 304 stainless steel containment vessel at approximately 516°C (960°F).

The cooling circuitry consists of 38 mm (1-1/2") O.D. tubes on 64 mm (2-1/2") centers. There are two circuits connected in series, one for the floor and one for the wall. The cold salt flows into the floor inlet header, through the circuit to the floor outlet header. Flow then enters the wall inlet header around the base of the wall and flows up through the helical tubes to the outlet header at the top of the tank.

An insulating annulus was designed to reduce heat transfer between the hot salt inventory and the cooling circuit as shown on Figure 2-34. The annulus is filled with 25 mm (1") spheres of alumina with a packing factor of 60%. Alumina spheres of this size can readily be produced. Sphere size limits the interstices to roughly 6 mm (1/4") which, in turn, limits the free convection of the salt in the annulus. As a result of our materials evaluation (Appendix A), alumina was chosen for its corrosion resistance and compressive strength properties; the strength is adequate to prevent crushing of the spheres. This method of insulating was chosen instead of the honeycomb apparatus described in the proposal because of the difficulties, and therefore costs, associated with fabrication. In addition, the material requirements, by weight, for the honeycomb arrangement were almost twice the requirements for the alumina spheres.

The salt in the annulus is in communication with the bulk of the hot salt inventory through holes at the bottom of the cylindrical baffle. Thus, the hydrostatic heads in the annulus and the bulk liquid pool are equal, and the

Flow Schematic Of The Thermal Energy Storage Subsystem

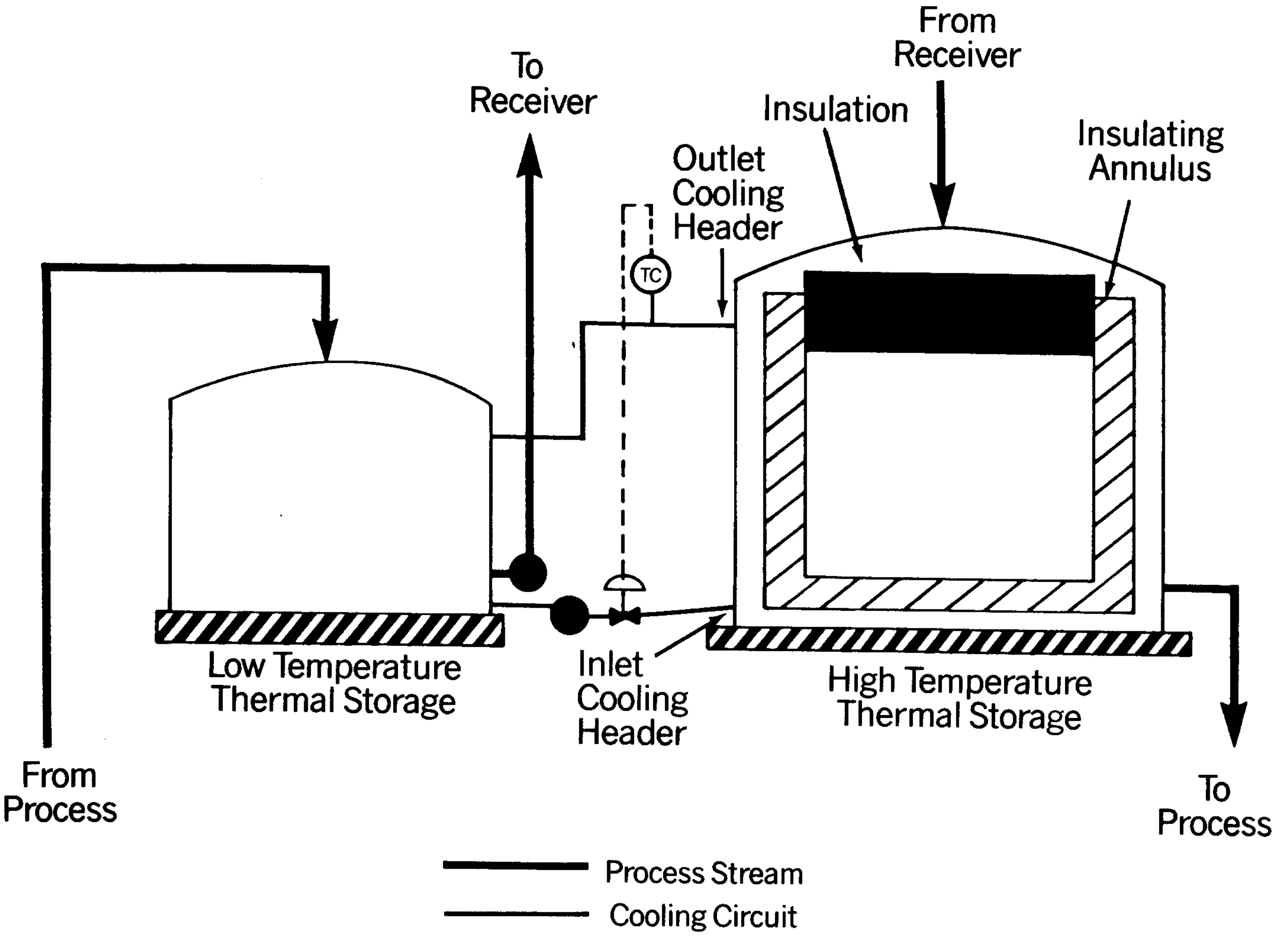

Figure 2-33

heights of the two liquid columns vary only in proportion to the differences in their relative densities (which is minimal). Liquid is withdrawn from the bottom center of the hot tank to minimize disturbance of the insulating fluid in the annulus.

The tank rests on 102 mm (4") of sand, to allow for thermal expansion, and 152 mm (6") of insulating firebrick which allows the concrete foundation and surrounding soil to be maintained at less than 93°C (200°F). Fiberous insulation [230 mm (9 in.)] on the wall and roof maintains surface temperatures at less than 66°C (150°F). The external insulation is protected by an aluminum jacket.

2.3.3.5 Cold Salt Storage Tank

The cold salt storage tank shown in Figure 2-35, is designed to store molten salt at 514°C (957°F). The tank consists of a 304 stainless steel shell with a domed roof. The tank's external insulation and foundation are identical to the hot salt storage tank previously described.

2.3.3.6 Ullage Gas Control System

Although not addressed in this study, an ullage gas control system may be needed to prevent damaging differential pressures from developing between the inside of the storage tanks and the atmosphere.

2.3.3.7 Salt Inventory

Molten salt is used as both the heat transfer fluid and storage media. The molten salt inventory of the plant is 521,500 kg (1,150,000 lb). In addition to the salt in the system, 3% of the total inventory is stored, in dry form, for makeup. During the normal operation of the plant, a significant amount of salt is required to fill the piping and components of the system.

2.3.3.8 Thermal Energy Storage Performance

The maximum rate at which energy is transferred from the hot salt to the cooling circuit is 0.30 MW_t (1.03×10^6 Btu/hr). About 4%, or 0.012 MW_t (0.041×10^6 Btu/hr), of this energy is lost in the salt piping between storage tanks. The thermal loss for each tank is 0.061 MW_t (0.209×10^6 Btu/hr). Therefore, the total rate of unrecoverable thermal losses for the storage system is 0.135 MW_t (0.46×10^6 Btu/hr).

REVISIONS

NO.	DESCRIPTION	DATE	APPROVAL

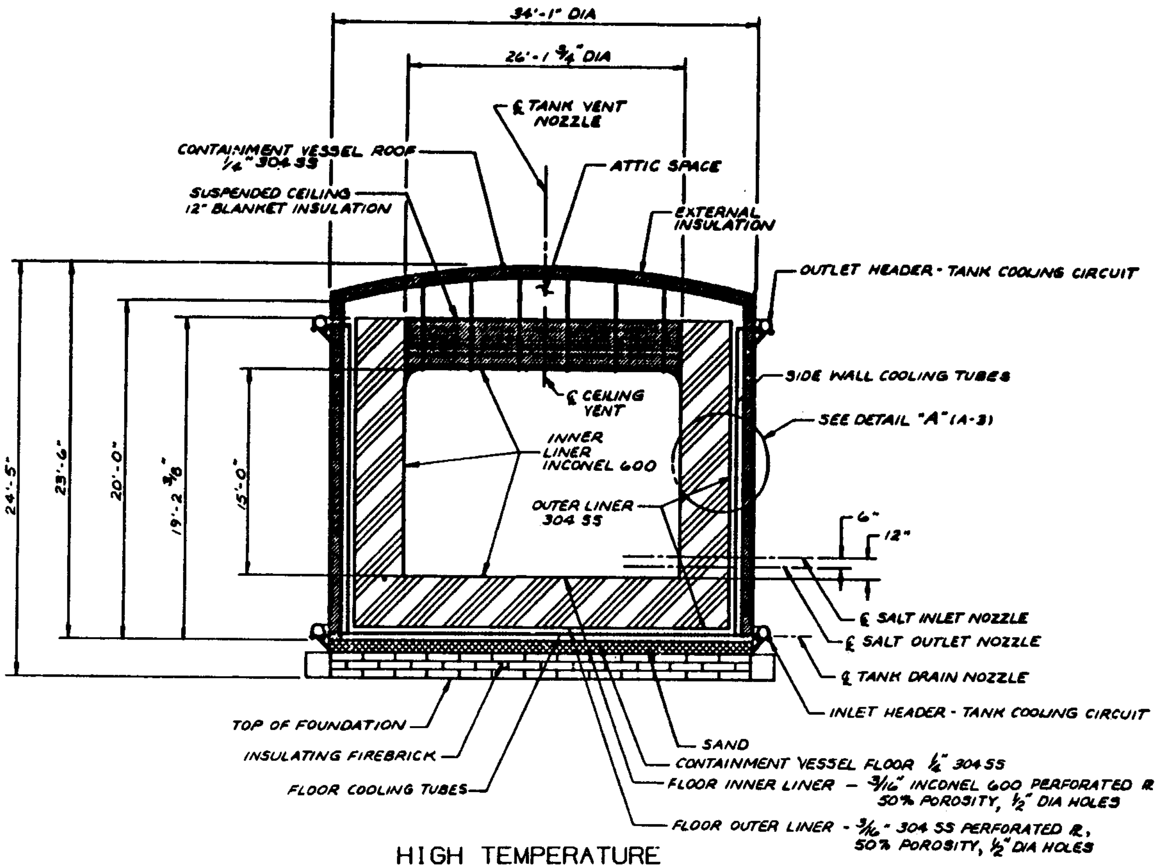

HIGH TEMPERATURE
THERMAL STORAGE TANK

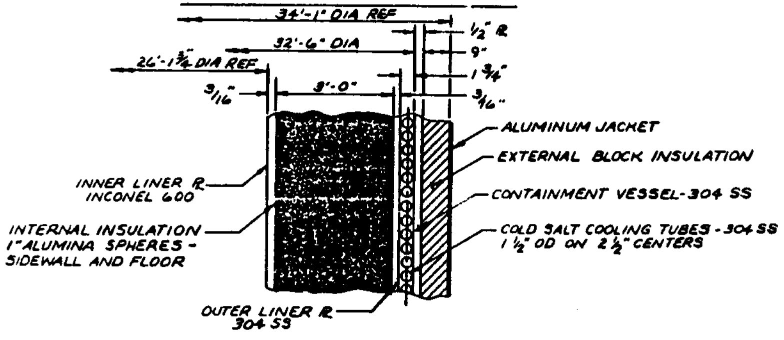

DETAIL "A" (C-2)

NOTES

1. CONTAINMENT VESSEL TO BE DESIGNED IN ACCORDANCE WITH REQUIREMENTS OF SECTION VIII, DIVISION 1 OF THE ASME BOILER AND PRESSURE VESSEL CODE.
2. CONTAINMENT VESSEL DESIGN CONDITIONS:
   PRESSURE = 18 PSIG
   TEMPERATURE = 1000 °F
3. HOT SALT OPERATING TEMPERATURE = 1750 °F
4. APPROX. DRY WEIGHT = 1,129,000 LBS
   APPROX. MAX OPERATING WEIGHT = 2,277,000 LBS
5. MATERIAL: AS NOTED

THE BABCOCK AND WILCOX COMPANY

DWN. BY M.A. SMITH
CHKD. BY M.Pehrish
PASSED BY
APPVD. BY
STD. SPL. DATE 4/18/85
894-0025-45
DO NOT SCALE - USE DIMENSIONS ONLY

SANDIA NATIONAL LABORATORIES
SOLAR FUELS AND CHEMICALS
SYSTEM DESIGN STUDY

HIGH TEMPERATURE
THERMAL STORAGE TANK

SCALE N.T.S.

THE BABCOCK & WILCOX CO.
POWER GENERATION GROUP

DWG. NO. 180000 C
REV. 0

Figure 2-34

179999C

REVISIONS

NO.	DESCRIPTION	DATE	APPROVAL

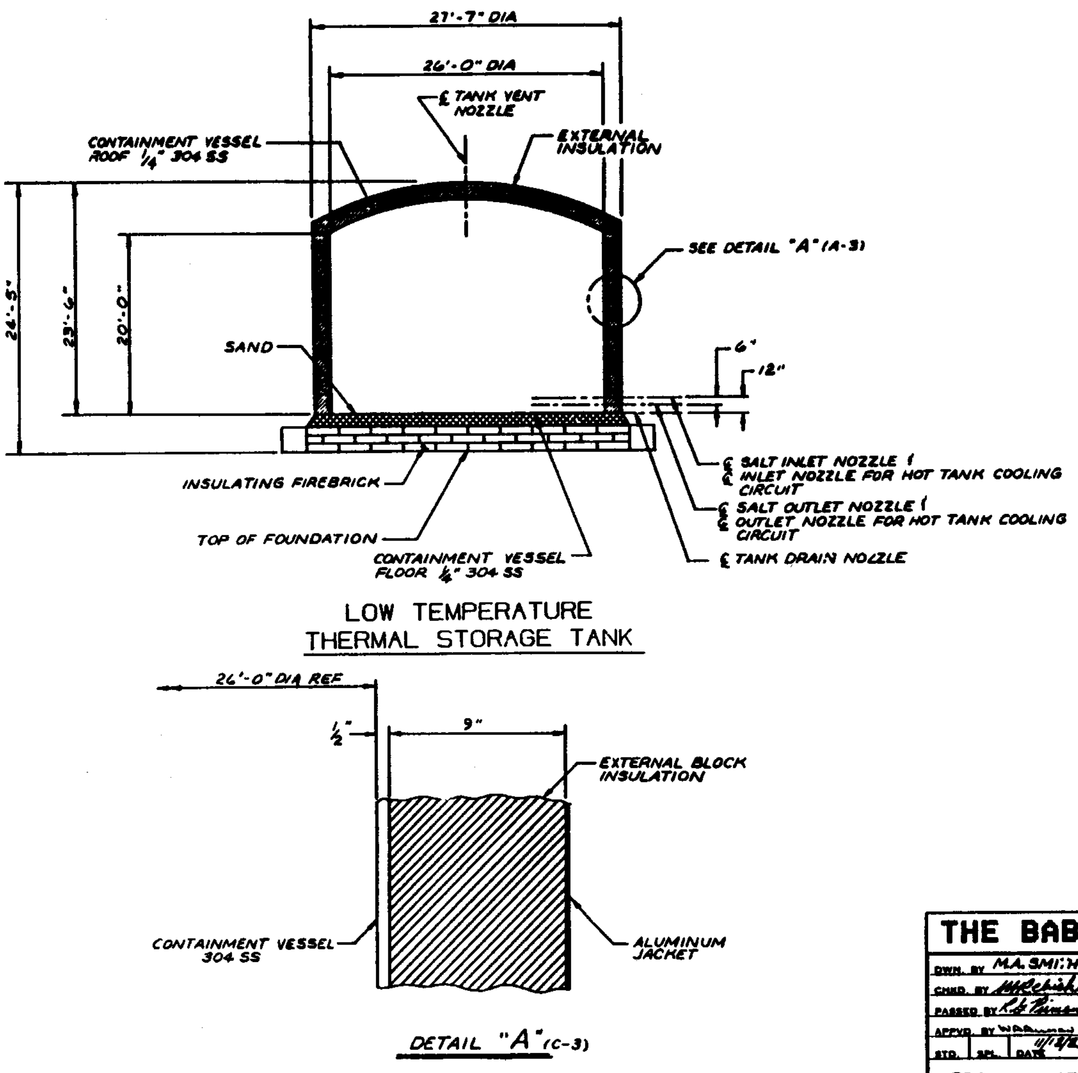

NOTES

1. CONTAINMENT VESSEL TO BE DESIGNED IN ACCORDANCE WITH REQUIREMENTS OF SECTION VIII, DIVISION 1 OF THE ASME BOILER AND PRESSURE VESSEL CODE.
2. DESIGN CONDITIONS:
   PRESSURE = 18 PSIG
   TEMPERATURE = 1000°F
3. COLD SALT OPERATING TEMPERATURE = 957°F
4. APPROX. DRY WEIGHT = 105,000 LBS
   APPROX MAX OPERATING WEIGHT = 1,255,000 LBS
5 MATERIAL: AS NOTED

THE BABCOCK AND WILCOX COMPANY

DWN. BY M.A. SMITH
CHKD. BY
PASSED BY
APPVD. BY
STD. SPL. DATE 11/13/85
894-0025-45
DO NOT SCALE - USE DIMENSIONS ONLY.

SANDIA NATIONAL LABORATORIES
SOLAR FUELS AND CHEMICALS
SYSTEM DESIGN STUDY

LOW TEMPERATURE
THERMAL STORAGE TANK

SCALE N.T.S.

THIS DRAWING IS THE PROPERTY OF
THE BABCOCK & WILCOX CO.
POWER GENERATION GROUP

DWG. NO. 179999 C
REV. 0

Figure 2-35

2.3.4 Steam Generator

The Steam Generator System (SGS) is a recirculating water system consisting of three separate counter-flow heat exchangers (intermediate heat exchanger (IHX), superheater, evaporator). The SGS extracts energy from the carbonate salt to produce steam for the chemical process and for cogeneration of electrical power. The SGS is designed to supply superheated steam at 7.93 MPa (1150 psia) and 387°C (728°F) when supplied with feedwater at 135°C (275°F). The SGS is rated at a full load power level of 17.1 MW_t (58.3 x 10^6 Btu/hr).

2.3.4.1 System Description

A flow schematic of the SGS is shown in Figure 2-36. The SGS consists of the following major components:

1) Intermediate heat exchanger
2) Superheater
3) Evaporator
4) Steam drum
5) Boiler water
6) Piping and valves
7) Nitrate salt pump

Carbonate salt from the cold storage tank is mixed with salt from the carbonization process to provide IHX inlet temperature of 649°C (1200°F). In the IHX, the thermal energy is transferred to a lower temperature nitrate salt. The purpose of the intermediate flow circuit of nitrate salt is to reduce temperature differences in heat exchanger components. Also, the nitrate salt has a lower melting point (245°C/473°F) compared to the carbonate salt (397°C/747°F) and is, therefore, less likely to freeze when it passes through the superheater and evaporator.

The carbonate salt exits the IHX at 496C (925°F) and mixes with salt from the regeneration process before passing to the low temperature thermal storage tank. Meanwhile, the nitrate salt is pumped in series to the IHX, superheater and evaporator, and returned to the pump. The evaporator salt inlet temperature is controlled by mixing cold salt with the salt exiting the superheater.

Steam Generator Schematic

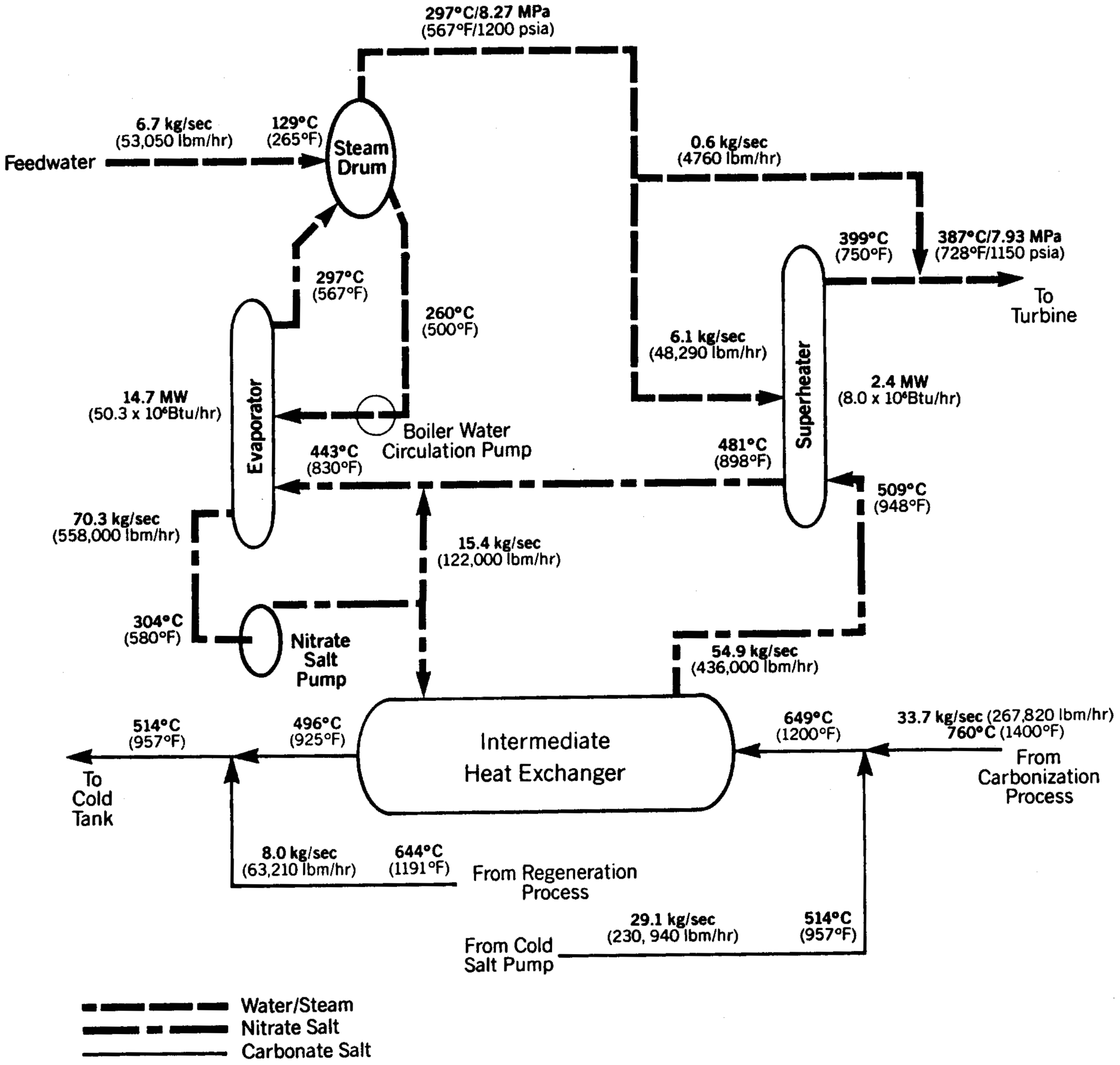

Figure 2-36

Recirculating systems are used throughout the power industry where frequent startups and load swings must be accommodated. In the steam drum, the feedwater is mixed with recirculated water and pumped to the evaporator where a steam/water mixture is produced. The steam/water mixture is returned to the drum where the steam and water phases are separated. The saturated steam is then superheated to 387°C (728°F). The design steam flow rate to the turbine is 6.68 kg/sec (53,050 lbm/hr).

2.3.4.2 Component Description

The concept selected for each of the heat exchanger components, shown in Figures 2-37 through 2-39, is a horizontal U-tube, U-shell configuration with inlet and outlet legs in a common vertical plane. U-tube configurations offer compact tube bundles and tube flexibility to readily accommodate tube-to-shell and tube-to-tube differential thermal expansion during normal and transient operations. The U-shell configuration is used because tube-side temperature differences are large and would induce high thermal stresses in a single tubesheet and because shell-side upper and lower leg temperature differences are large and would induce high thermal stresses in a single straight shell. Each of the heat exchangers is arranged for counterflow heat transfer.

For the evaporator and superheater, water/steam enters the lower leg of the tubes, flows upward around the bend, and discharges from the upper leg. Molten nitrate salt enters the shell side of the heat exchanger near the terminal of the upper, or outlet, leg and flows through the bundle to discharge near the terminal of the lower, or inlet, leg. In the IHX, the molten nitrate salt flows in the tubes while the carbonate salt is in the shell.

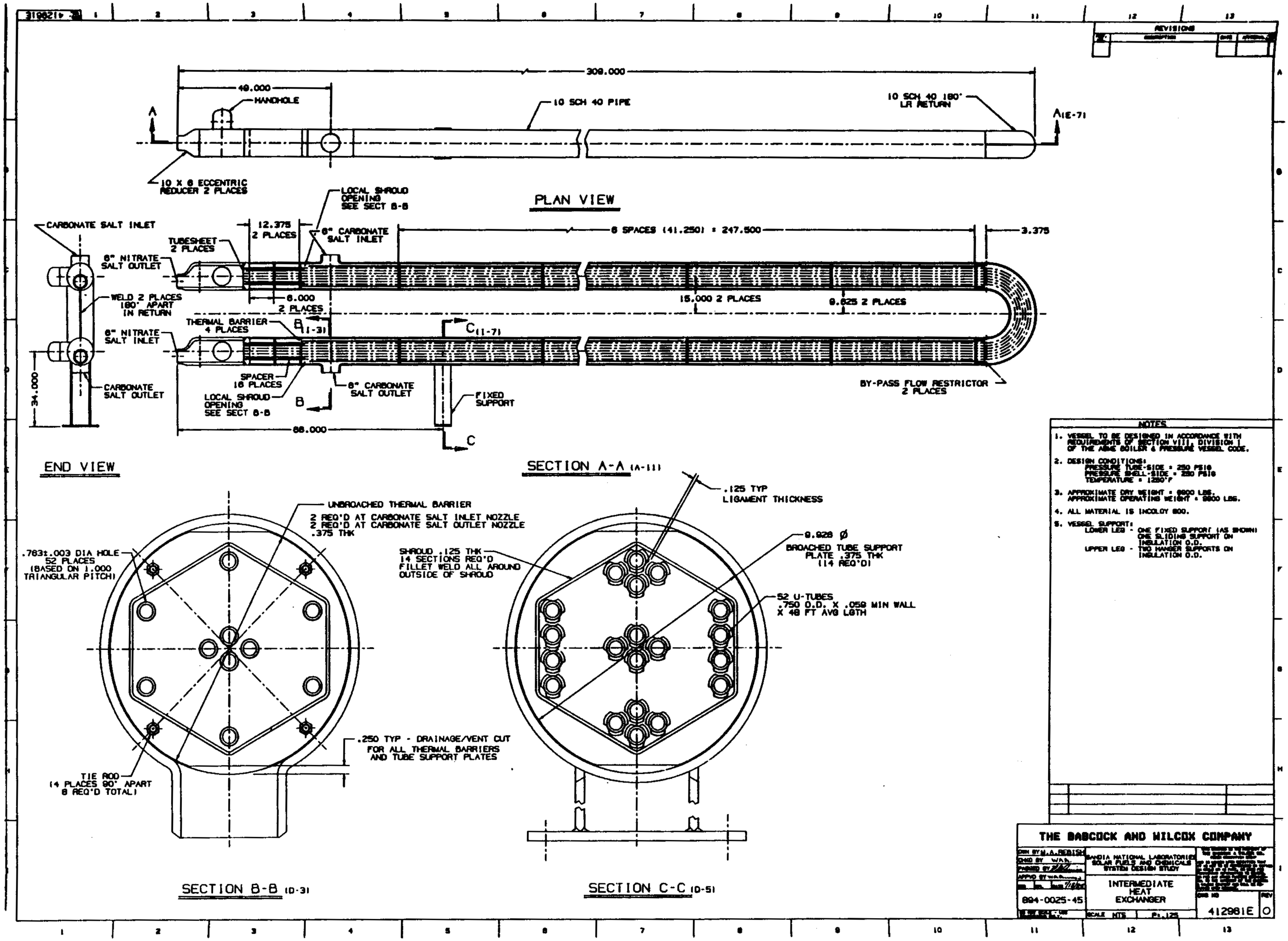
PLAN VIEW
309.000
49.000
HANDHOLE
10 SCH 40 PIPE
10 SCH 40 180° LR RETURN
10 X 6 ECCENTRIC REDUCER 2 PLACES
A
A(E-7)
LOCAL SHROUD OPENING SEE SECT B-B
12.375 2 PLACES
6" CARBONATE SALT INLET
8 SPACES (41.250) = 247.500
3.375
TUBESHEET 2 PLACES
6.000 2 PLACES
15.000 2 PLACES
9.625 2 PLACES
THERMAL BARRIER 4 PLACES
B (1-3)
C (1-7)
SPACER 16 PLACES
LOCAL SHROUD OPENING SEE SECT B-B
6" CARBONATE SALT OUTLET
FIXED SUPPORT
BY-PASS FLOW RESTRICTOR 2 PLACES
88.000
B
C
END VIEW
CARBONATE SALT INLET
6" NITRATE SALT OUTLET
WELD 2 PLACES 180° APART IN RETURN
6" NITRATE SALT INLET
CARBONATE SALT OUTLET
34.000
SECTION A-A (A-11)
.125 TYP LIGAMENT THICKNESS
9.928 Ø
BROACHED TUBE SUPPORT PLATE .375 THK (14 REQ'D)
52 U-TUBES .750 O.D. X .059 MIN WALL X 48 FT AVG LGTH
SHROUD .125 THK 14 SECTIONS REQ'D FILLET WELD ALL AROUND OUTSIDE OF SHROUD
UNBROACHED THERMAL BARRIER
2 REQ'D AT CARBONATE SALT INLET NOZZLE
2 REQ'D AT CARBONATE SALT OUTLET NOZZLE
.375 THK
.783±.003 DIA HOLE 52 PLACES (BASED ON 1.000 TRIANGULAR PITCH)
.250 TYP - DRAINAGE/VENT CUT FOR ALL THERMAL BARRIERS AND TUBE SUPPORT PLATES
TIE ROD (4 PLACES 90° APART 8 REQ'D TOTAL)
SECTION B-B (D-3)
SECTION C-C (D-5)
NOTES
1. VESSEL TO BE DESIGNED IN ACCORDANCE WITH REQUIREMENTS OF SECTION VIII, DIVISION 1 OF THE ASME BOILER & PRESSURE VESSEL CODE.
2. DESIGN CONDITIONS:
PRESSURE TUBE-SIDE = 250 PSIG
PRESSURE SHELL-SIDE = 250 PSIG
TEMPERATURE = 1250°F
3. APPROXIMATE DRY WEIGHT = 8800 LBS.
APPROXIMATE OPERATING WEIGHT = 9800 LBS.
4. ALL MATERIAL IS INCOLOY 800.
5. VESSEL SUPPORT:
LOWER LEG - ONE FIXED SUPPORT (AS SHOWN) ONE SLIDING SUPPORT ON INSULATION O.D.
UPPER LEG - TWO HANGER SUPPORTS ON INSULATION O.D.
REVISIONS
THE BABCOCK AND WILCOX COMPANY
DWN BY W.A.REBISH
CHKD BY W.A.R.
APPVD BY
894-0025-45
SANDIA NATIONAL LABORATORIES SOLAR FUELS AND CHEMICALS SYSTEM DESIGN STUDY
INTERMEDIATE HEAT EXCHANGER
SCALE NTS
DWG NO 412981E
REV 0
412981E

Figure 2-37

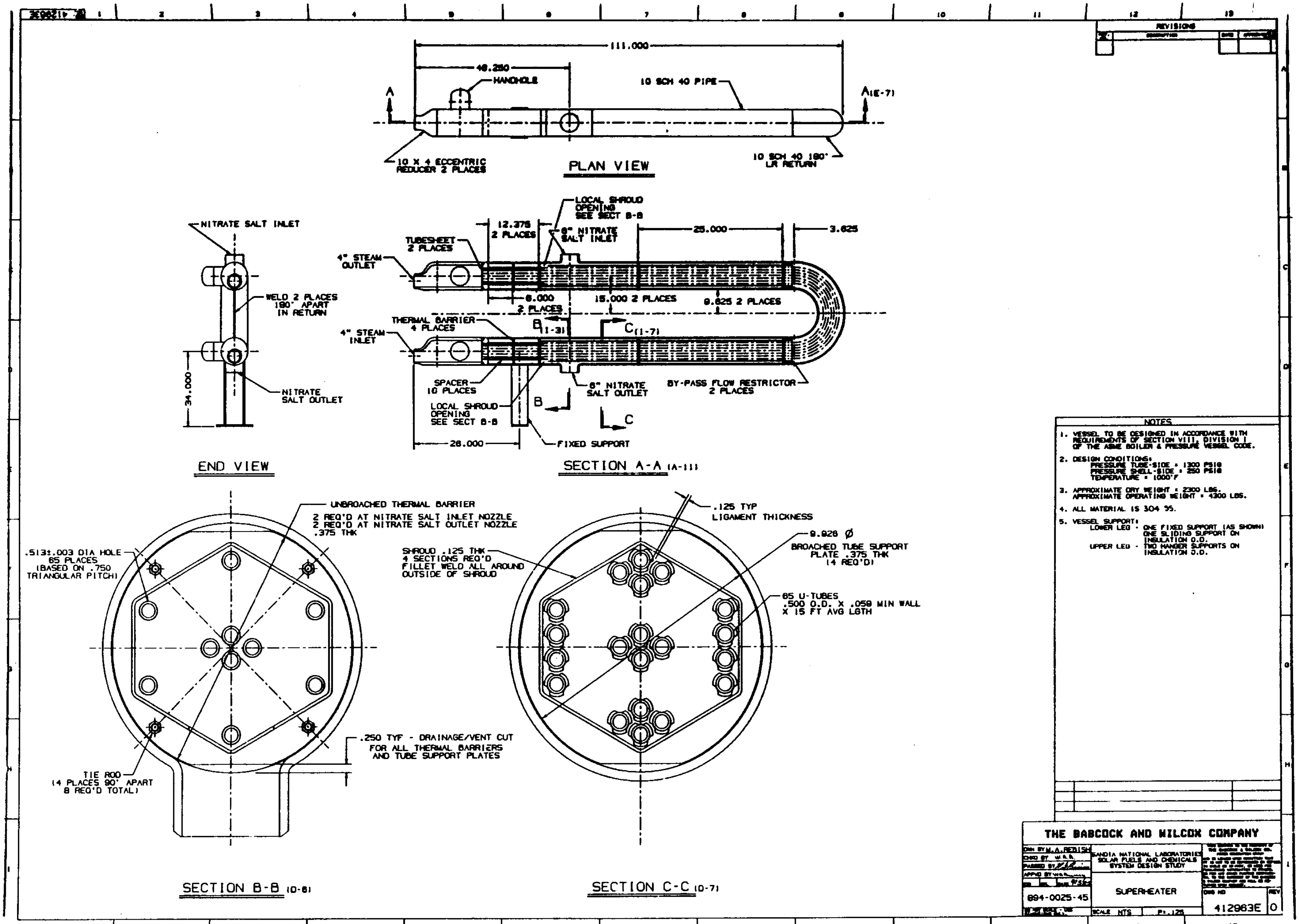

NOTES

1. VESSEL TO BE DESIGNED IN ACCORDANCE WITH REQUIREMENTS OF SECTION VIII, DIVISION I OF THE ASME BOILER & PRESSURE VESSEL CODE.
2. DESIGN CONDITIONS:
   PRESSURE TUBE-SIDE = 1300 PSIG
   PRESSURE SHELL-SIDE = 250 PSIG
   TEMPERATURE = 1000°F
3. APPROXIMATE DRY WEIGHT = 2300 LBS.
   APPROXIMATE OPERATING WEIGHT = 4300 LBS.
4. ALL MATERIAL IS 304 SS.
5. VESSEL SUPPORT:
   LOWER LEG - ONE FIXED SUPPORT (AS SHOWN) ONE SLIDING SUPPORT ON INSULATION O.D.
   UPPER LEG - TWO HANGER SUPPORTS ON INSULATION O.D.

Figure 2-38

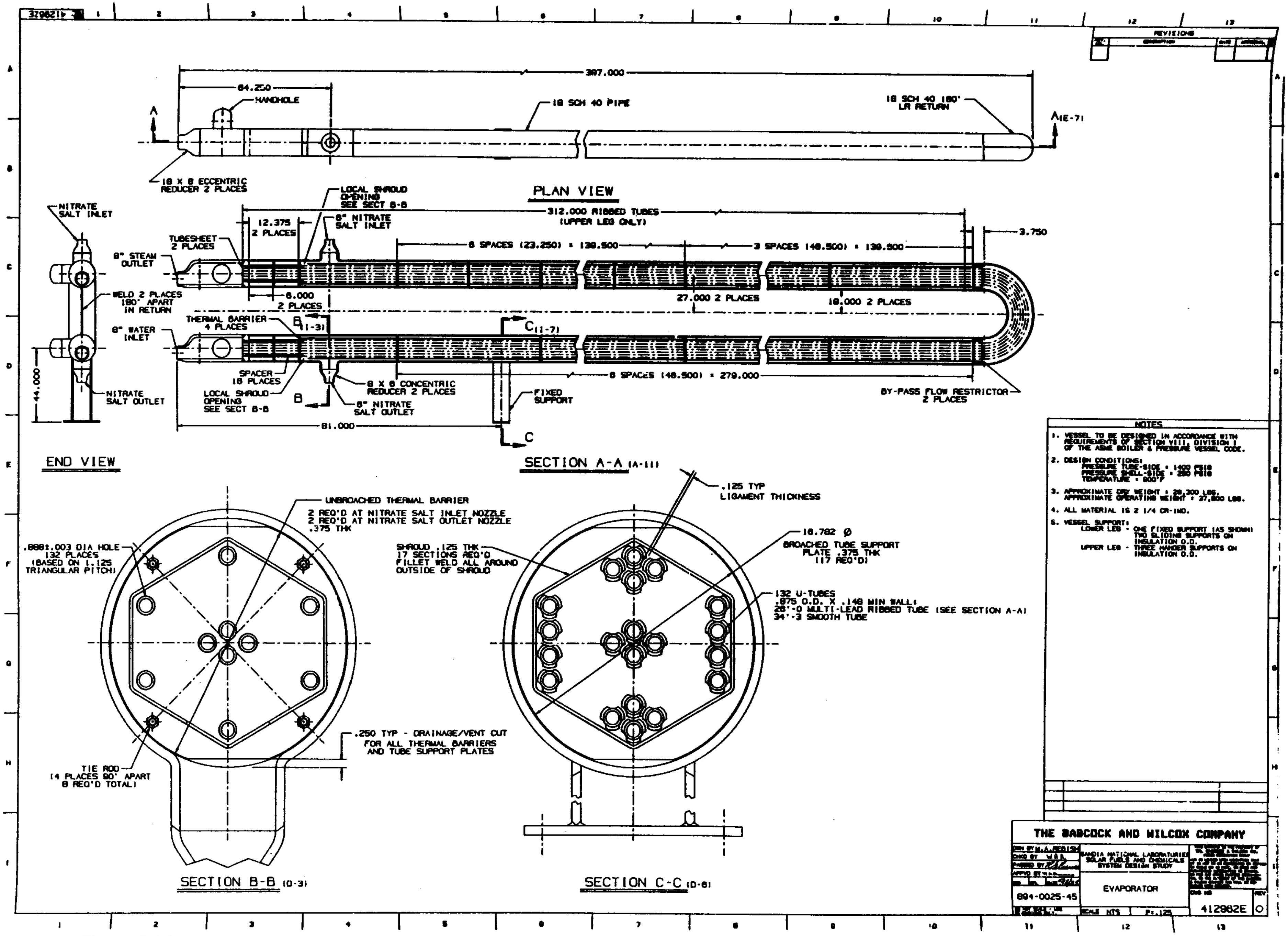

NOTES

1. VESSEL TO BE DESIGNED IN ACCORDANCE WITH REQUIREMENTS OF SECTION VIII, DIVISION I OF THE ASME BOILER & PRESSURE VESSEL CODE.
2. DESIGN CONDITIONS:
   PRESSURE TUBE-SIDE = 1400 PSIG
   PRESSURE SHELL-SIDE = 280 PSIG
   TEMPERATURE = 800°F
3. APPROXIMATE DRY WEIGHT = 28,300 LBS.
   APPROXIMATE OPERATING WEIGHT = 37,800 LBS.
4. ALL MATERIAL IS 2 1/4 CR-1MO.
5. VESSEL SUPPORT:
   LOWER LEG - ONE FIXED SUPPORT (AS SHOWN) TWO SLIDING SUPPORTS ON INSULATION O.D.
   UPPER LEG - THREE HANGER SUPPORTS ON INSULATION O.D.

Figure 2-39

The steam drum, shown in Figure 2-40, employs standard Babcock & Wilcox cyclone steam separators and scrubbers. The steam/water mixture from the evaporator is delivered to the drum where the phases are separated. The saturated steam is delivered to the superheater, while the saturated water is mixed with incoming feedwater and returned via the downcomer to the evaporator.

The heat exchangers and the steam drum are arranged in an open space frame structure providing support for the equipment and piping. All components except the steam drum are located at grade level. The drum is elevated high enough to provide adequate net positive suction head for the recirculation pumps.

2.3.4.3 Materials

Materials were selected to provide adequate strength and corrosion resistance in the operating environments with the additional objective of minimizing base material costs. The evaporator operates at temperatures up to 449°C (840°F). Consequently, 2-1/4 Cr-1 Mo was considered necessary for the increased mechanical strength and resistance to nitrate salt corrosion. The superheater operates at 509°C (948°F) and therefore Type 304 stainless steel was selected for resistance to nitrate corrosion.

With temperatures up to 649°C (1200°F), Incoloy 800H was chosen as the material for the IHX to meet strength and carbonate salt corrosion resistance requirements. Carbon steel was chosen for the relatively low temperature steam drum application.

2.3.4.4 Thermal-Hydraulic Design

The required heat transfer surface area and number and length of tubes were determined as a function of specified fluid flow rates and temperatures, tubeside pressure drop limitations, and tube material and configuration. Individual heat exchanger geometric characteristics and performance characteristics are described in Tables 2-34 and 2-35, respectively.

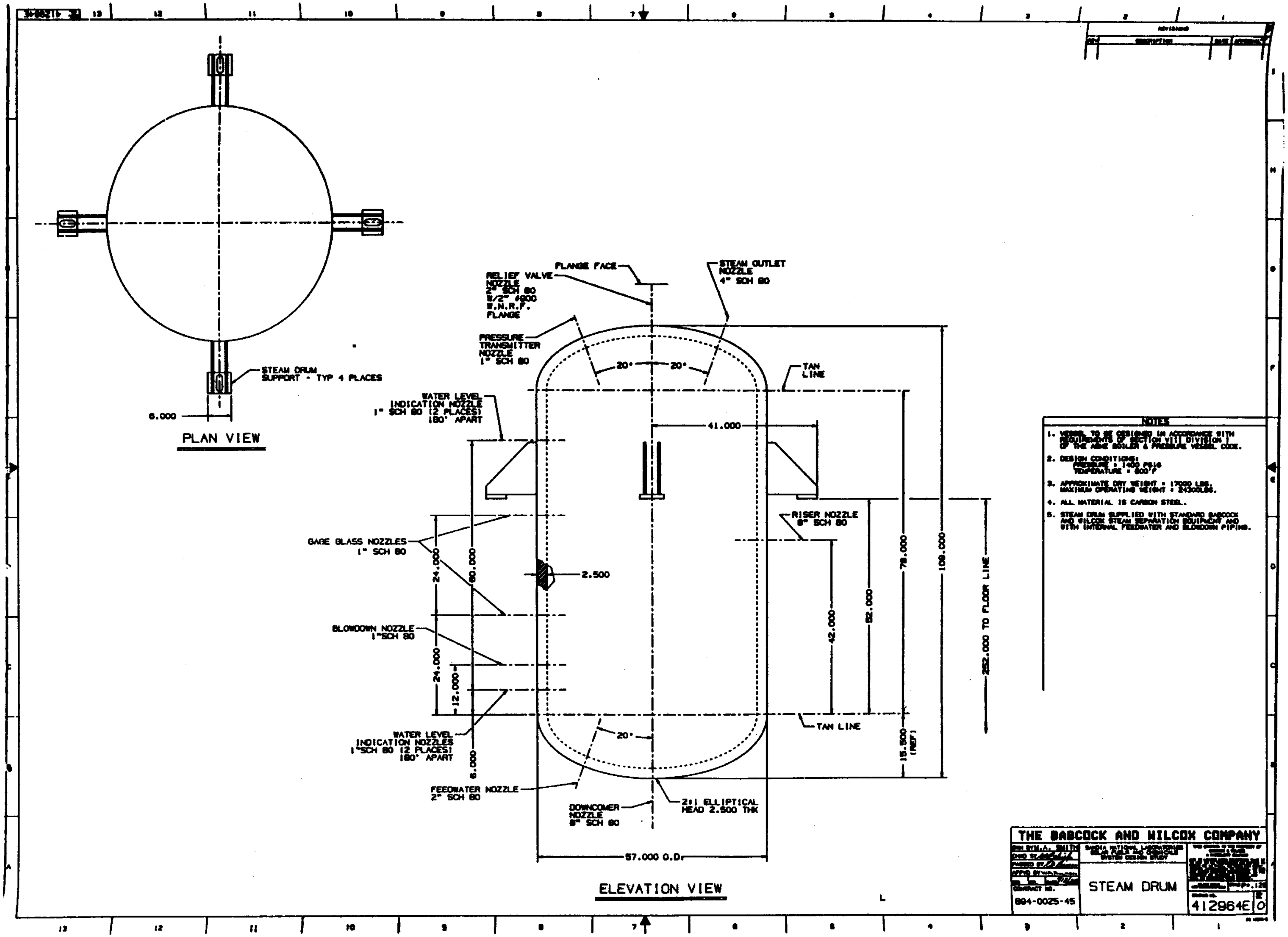

NOTES

1. VESSEL TO BE DESIGNED IN ACCORDANCE WITH REQUIREMENTS OF SECTION VIII DIVISION I OF THE ASME BOILER & PRESSURE VESSEL CODE.
2. DESIGN CONDITIONS:
   PRESSURE = 1400 PSIG
   TEMPERATURE = 800°F
3. APPROXIMATE DRY WEIGHT = 17000 LBS.
   MAXIMUM OPERATING WEIGHT = 24300LBS.
4. ALL MATERIAL IS CARBON STEEL.
5. STEAM DRUM SUPPLIED WITH STANDARD BABCOCK AND WILCOX STEAM SEPARATION EQUIPMENT AND WITH INTERNAL FEEDWATER AND BLOWDOWN PIPING.

Figure 2-40

TABLE 2-34 HEAT EXCHANGER GEOMETRIC CHARACTERISTICS

Component	Main Shell O.D. m (in.)	Total Length m (ft)	Tube Dimensions OD x Wall mm (in.)	No. of Tubes	Avg. Active Tube Length m (ft.)	Primary Surface Area m2 (ft2)
IHX	.27 (10.75)	7.87 (25.8)	19.1 x 1.65 (.75 x .065)	52	14.4 (47.4)	42.7 (460)
Evaporator	.46 (18.0)	10.1 (33.1)	22.2 x 3.76 (.875 x .148)	132	17.6 (57.9)	156.1 (1680)
Superheater	.27 (10.75)	2.82 (9.25)	12.7 x 1.65 (.50 x .065)	65	4.6 (15.1)	10.1 (109.1)

TABLE 2-35 HEAT EXCHANGER PERFORMANCE CHARACTERISTICS

Component	Salt velocity m/sec (ft/sec)	Mean Shell Side H.T.C.* W/m^2°C (Btu/hr-ft^2°F)	Mean Tube Side H.T.C.** W/m^2°C (Btu/hr-ft^2°F)	Mean Tube Wall H.T.C.* W/m^2°C (Btu/hr-ft^2°F)	Mean Overall H.T.C.* W/m^2°C (Btu/hr-ft^2°F)	Surface Design Margin (%)
IHX	2.2 (7.3)	12,966 (2284)	8282 (1459)	10,786 (1900)	3168 (558)	30
Evaporator	.73 (2.4)	2731 (481)	16,378 (2885)	6676 (1176)	1618 (285)	30
Superheater	2.5 (8.3)	5007 882)	7113 (1253)	11,087 (1953)	2083 (367)	30

* Heat transfer coefficient based on tube OD

** Heat transfer coefficient based on tube ID

The remainder of this section is devoted to a presentation of the other important thermal-hydraulic features of the selected steam generator component designs.

Salt-Side Pressure Relief - Nitrate salt-side pressure relief is required to prevent over pressurization in the event of a heat exchanger tube water/steam leak. Rupture disks have been selected for this purpose because: they avoid the unique possibility of salt freezing in a valve, which would prevent the valve from properly reseating; the chances of maintaining leak tightness over extended periods are greater; inertia is minimal, thus minimizing time to relieve; and cost is the least of any known suitable device. The rupture disks are placed in piping which tees off from the main nitrate salt piping at two locations: between the superheater and evaporator and downstream of the evaporator. The rupture disc piping may be routed to the nitrate pump sump tank or to a suitable blowdown tank.

Design to Preclude Departure from Nucleate Boiling - In evaporators, departure from nucleate boiling (DNB) can lead to under-deposit corrosion in the presence of water side deposits. This corrosion can occur either rapidly or over a long period depending on heat flux and boiler water purity. To prevent DNB, the evaporator design employs multi-lead ribbed tubing for the last 9.76 m (32 ft) of the upper or steam outlet leg. This construction, illustrated in Figure 2-41, produces a swirling flow and centrifugal forces that keep the tube surface wetted and maintain nucleate boiling to a higher quality for a given pressure, heat flux, and mass flow than with a smooth-bore tube of the same dimensions.

Cross-Section of Ribbed Tubing

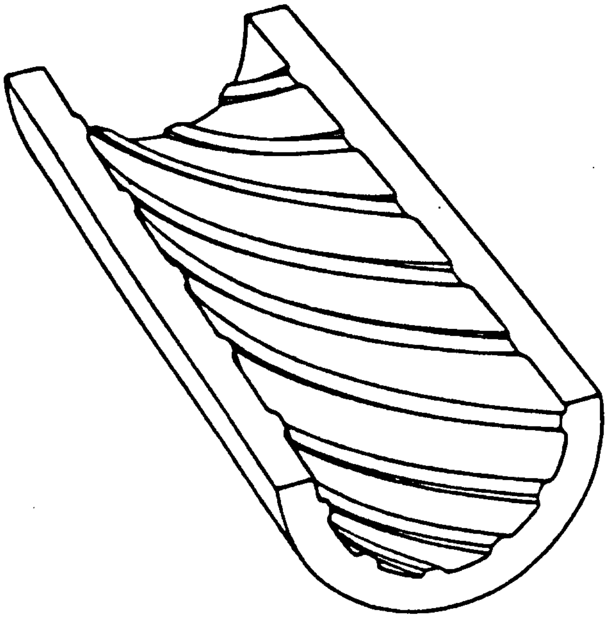

Figure 2-41

Shell-Side Flow Distribution - Because the thermal conductivity of the molten salt is relatively low, the overall resistance to heat transfer is dominated by the shell-side heat transfer resistance. Consequently, salt velocity is increased to promote efficient heat transfer within salt-side pressure drop constraints and the limits necessary to preclude tube vibration. Salt inlet flow distribution baffles control tube impingement velocities and limit excitation frequencies. Uniformly broached tube support plates promote uniform shell-side flow.

Flow-Induced Vibration - Flow-induced vibration caused by shell-side cross flow or very high parallel flow can potentially cause tube failures. The design objective, considering flow-induced vibration, is to maintain excitation frequencies below tube natural frequencies. Flow-induced vibration is prevented by (1) limiting shell-side velocities, (2) providing adequate tube support, and (3) controlling salt inlet impingement velocities. With respect to the first point, excessive conservatism is not desirable since efficient heat transfer (and thus component performance) is highly dependent on high shell-side salt velocity. With respect to the second point, tube support plates are spaced at appropriate spans to limit tube natural frequencies. And finally, with respect to the third point, salt inlet distribution baffles control impingement velocities.

2.3.4.5 Structural Design

All components were structurally designed in accordance with ASME Section VIII, Division 1 (Reference 44). Mechanical stress analyses were performed to meet code requirements and to assure structural adequacy at critical locations in the vessels. Pressure boundary code calculations were made for all components, and wall thicknesses were established to meet minimum code requirements.

2.3.4.6 Inspection and Maintenance

Inspection of the superheater, evaporator, and IHX components can be accomplished from ground level and from platforms strategically placed at the upper leg of the U-shape. Handhole connections are provided for visual inspection of the insides of the primary coolant side as required.

These handholes have been placed at the most vulnerable areas of the components. A platform is provided around the steam drum to facilitate maintenance. Platforms and ladders are located at positions of valves and other control components to facilitate adjustments, inspection, and maintenance.

2.3.4.7 Heat Tracing

Electrical heat tracing in the steam generator is designed to preheat components above the salt melting point prior to loading salt and to maintain component temperatures during standby conditions. The trace heaters are deenergized during plant operation. Alarms are included to indicate system malfunction.

2.3.4.8 Structural Supports and Foundations

The design of the steam generator included foundations and support structures for the following items:

1) IHX;
2) Evaporator;
3) Superheater;
4) Steam Drum;
5) Salt and Water/Steam Piping.

The IHX, evaporator, superheater, and steam drum are supported on a common reinforced-concrete slab. A structural steel braced frame, located at one end of the slab, supports the steam drum at the appropriate elevation and serves as a fixed support for subsystem piping. A caged ladder provides access to the drum level. The superheater and evaporator are supported on saddles, which in turn are supported on the concrete slab. Lubricating pads are provided to allow for thermal expansion of the heat exchangers. The lower legs of the superheater, evaporator, and IHX are supported on pedestals; the upper section legs are supported by steel hanger rods, which in turn, are supported on structural steel frames.

2.3.5 Fossil Fired Salt Heater

A conceptual design for a 35 MW_t (119.3 x 10^6 Btu/hr) off-gas fired carbonate salt heater has been developed. This component is intended for to complement the operation of the solar central receiver to provide 24 hour-a-day plant operation. The effort has included parametric evaluation of alternate design characteristics, selection of the preferred heater configuration, and completion of appropriate performance analyses and equipment drawings.

2.3.5.1 Heater Requirements

To evaluate and select an appropriate heater design, several criteria were considered:

- efficient in the 35 MW_t range
- house sufficient tube passes to heat 41.7 kg/sec (331,000 lbm/hr) of salt
- capable of a large salt temperature rise in a high temperature range
- once through, continuous operation to supply salt to the chemical reaction furnaces

2.3.5.2 Furnace Description

The salt heater resembles a small B&W "El Paso-type" boiler arranged for once-through operation. "El Paso" is a name for a family of boilers with a specific heating arrangement that B&W developed. The configuration of the furnace enclosure and convection surface is shown in Figure 2-42. The arrangement of auxiliary equipment, such as the regenerative air heater and fans, is shown in Figure 2-43.

Combustion air is delivered by the forced draft fan to the air heater and distributed to the burner windbox. Combustion air and fuel are ignited in the burners in the lower part of the furnace section. The hot flue gas from the furnace is cooled as it crosses, in turn, the high-temperature and low-temperature convection surfaces. The flue gas is further cooled in the air heater before it is finally discharged from the induced draft fan to the stack.

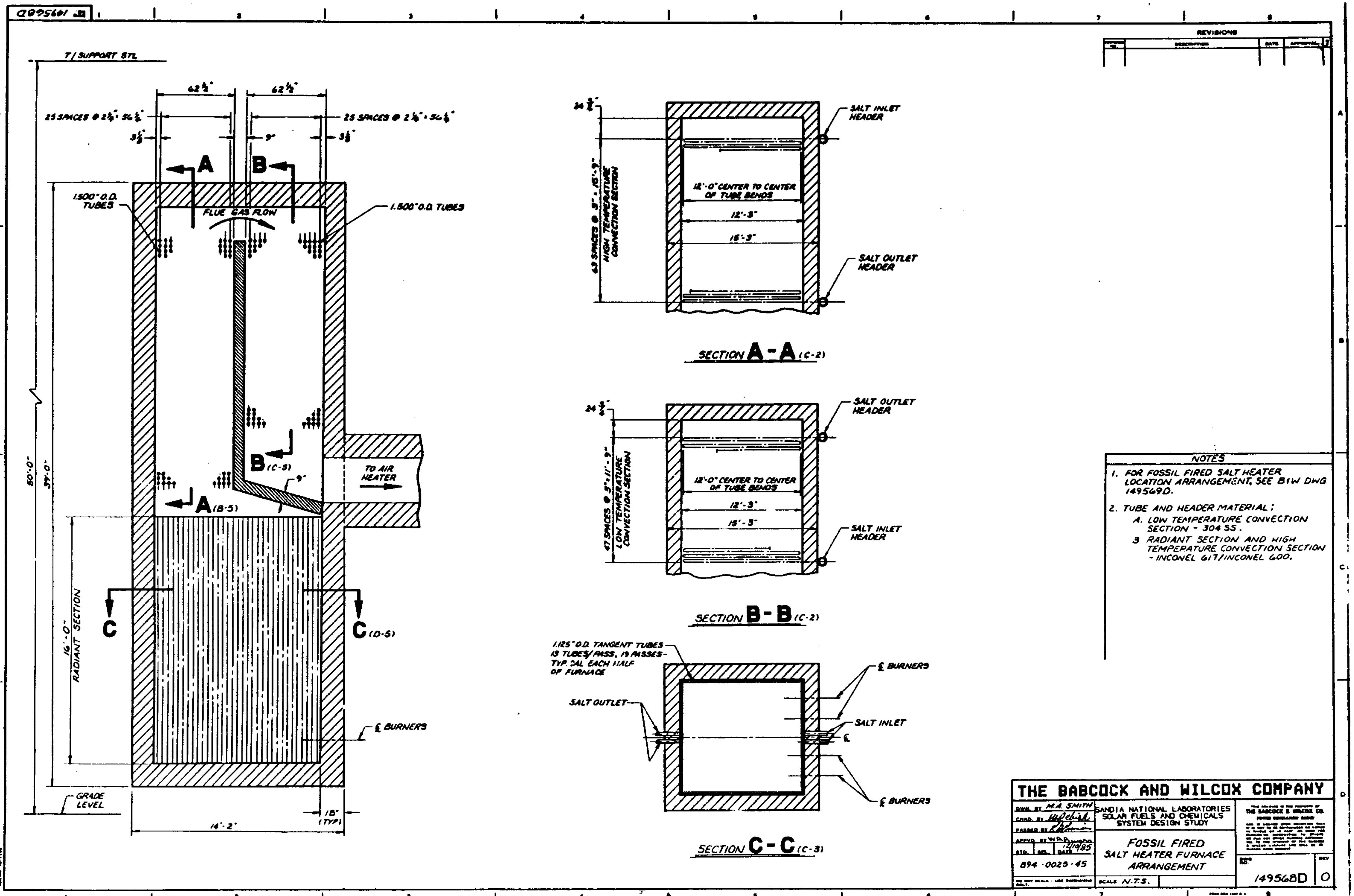

NOTES

1. FOR FOSSIL FIRED SALT HEATER LOCATION ARRANGEMENT, SEE B&W DWG 149569D.
2. TUBE AND HEADER MATERIAL:
   A. LOW TEMPERATURE CONVECTION SECTION - 304 SS.
   B. RADIANT SECTION AND HIGH TEMPERATURE CONVECTION SECTION - INCONEL 617/INCONEL 600.

Figure 2-42

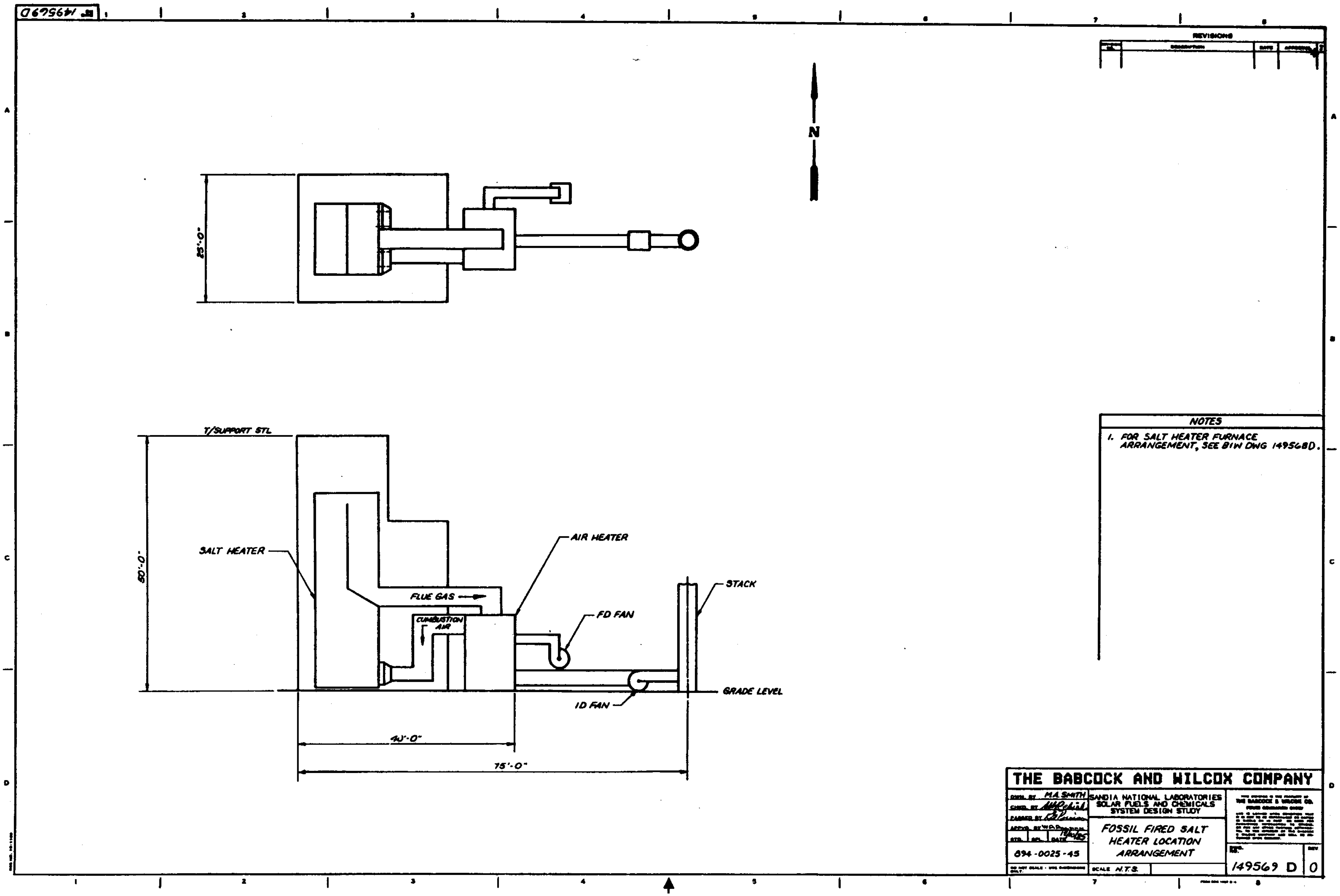
149569D
REVISIONS
N
25'-0"
T/SUPPORT STL
SALT HEATER
AIR HEATER
FLUE GAS
COMBUSTION AIR
FD FAN
STACK
ID FAN
GRADE LEVEL
80'-0"
40'-0"
75'-0"
NOTES
1. FOR SALT HEATER FURNACE ARRANGEMENT, SEE B&W DWG 149568D.
THE BABCOCK AND WILCOX COMPANY
DWN. BY M.A. SMITH
SANDIA NATIONAL LABORATORIES
SOLAR FUELS AND CHEMICALS
SYSTEM DESIGN STUDY
FOSSIL FIRED SALT
HEATER LOCATION
ARRANGEMENT
894-0025-45
SCALE N.T.S.
149569 D
0

Figure 2-43

The carbonate salt is heated as it passes sequentially through the low-temperature convective tubing, tangent tube furnace walls, and high temperature convective tubing. As the salt exits each heat transfer section, it is collected in a header and transported through interconnecting piping to the next section.

The furnace and associated combustion equipment are designed (a) to promote complete combustion of the fuel before it leaves the furnace, and (b) to promote efficient heat transfer within the allowable flux limitations established by the tubing material. The design criteria are based on many years of experience with boilers burning a wide range of fuels. Table 2-36 lists the design and sizing specifications for each section of the salt heater.

The burners are situated in one wall of the furnace and are encased in insulating refractory brick. The burners are located at the bottom of the wall to dissipate the heat throughout the combustion cavity.

The salt heater is top-supported using a structured steel network of vertical and horizontal trusses, bracing, and support members. The headers and interconnecting piping are heat traced for preheating them above the salt freezing point and for maintaining temperatures at approximately the cold salt temperature during standby.

Radiant Section - The radiant section consists of tangent tubes lining each of the four vertical walls within the combustion cavity. The salt experiences its greatest temperature rise 262°C (470°F) in this section. Behind the tangent tubes is insulating refractory brick which renders the front side of the tube as the only effective heat receiving surface. Due to the furnace temperatures and high radiant heat transfer, the coextruded Inconel 617/Inconel 600 tubing chosen to contain the molten salt for the receiver was also used in this section of the salt heater. The flux limitations established for the receiver design were upheld in the radiant furnace section. The salt velocity is sufficient to maintain an appropriate level of turbulent flow to insure acceptable tube temperatures.

Inlet salt to the radiant section flows from the low temperature convective section. The molten salt is divided in two streams and enters the radiant section through headers on the burner wall. Each stream flows through 13 parallel tubes in a vertical serpentine path of alternating upflow and downflow passes as it works its way across the furnace surface. The streams rejoin at an exit header on the wall opposite the burner wall prior to being piped to the high temperature convective section.

High Temperature Convective Section - The high temperature convective section consists of 26 parallel tubes; salt flow enters through a header at the top of the heater. The salt travels in the serpentine tubes against the flue gas flow. Through the high convective section, the salt is increased 88°C (160°F) in temperature to reach the exit temperature of 954°C (1750°F). The salt makes its last pass in this section at the top end of the furnace combustion cavity before exiting to the piping which transports it to the hot storage tank.

Low Temperature Convective Section - The low temperature convective section is similar to the high temperature convective section in respect to tube sizing and layout. The salt enters this section from the cold salt tank and begins its flow just above the flue gas exit duct where it progresses in the serpentine tubes against the flue gas flow to the top of the furnace. At the top of the furnace, the salt is collected in a header and transferred through a downcomer to the radiant furnace section. The salt is heated 90°C (163°F) in this section.

2.3.5.3 Performance Characteristics

The furnace is arranged to maintain a high level efficiency. The high percentage of hydrogen in the off-gas lowers the efficiency rating slightly. Because the off-gas contains a low level of sulfur and other pollutants, no scrubbing is required prior to discharging the flue gas to the atmosphere. Specific performance characteristics are as follows:

Input rating	42.1 MW_t (143.7 x 10^6 Btu/hr)
Furnace efficiency	83%
Output rating	35.0 MW_t (119.3 x 10^6 Btu/hr)
Salt side pressure drop	0.67 MPa (97 psi)
Salt flow rate	41.7 kg/sec (331,030 lbm/hr)
Salt temperature range	514°C-954°C (957°F-1750°F)
Flue gas flow rate	15.2 kg/sec (1.21 x 10^5 lbm/hr)
Flue gas exit temperature	177°C (350°F)

TABLE 2-36

Salt Heater Design and Sizing Specifications

High Temperature Convective Section

- Salt temperature rise	866-954°C (1590 - 1750°F)
- Surface area	725 m^2 (7801 Ft^2)
- Tube OD	38 mm (1.5")
- Tube length	3.7 m (12 Ft)
- Passes	64; 26 tubes/pass
- Side spacing	57 mm (2.25")
- Row Spacing	76 mm (3.00")
- Tube material	Coextruded Inconel 617/600

Medium Temperature Radiative Section

- Salt temperature rise	604-866°C (1120 - 1590°F)
- Surface area	50 m^2 (539 Ft^2)
- Tube OD	29 mm (1.125")
- Tube length	4.9 m (16 Ft)
- Passes, each half of section	14; 13 tubes/pass
- Tube arrangement	Tangent tube
- Tube material	Coextruded Inconel 617/600

Low Temperature Convective

- Salt temperature rise	514-604°C (957 - 1120°F)
- Surface area	548 m^2 (5900 Ft^2)
- Tube OD	38 mm (1.5")
- Tube length	3.7 m (12 Ft)
- Passes	48; 26 tubes/pass
- Side spacing	57 mm (2.25")
- Row spacing	76 mm (3.00")
- Tube material	304 SS

2.3.6 Salt Pumps and Interconnecting Piping

Salt from the cold carbonate salt storage tank flows into a sump tank. Two full capacity, vertical cantilever-type pumps are mounted on the sump tank. Vertical cantilever pumps are used throughout the molten salt system to alleviate pump seal problems associated with the high system temperatures. Two pumps provide full back-up pumping capability. Each pump is equipped with a two-speed motor. For receiver operation, the pump is operated at high speed to provide the power required to pump carbonate salt through the receiver to the receiver hot surge tank. For fossil fired salt heater operation the pump is operated at the lower speed to pump salt through the salt heater to the hot carbonate salt storage tank and to pump salt through the receiver overnight recirculation system. During both modes of pump operation cold salt is also supplied to the chemical process subsystem and upstream of the intermediate heat exchanger for salt temperature control. Cold salt piping is fabricated from 304 stainless steel.

Depending on the operating mode, hot carbonate salt flows either from the receiver hot surge tank or from the fossil fired salt heater outlet to the hot carbonate salt storage tank. Hot salt from this storage tank flows into a sump tank. Two full capacity, vertical cantilever-type pumps are mounted in the sump tank. Carbonate salt is pumped through the chemical process subsystem and the intermediate heat exchanger and returns to the cold carbonate salt storage tank. Piping material for hot carbonate salt service is co-extruded Inconel 600 and Inconel 617, which provides the required combination of corrosion resistance and strength. The choice of piping material at locations between the hot carbonate salt pump and the cold carbonate storage tank is dependent on system temperature and pressure at a particular location.

For initial charging of the carbonate salt system or for salt makeup, an initial charging tank with a electrical heater is provided. The heater initially melts the salt and a vertical cantilever-type pump transports the salt into the cold storage tank. The initial charging tank also serves as temporary storage for salt drained from the piping during scheduled, or other necessary, system shutdowns.

A separate salt recirculation system is installed to provide cooling for the hot carbonate salt storage tank pressure boundary using carbonate salt from the cold salt storage tank. This system is discussed in Section 2.3.3. Two full capacity, vertical cantilever-type pumps mounted on a sump tank are provided for this system.

Nitrate salt in the steam generator subsystem flows from a sump tank to the intermediate heat exchanger where it absorbs energy from the carbonate salt. The nitrate salt then flows through the superheater and evaporator to generate steam before returning to the sump tank. Two full capacity, vertical cantilever-type pumps are mounted on the sump tank to pump the nitrate salt through the flow path described above and to provide salt for temperature control of nitrate salt entering the evaporator. The choice of piping material for nitrate salt containment is made on the basis of the material's corrosion resistance to the salt as a function of temperature:

Temperature	Material
Up to 400°C (750°F)	Low carbon steel
400°C - 455°C (750°F-850°F)	2 1/4 Cr - 1 Mo
Over 455°C (850°F)	304 Stainless Steel

Provision is made to electrically heat trace all salt piping in the system. Heat tracing permits preheating of the piping above the salt freezing point prior to loading salt to prevent thermal shock and freezing of salt in the pipes.

2.4 Tower and Collector Field Subsystem

The heliostat field is typically the most significant cost driver of central receiver systems. Cost effective design of the heliostat field is closely linked to the receiver configuration and receiver operating characteristics. The objective of the conceptual design effort reported here is to develop a heliostat field/receiver interface which minimizes the contribution of the heliostat field and receiver tower to the overall system cost of energy. The scope of effort includes the following:

- o heliostat field layout and size
- o receiver interface definition
  - -- receiver elevation
  - -- aperture size
  - -- aperture orientation
  - -- solar flux incident on receiver surfaces
- o solar-to-thermal performance
  - -- design point and annual efficiency
  - -- design point and representative off-design-point direct incident flux maps

A summary of the solar subsystem conceptual design is presented in Table 2-37. The remainder of this section will present the design criteria and assumptions, the design approach, the design trade studies, and solar-to-thermal performance.

2.4.1 Design Approach

The solar subsystem (heliostat field size and layout, tower height, and aperture size) has been optimized using DELSOL2 (Reference 39), a FORTRAN computer code developed by SNLL. DELSOL2 calculates the optical performance and optimal system design for solar thermal central receiver plants. It computes instantaneous and annual system efficiencies for user-defined central receiver systems, stepping through a grid of parametric calculations to select the configuration having the lowest life cycle cost of energy. Recently, SNLL corrected deficiencies in DELSOL2 which had resulted in errors in the computation of fluxes within cavity receivers. Prior to the solar design for this project, Black & Veatch made the appropriate modifications to its version of DELSOL2 to assure proper computation of fluxes.

TABLE 2-37 HELIOSTAT FIELD AND RECEIVER INTERFACE DESIGN SUMMARY

Heliostat Field Design

Heliostat Reflective Area: 95.5 m^2
Number of Heliostats: 797
Heliostat Field Reflective Area: 76,100 m^2
Land Area: 401,000 m^2 (100 acres)
Configuration: North Field

Receiver Interface

Receiver Elevation (to aperture centerline): 90 m (295 ft)
Aperture Size: 7.6 m x 7.6 m (25 ft x 25 ft)
Aperture Tilt: vertical

Design Point Performance

Design Point: noon, December 21
Insolation: 950 W/m^2
Power to Field: 72.3 MWt
Power through Aperture: 53.6 MWt
Receiver Power Absorbed: 41.8 MWt
Solar-to-Thermal Efficiency: 57.8 percent

Annual Solar-to-Thermal Performance

Incident Insolation: 6.76 $kWh/m^2/day$
Energy Incident on Field: 188 GWh/year
Receiver Thermal Energy Absorbed: 88 GWh/year
Solar-to-Thermal Efficiency: 47.0 percent

2.4.1.1 Solar Design Approach

The goal of the solar design was to minimize the solar contribution to the cost of thermal energy delivered to the base of the receiver tower. Included in the DELSOL2 optimization were the capital costs of the heliostat field, land and site preparation, tower, and in-tower piping. Operations and maintenance costs of these elements were also included as a multiplier of the respective capital costs.

The approach taken in the solar subsystem design was to first find the optimum tower height/aperture size/heliostat field layout combination without considering flux constraints within the receiver cavity. Following the determination of this optimum configuration, design point flux maps were computed for the Babcock & Wilcox initial receiver configuration. Because computed fluxes exceeded the allowable values for this initial receiver design, fluxes for alternative configurations were also computed. Babcock & Wilcox chose the preferred receiver configuration following a comparison of computed and allowed fluxes.

The solar system design used the Sandia baseline glass/metal heliostats. Data for these heliostats were provided to Black & Veatch by SNLL. The heliostats have a gross area of 98.4 m^2 and a mirror area of 95.5 m^2 with an average reflectivity of 91 percent. A heliostat cost of $\$120/m^2$ was used in the optimization procedure; this cost assumes mass production of heliostats. Each heliostat consists of 16 mirror facets, each 1.22 m high by 4.88 m wide. Each facet has a focal length of 1250 m (4080 ft), equal to the distance from the farthest heliostat row to the receiver aperture. Facets are also canted to achieve an effective focal length of 640 m (2100 ft). Heliostat availability was assumed to be 100%; this is a slightly optimistic assumption in that a fraction of one percent of the heliostats may be out of service for maintenance at any given time.

Only square and rectangular apertures were considered. The aim point strategy for heliostats used the automatic aiming strategy of DELSOL2. This strategy spreads the aimpoints over the aperture area. A circular aperture would probably be more efficient than the square aperture because a smaller aperture area could probably be used; however, the automatic heliostat aim-point spreading option is not available with DELSOL2 for circular apertures. Furthermore, use of the smaller circular aperture would probably increase the peak direct incident flux within the cavity. Furthermore, the circular aperture would be more costly to construct. If any, the reduction in the cost of energy gained by the use of a circular aperture would be small.

2.4.1.2 Results of the Solar Subsystem Design

The following subsections will present the results of the solar subsystem optimization and the solar flux calculations.

Solar Subsystem Optimization

Optimization runs were made using DELSOL2 to determine the optimimum tower height and aperture size for a vertical aperture. Figure 2-44 shows (a) the relative contribution of solar to the cost of energy versus tower height and (b) the relative contribution of solar to the cost of energy versus aperture area (square aperture).

Figure 2-44a indicates that, for a vertical aperture, the optimum system has a tower height of 90 m (295 ft) for all but very small aperture sizes. Therefore, a tower height of 90 m (295 ft) was selected. The DELSOL definition of tower height is the distance between the horizontal plane of the pivot of the heliostat and the plane of the center of the aperture. The optimum aperture size, as indicated by Figure 2-44b, is 7.6 m by 7.6 m (25 ft by 25 ft).

Figure 2-45 shows the effect of tilting the aperture for a 90 m tower height and for 3 aperture sizes. Any increase in receiver cost required by the aperture tilt was not included in the evaluation. Likewise, this analysis did not consider any decrease in convective losses which might occur due to the downward tilt. Tilting the aperture from vertical to 20 degrees decreases the solar contribution to the cost of energy by about 2.7 percent. The number of heliostats required is also reduced by about this same percentage (about 22 heliostats). This is a cost savings of about $250,000 in 1985 dollars. If the tilt could be added for less than that amount, it would be cost-effective. The tilt would complicate the design of the receiver and the design and operation of an aperture door. Based on these data, the receiver designer selected a vertical aperture.

ANALYSIS OF TOWER HEIGHT*

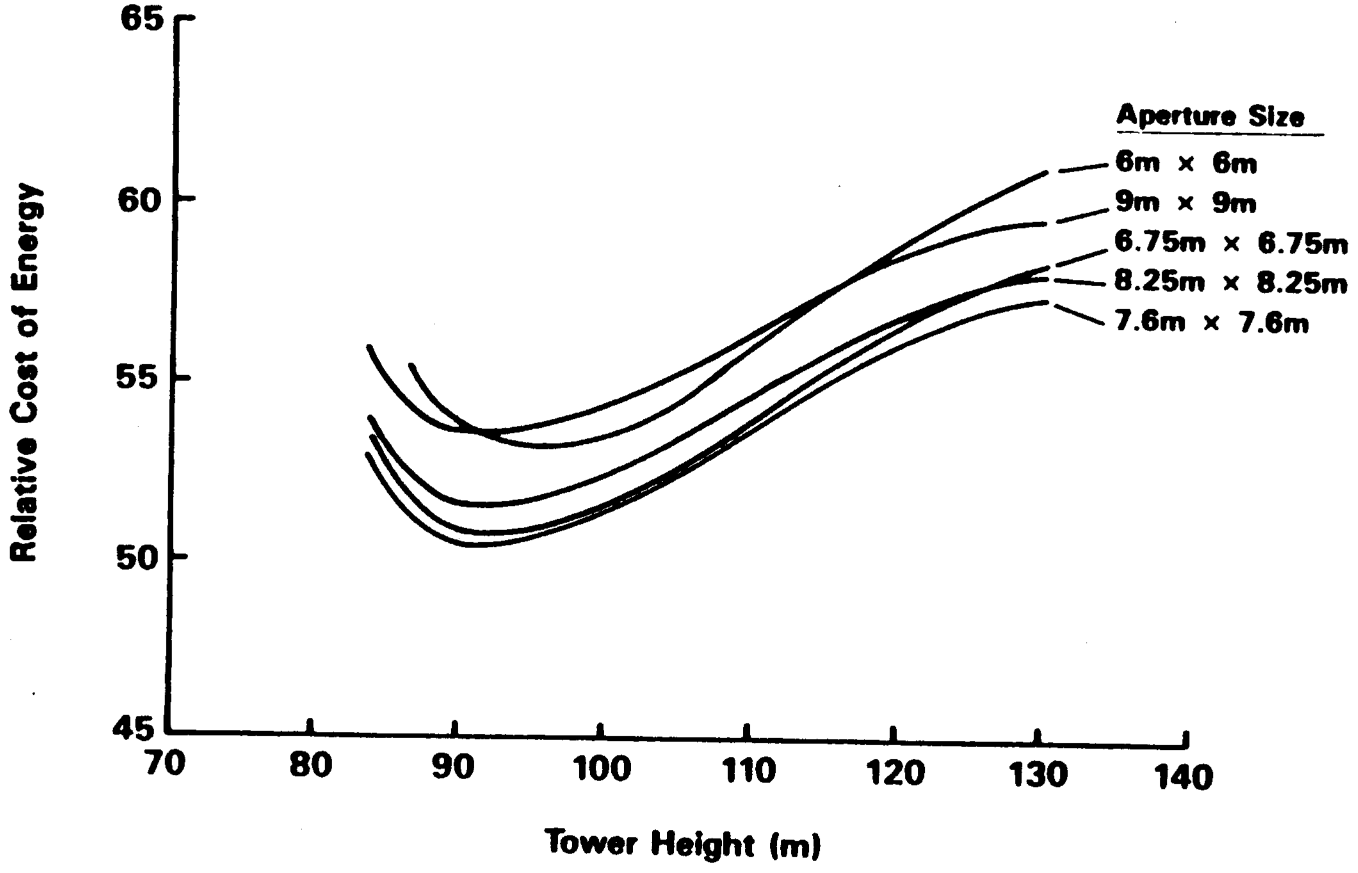

*Vertical Aperture. Tower Height Measured from Heliostat Pivot to Aperture Center

Black & Veatch, Engineers-Architects
Kansas City

Figure 2-44a

APERTURE SIZE ANALYSIS*

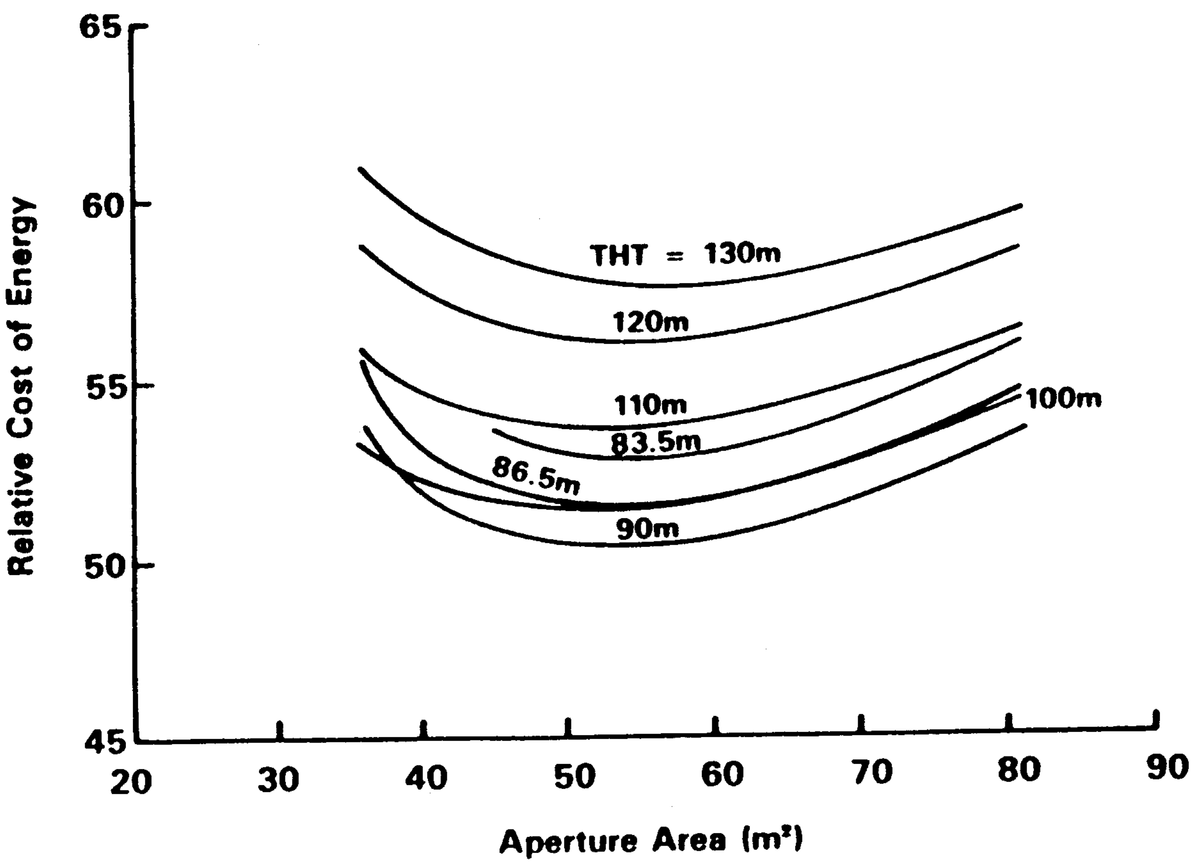

*Square, Vertical Aperture

Black & Veatch, Engineers-Architects
Kansas City

Figure 2-44b

Design Point Flux Maps

Design point direct incident flux calculations have been made for receiver heat exchanger surfaces, the ceiling, and aperture for a number of receiver configurations. The direct incident flux is that flux on the cavity surfaces which comes directly from the heliostat field. It does not include the background "cavity flux", which consists of reflected and reradiated flux within the cavity. The total incident flux is the sum of the direct incident flux and the cavity flux. Calculation of the cavity flux would require a detailed computer modeling of the interaction of the direct incident flux, heat exchanger surfaces, as well as passive surfaces within the cavity. These calculations were beyond the scope of this project. It is estimated that the cavity background flux is about 100 kW/m^2 (31,700 Btu/h ft^2).

Babcock & Wilcox calculated allowable flux limits on the heat exchanger surfaces. These flux limitations are related to allowable stresses within the heat exchanger tubes. The allowable flux level varies spatially within the cavity, requiring that fluxes computed with DELSOL2 be compared with allowable fluxes on a point-by-point basis in the cavity. Those comparisons are discussed in the receiver design section of this report. Discussion within this section will consider only the peak allowable flux, which is about 600 kW/m^2 (190,000 Btu/h ft^2). If the cavity background flux is taken to be about 100 kW/m^2 (31,700 Btu/h ft^2), the peak allowable direct incident flux would be about 500 kW/m^2 (158,000 Btu/h ft^2).

Table 2-38 shows the direct incident flux at the design point as calculated by DELSOL2 for the heat exchange surface of the initial receiver design developed by Babcock & Wilcox. The heat exchange surface is a 7.7 m (25.1 ft) radius semi-cylinder. The height given in the table is in reference to the bottom of the heat exhange surface. The bottom of the heat exchange surface is 2.43 m (8 ft) above the cavity floor. The azimuth angle shown in Table 2-38 is 180 degrees at the back of the cavity, and 270 degrees at the west side of the cylinder. The center of the semi-cylinder for the initial receiver design is 1.22 m (4.0 ft) south of the aperture plane. Fluxes on the east side of the cavity are symmetric with those on the west side because of the solar noon design point.

APERTURE TILT ANALYSIS*

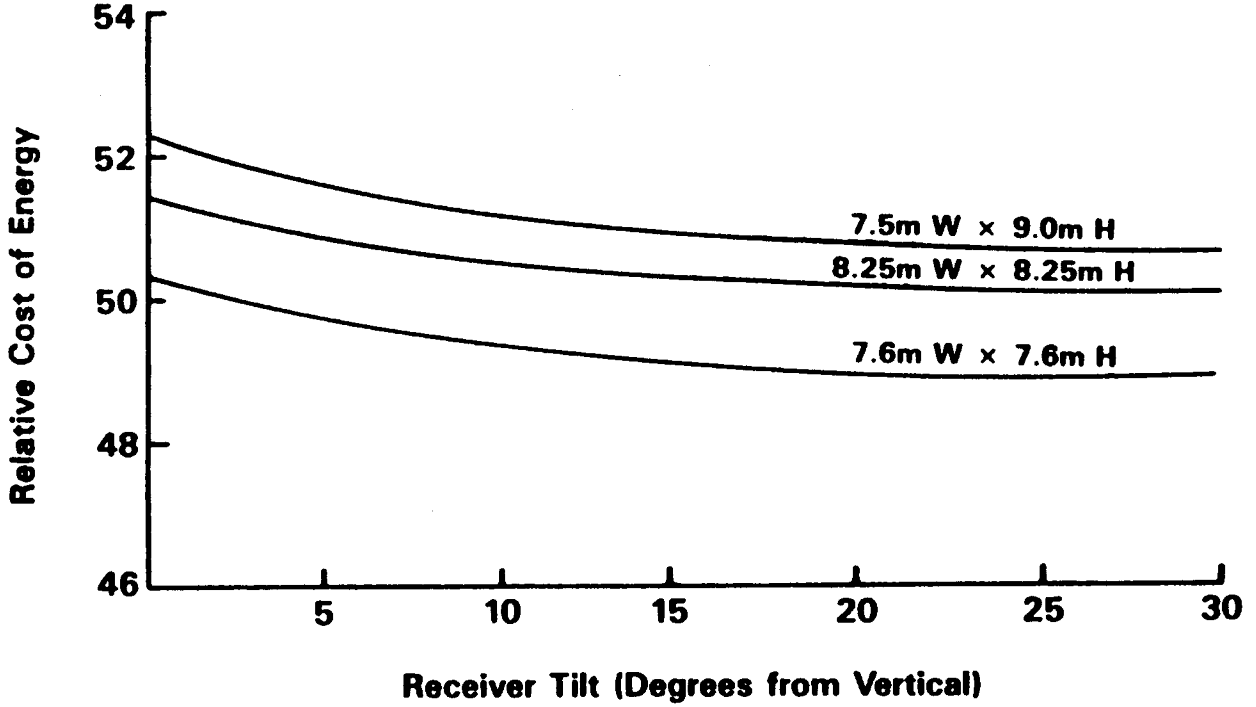

*90m Tower Height. Analysis Does Not Include Cost of Adding Aperture Tilt to Receiver Cost

Black & Veatch, Engineers-Architects
Kansas City

Figure 2-45

DESIGN POINT HEAT EXCHANGER SURFACE FLUX MAP*

	Azimuth (180° = South)					
Height (m)	180	195	210	225	240	255
9.85	34	35	30	23	16	3
8.76	60	61	50	40	32	6
7.66	100	100	86	78	64	19
6.57	178	174	158	146	125	39
5.47	355	351	326	305	256	76
4.38	574	575	541	501	414	112
3.28	650	661	629	589	480	126
2.19	502	512	492	476	395	104
1.09	236	240	237	238	204	56
0.00	59	60	61	61	54	16

* Direct Incident Flux kW/m². Surface is 7.7m Radius, Centered 1.2 m South of Aperture Plane

Table 2-38

The peak direct incident flux for the initial receiver design is 661 kW/m^2 (210,000 Btu/h ft^2) at a height of 3.28 m (11.8 ft) and at 195 degrees. This flux level is considerably above the peak allowed direct incident flux of 500 kW/m^2 (158,000 Btu/h ft^2). Fluxes are high across a wide portion of the cavity back in the 2.2 m (7.2 ft) to 4.4 m (14.4 ft) height range.

Because fluxes in the initial receiver configuration were significantly higher than those allowed, a number of changes were made to the design to spread, and thereby reduce, the flux. Peak fluxes can be reduced in several ways:

- Relocate and/or re-aim heliostats
- Increase aperture size (decreasing solar-to-thermal efficiency and increasing the cost of energy)
- Increasing the cavity depth (front to back) with associated increases in cavity cost

Relocating and re-aiming heliostats to change flux patterns using DELSOL2 is an extremely time consuming task because the location and aim point of each heliostat must be entered individually if the automatic selection capabilities of the code are bypassed. Such an effort, which would be trial and error to some extent, is beyond the scope of this project. Furthermore, relocation of heliostats would result in lower solar-to-thermal field efficiency since the field design is essentially optimized. Therefore, this method of changing flux patterns has not been used. It is a potential area for further study.

The two remaining alternatives, spreading flux by increasing aperture area and by increasing cavity depth, were evaluated. Table 2-39 summarized the peak direct incident fluxes calculated for a number of receiver configurations.

Spreading of fluxes on the back wall of the cavity by increasing aperture size alone does not appear to be a particularly effective means. The increase in aperture size from 7.6 m (25 ft) square to 10 m (32.8 ft) square does not result in sufficiently reduced fluxes, and decreases overall annual solar to thermal efficiency significantly (from 47.2 percent to 40.3 percent). This results in a need for an additional 92 heliostats to provide the 41.8 MWt of absorbed power at the design point. The effective capitalized cost increase over the baseline design case is estimated to be $1,300,000.

Table 2-39

Summary of Peak Direct Incident Fluxes for Various Receiver Configurations

Aperture Size[a]	Receiver Configuration[b]	Peak Flux on the Heat Exchanger Surface[c]	Comments
7.6 m by 7.6 m	B&W initial	661 kW/m2	Reference case. Optimum from a field design standpoint, but above allowable flux
7.6 m by 7.6 m (20 degree tilt)	B&W initial except 20 degree tilt	Not calculated	Gives 2.7 percent increase in annual energy. Capitalized savings is about $250,000.
9.0 m by 9.0 m	B&W initial	604 kW/m2	Capitalized cost of decreased solar-to-thermal efficiency estimated to be $588,000.
10.0 m by 10.0 m	B&W initial	552 kW/m2	Capitalized cost of decreased solar-to-thermal efficiency estimated to be $1,300,000.
7.6 m by 7.6 m	9.3 m radius, 1.22 m south	537 kW/m2	Field capitalized cost same as reference. Receiver cost would be increased.
7.6 m by 7.6 m	10.8 m radius, 1.22 m south	466 kW/m2	Field capitalized cost same as reference. Receiver cost would be increased.
7.6 m by 7.6 m	7.7 m radius, 2.72 m south	537 kW/m2	Field capitalized cost same as reference. Receiver cost would be increased.
7.6 m by 7.6 m	9.3 m radius, 2.72 m south	466 kW/m2	Field capitalized cost same as reference. Receiver cost would be increased.
7.6 m by 7.6 m	7.7 m radius, 3.32 m south	503 kW/m2	Field capitalized cost same as reference. Receiver cost would be increased.
7.6 m by 7.6 m	9.3 m radius, 3.92 m south	480 kW/m2	Field capitalized cost same as reference. Receiver cost would be increased.

---

[a] Vertical aperture unless noted.
[b] B&W initial design has a 7.7 m (25.1 ft) cavity radius, with the center 1.22 m (4.0 ft) south of the aperture plane.
[c] Direct incident flux. Allowable is 493 kW/m^2.

Two schemes were used to increase cavity depth (the distance from the aperture plane to the cavity back wall). First, the cavity cylinder radius was increased without shifting the location of the the center of the cylinder. Second, the cavity radius was maintained at 7.66 m (25.1 ft), and the center of the cylinder moved further away from the aperture plane. These cases use the 7.6 m by 7.6 m (25 ft by 25 ft) aperture, and therefore retain the "optimum" field configuration. Any change in the capitalized system cost would be associated with increases in receiver cost due to the adjusted receiver configuration.

Table 2-40 lists the direct incident fluxes for the receiver configuration selected for the final design. A receiver radius of 7.66 m (25.1 ft) was retained, with the center of the semi-cylinder shifted to 3.3 m (10.8 ft) south of the aperture plane. The peak direct incident flux is 503 kW/m^2 (159,000 Btu/h ft^2), which is essentially the same as the peak allowable direct incident flux.

Figure 2-46 is a map of the direct incident flux on the ceiling plane (12.3 m [40 ft] above the floor, 9.85 m [32 ft] above the bottom of the heat exchanger surface). This flux map is valid for any receiver configuration with the 7.6 m (25 ft) square vertical aperture and the "optimum" field design. The outline of the initial receiver configuration is shown in dashed lines and the final receiver configuration is shown in solid lines on the figure. It should be noted that there is a possible discrepancy between the ceiling and wall fluxes as predicted by DELSOL2. Comparison of two very closely spaced points in the cavity, one on the wall and one on the ceiling, indicates questionably different flux values (see Table 2-40 and Figure 2-46). Considering the direction of the incident radiation, it is difficult to ascribe the difference in flux levels to cosine effects alone.

The aperture fluxes for the right side of the aperture are listed in Table 2-41. The peak spillage flux is about 358 kW/m^2 (113,000 Btu/h ft^2). This flux map is for the flux at an infinitesimal distance inside the aperture, and therefore extends only to the boundaries of the aperture. To extend the plane of the flux map is extremely difficult with the current version of DELSOL2.

DESIGN POINT HEAT EXCHANGER SURFACE FLUX MAP*

Height (m)	Azimuth (180° = South) 180	195	210	225	240	255	270
9.85	45	45	41	33	24	14	2
8.76	69	63	66	52	42	28	8
7.66	107	100	96	84	74	55	15
6.57	205	192	184	163	142	109	30
5.47	371	352	340	311	275	219	59
4.38	503	492	479	454	416	335	91
3.28	492	482	475	468	440	365	102
2.19	312	310	315	325	321	284	83
1.09	122	123	128	136	143	136	43
0.00	27	27	29	31	34	35	12

* Direct Incident Flux kW/m². Surface is 7.7 m Radius, Centered 3.3 m South of Aperture Plane

Table 2-40

CEILING FLUX MAP*

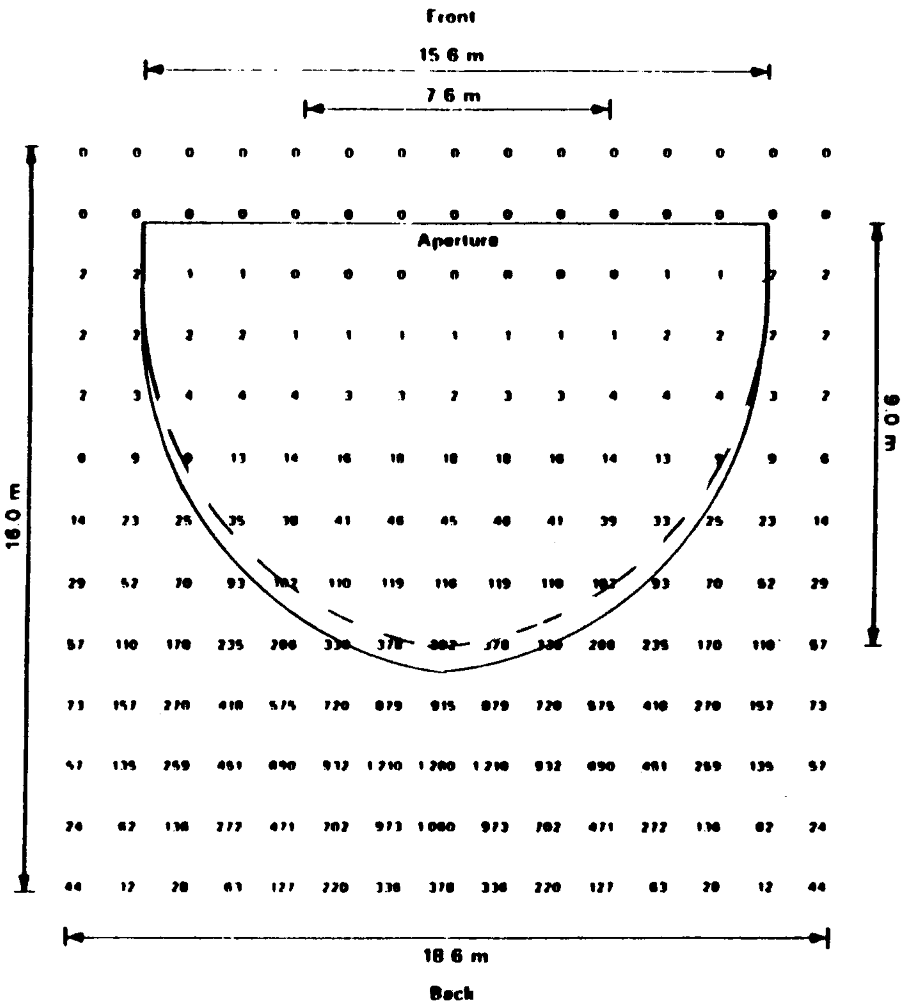

* kW/m² at 12.3 m (40 Ft) Above Cavity Floor

Black & Veatch, Engineers-Architects
Kansas City

Figure 2-46

TABLE 2-41

Design Point Aperture Flux (kW/m2)

Height Above Aperture Bottom		Horizontal Displacement West of Center line (m)					
		0	0.75	1.5	2.25	3.0	3.75
m	(ft)						
7.48	(24.54)	174	175	166	127	85	49
6.80	(22.31)	488	468	402	297	182	97
6.12	(20.08)	1,020	967	805	567	333	165
5.44	(17.85)	1,670	1,580	1,300	902	515	248
4.76	(15.62)	2,190	2,080	1,730	1,200	675	318
4.08	(13.39)	2,430	2,320	1,950	1,360	767	358
3.40	(12.99)	2,430	2,320	1,950	1,360	767	358
2.72	(8.92)	2,190	2,080	1,730	1,200	675	318
2.04	(6.69)	1,670	1,580	1,300	902	515	248
1.36	(4.46)	1,020	967	805	567	333	165
0.68	(2.23)	488	468	402	297	182	97
0.00	(0.00)	186	184	169	133	88	53

2.4.2 Tower

The solar receiver tower is indicated schematically on Black & Veatch Drawing S2100 (Figure 2-47) and is described in the following sections.

2.4.2.1 Design Criteria

The tower height is established to optimize solar receiver performance. The design addresses all applicable dead and live loading combinations including wind and seismic category IV loads appropriate for the Barstow, California area conditions.

2.4.2.2 Description

The tower measures 85.34 meters (280 feet) from ground level to the receiver support elevation. It is a self-supported, braced structural steel frame, rectangular in cross section, with four principal columns. The tower tapers from 19.51 by 17.37 meters (64 by 57 feet) at the base to 10.36 by 8.23 meters (34 by 27 feet) at the receiver support elevation. Only the top portion of the structure is enclosed as noted below. Reinforced concrete footings support the tower columns.

The top 6.10 meters (20 feet) of the tower from the elevator platform to the receiver support elevation is enclosed with a light reflecting metal wall panel. This enclosure protects the tower structure from reflected sunlight while providing a weather enclosure for electrical and control equipment, a hoist, and the elevator machinery.

A small elevator, suitable for personnel and small equipment, provides access between the ground level and the elevator platform. A stairway continues up to the receiver. In an emergency, personnel can exit from the elevator platform to the ground via a caged vertical ladder. A hoist, suspended from a monorail below the receiver support elevation, lifts heavier equipment to the elevator platform.

2.4.3 Collector Field Design

Based on the receiver aperture and elevation characteristics described previously, a cost effective heliostat field was designed to achieve maximum annual performance. This analysis considered the interactive effects of heliostat shadowing and blocking, atmospheric attenuation and aperture spillage due to redirected image size.

The optimum heliostat field consists of 797 heliostats, providing a total reflective area of 76,100 m^2 (817,000 ft^2). As shown on Figure 2-48, the field extends radially from the receiver tower a minimum distance of 68 m (220 ft) to a maximum distance of 630 m (2,070 ft), and azimuthally from 31.1 degrees north of west to 31.1 degrees north of east. The heliostat density varies with location in the field from ground cover ratios of 44 percent near the tower to 12 percent for those heliostats most distant from the tower. The ground cover ratio is the ratio of mirror area to land area. The average ground cover ratio is 19 percent.

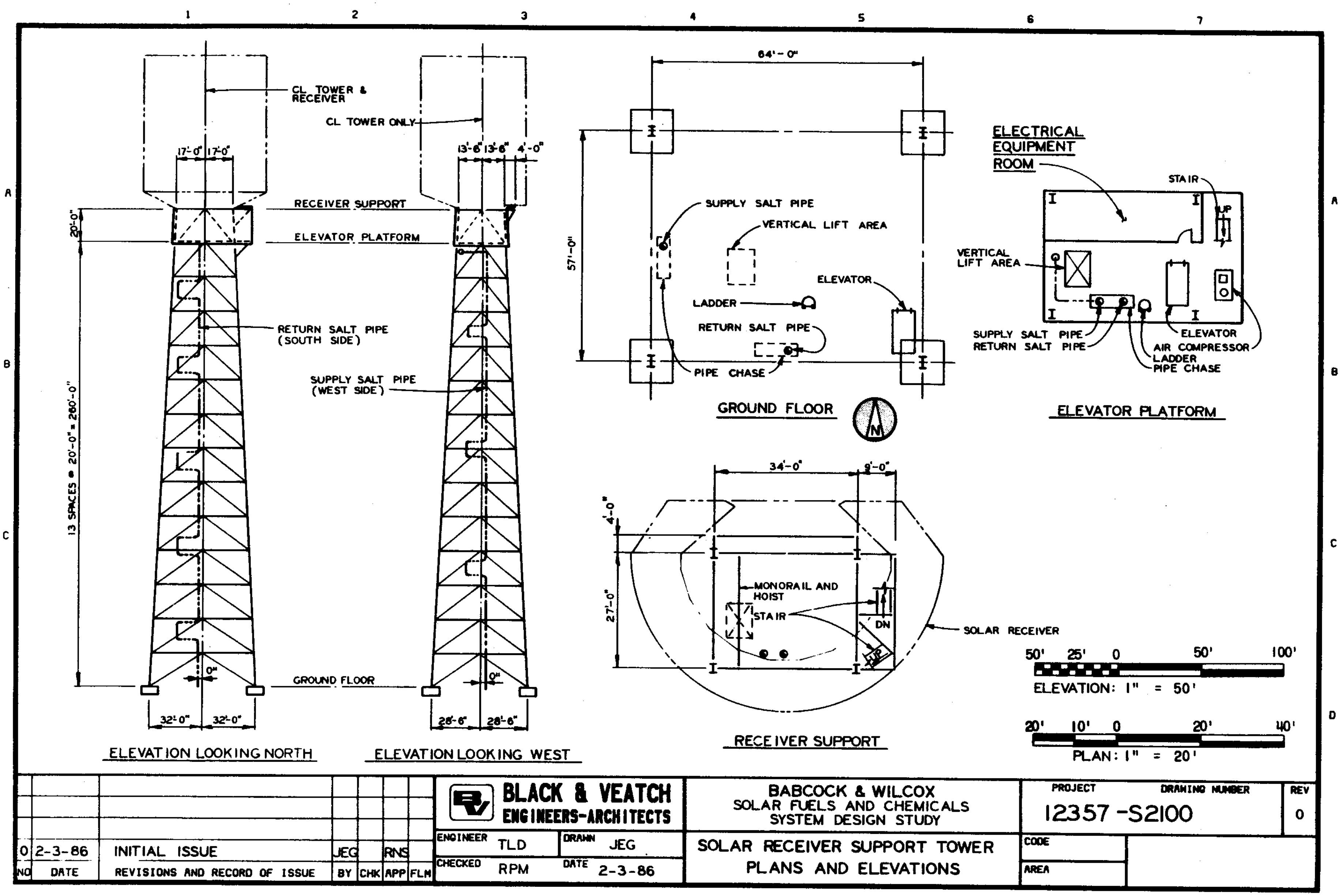
1
2
3
4
5
6
7
A
B
C
D
CL TOWER & RECEIVER
CL TOWER ONLY
17'-0"
17'-0"
13'-6"
13'-6"
4'-0"
RECEIVER SUPPORT
ELEVATOR PLATFORM
20'-0"
13 SPACES @ 20'-0" = 260'-0"
RETURN SALT PIPE (SOUTH SIDE)
SUPPLY SALT PIPE (WEST SIDE)
GROUND FLOOR
0"
32'-0"
32'-0"
28'-6"
28'-6"
ELEVATION LOOKING NORTH
ELEVATION LOOKING WEST
64'-0"
57'-0"
SUPPLY SALT PIPE
VERTICAL LIFT AREA
ELEVATOR
LADDER
RETURN SALT PIPE
PIPE CHASE
GROUND FLOOR
N
ELECTRICAL EQUIPMENT ROOM
STAIR
UP
VERTICAL LIFT AREA
SUPPLY SALT PIPE
RETURN SALT PIPE
ELEVATOR
AIR COMPRESSOR
LADDER
PIPE CHASE
ELEVATOR PLATFORM
34'-0"
9'-0"
4'-0"
27'-0"
MONORAIL AND HOIST
STAIR
DN
UP
SOLAR RECEIVER
RECEIVER SUPPORT
50'
25'
0
50'
100'
ELEVATION: 1" = 50'
20'
10'
0
20'
40'
PLAN: 1" = 20'
0
2-3-86
INITIAL ISSUE
JEG
RNS
NO
DATE
REVISIONS AND RECORD OF ISSUE
BY
CHK
APP
FLM
BLACK & VEATCH
ENGINEERS-ARCHITECTS
ENGINEER TLD
DRAWN JEG
CHECKED RPM
DATE 2-3-86
BABCOCK & WILCOX
SOLAR FUELS AND CHEMICALS
SYSTEM DESIGN STUDY
SOLAR RECEIVER SUPPORT TOWER
PLANS AND ELEVATIONS
PROJECT
DRAWING NUMBER
12357 -S2100
REV
0
CODE
AREA

Figure 2-47

COLLECTOR FIELD AND TOWER LAYOUT

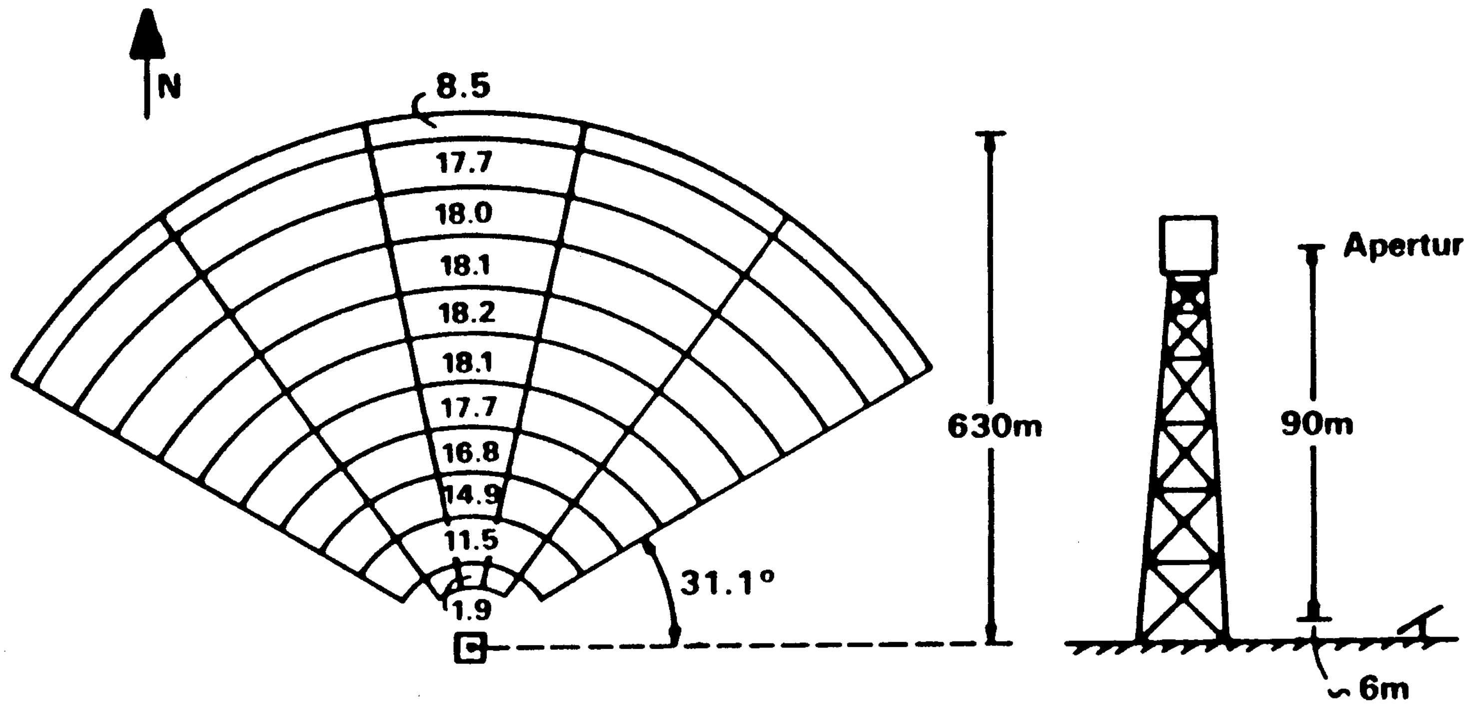

Number of Heliostats:	797
Mirror Area:	76,100 m²
Land Area:	401,000 m²

Black & Veatch, Engineers-Architects
Kansas City

Figure 2-48

2.4.4 Subsystem Performance

The solar-to-thermal performance of the solar thermal activated carbon production system was computed using DELSOL2. Data on both design point and annual average system efficiencies are provided in this section.

Figure 2-49a shows the design point solar-to-thermal efficiency stairstep. The overall design point solar-to-thermal efficiency is 57.8 percent. The annual average solar-to-thermal efficiency chain is presented in Figure 2-49b. The annual solar-to-thermal efficiency is 47 percent. The annual energy production is 88 GWh (3.0 x 10^{11}Btu), based on an annual average direct normal insolation of 6.76 kWh/m^2/day at Barstow. The annual energy production of 88 GWh is an optimistic number because daily startup penalties, overnight thermal losses, etc. have not been included in the calculations.

2.5 Balance of Plant

2.5.1 Coal Handling System

The Coal Handling System is shown schematically on Black & Veatch Drawings M1000 and S3000 (Figures 2-50 and 2-51).

Coal arrives by rail at the Coal Unloading Building located in the southeast corner of the plant site. The cars enter the building at grade level and unload one by one, each car dumping through the tracks into a hopper below. Four belt feeders beneath the hopper convey coal to the receiving end of the elevating conveyor.

The Coal Handling System will unload coal at the rate of four 90-metric ton (100 US ton) bottom dump hopper cars in one hour. Coal is immediately weighed and transported to the coal storage silos. Conveyors have a maximum 14 degree angle of inclination.

EFFICIENCY STAIRSTEPS

Design Point Efficiency Stairstep

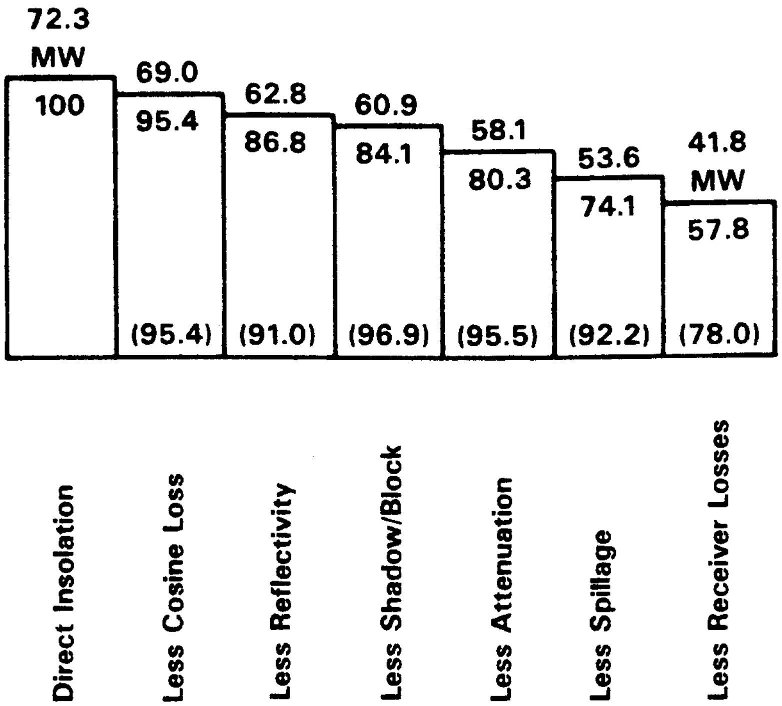

Figure 2-49a

Annual Average Efficiency Stairstep

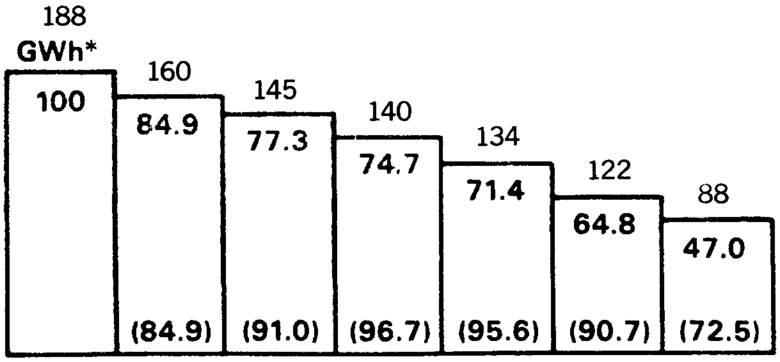

Figure 2-49b

*Based on Annual Insolation of 2469 kWh/m²/Year for Barstow, CA.

Figure 2-49

The Coal Handling System is designed for manual control under the direct supervision of operating personnel. Appropriate limit switches and safety devices shut off the coal flow in the event of equipment failure, fire, or other emergency conditions. Dust control and fire protection throughout the system are primary design considerations. Passive dust control includes enclosure of all coal handling equipment and plant areas where coal is being handled. These same areas have active dust control by the use of dust suppression or collection systems. Automatic sprinkler systems provide fire protection.

The primary design criteria for the coal handling system are:

- Provide coal at a rate necessary to meet process requirements.
- Locate the system to minimize fugitive particle spread to the solar collector field.
- Withstand local wind and seismic conditions.
- Provide fire protection.
- Manual control with automatic safety protection.

2.5.1.1 Coal Unloading Building

The Coal Unloading Building encloses all coal unloading operations. It is located in a direction and at considerable distance from the solar collector field to minimize heliostat dusting. The building is designed for all applicable dead and live loadings, including the effects of wind and seismic events. The single story building measures approximately 22 by 36 meters (72 by 118 feet). It covers a concrete pit foundation approximately 12 meters (39 feet) deep. The car dump hopper, belt feeders, and elevating conveyor receiving end are located within the pit. A wet dust suppression system flushes coal dust to a sump in the bottom of the pit. Stairs and a suspended hoist provide access into the pit.

A deluge sprinkler system provides fire protection throughout the building. Two sidings beyond the building provide onsite storage for up to 16 rail cars.

2.5.1.2 Elevating Conveyor

This conveyor transports the coal approximately 400 meters (1,312 feet) to the silo fill gallery located above the four coal storage silos. A belt scale measures the coal during transport. Three reversing type belt feeders in the gallery distribute coal to the selected storage silo.

A series of inclined structural steel trusses support the elevating conveyor. The trusses are supported in turn by steel towers on concrete footings. The conveyor itself is enclosed and protected from fire by a deluge sprinkler system. An unenclosed catwalk alongside facilitates maintenance.

2.5.1.3 Silo Fill Gallery

The silo fill gallery is completely enclosed with a concrete floor and metal wall and roof systems. A dry filter Dust Collection System removes loose coal dust. A deluge sprinkler system provides fire protection.

2.5.2 Electrical Generation System

Electrical energy required for all onsite use is produced and distributed by the Electrical Generation System. The Electrical Generation System is shown schematically on Black & Veatch Drawing M2001 (Figure 2-16). The design criteria for the Electrical Generation system are:

- Provide adequate capability for distribution of electrical power from off site and on site sources to meet plant requirements.
- Provide electrical generating capacity from excess process heat for plant electrical requirements.
- Provide capability to furnish excess electrical power to potential off site users.

2.5.2.1 Turbine-Generator

The electrical energy is to be produced by a turbine-generator which is powered by steam from the steam generator described in Section 2.3.4. Steam from the steam generator powers a multi stage, single extraction, condensing turbine, which in turn drives a generator to produce the required electrical output. Estimated connected electrical load for the site is approximately 2.8 megawatts. The average operating load will be less than the connected load since all the processes will not be operating at full load all of the time.

The turbine generator has a nominal generating capacity of 3 megawatts. The nominal turbine-generator efficiency is 25%, which is equivalent to a turbine heat rate of 13,600 Btu/kwh.

The turbine-generator is a package-type unit, complete with pressure lubrication system, turbine controls, and other accessories. The turbine exhaust discharges to a surface condenser, where the remaining steam is condensed and the condensed liquid collected for recirculation in the feedwater cycle.

2.5.2.2 Main Steam

The Main Steam System transports steam from the superheater to the turbine inlet. The system also provides water induction protection for the turbine by providing means of collecting and safely disposing of any water which may be present in the main steam piping.

2.5.2.3 Condensate and Boiler Feedwater

The Condensate System transports feedwater from the condenser hotwell to the deaerator for heating and removal of entrained gases. Two full-capacity vertical pumps are provided. The Boiler Feedwater System, which includes the deaerator, heats the water to the required steam generator inlet temperature and transports the water to the steam generator drum. Two full-capacity boiler feed pumps are provided. Steam cycle losses are replaced by treated water from the offsite water supply. This makeup water is treated in a batch-type process by a demineralization system to produce the high purity water required for the feedwater cycle. Demineralized water is stored in the Demineralized Water Storage Tank and pumped to the condenser hotwell by the Cycle Makeup Water Pump as required.

Chemical feed pumps provide water conditioning chemicals to the feedwater for oxygen removal and for pH control.

The Boiler Feedwater System also supplies water to heat exchangers in the Sulfur Recovery System where the water is converted into steam for use in the Process Steam System.

2.5.2.4 Extraction Steam and Process Steam

Steam is extracted from an intermediate turbine stage for heating and deaeration of feedwater in the deaerator and for use in the Process Steam System. The Extraction Steam System also provides water induction protection for the turbine by providing means of collecting and safely disposing of any water present in the extraction piping, and by providing isolation from potential sources of water. Air-assisted stop check valves are provided in the steam piping. These valves are automatically closed when conditions indicate likelihood of water entering the extraction piping.

The Process Steam System provides steam for various services in the chemical process systems and collects the condensed steam and returns it to the feedwater cycle. Extraction steam and steam produced by the Sulfur Recovery System are directed into a pressure controlled piping header for supply to the chemical processes. Condensed steam, exiting the process, is collected and returned to the condenser hotwell for reuse in the feedwater cycle.

2.5.2.5 Electric Power Transmission and Distribution

The Electric Power Transmission and Distribution System takes the electrical energy produced by the generator and steps the voltage up in the main transformer to the transmission line voltage. The power is then transmitted to the switchgear for interconnection to the utility's power grid. The main auxiliary transformer uses a portion of the generator's output for the powering of auxiliary equipment within the plant, such as pumps, conveyors, fans, heating, ventilating, etc. The reserve auxiliary transformer supplies electricity to the facility when the turbine generator is not in operation.

2.5.3 Water Systems

The water systems provide water required for equipment cooling and for use in the chemical processes, as well as potable water for drinking and sanitary requirements. Water usage is minimized by recycling process water to the greatest extent possible.

The primary requirement for the design of the water system is that the system shall incorporate reasonable measures for water conservation.

Water is provided to fulfill the following requirements:

- Potable water is provided for drinking and for sanitary use.
- Water is provided for use in the various washers, scrubbers, mixing tanks, and other types of equipment in the chemical process systems and for plant service water. Some of this water is combined with other materials in the chemical processes, or is otherwise lost through evaporation, spillage, or other causes.
- Cooling water is provided to absorb heat rejected by equipment in the chemical process and generation systems.
- Water is provided for fire protection for buildings and equipment.

The following sections describe each water supply system. The calculated water requirement from off site for the operation of the plant is 1192 liters per minute (315 GPM).

2.5.3.1 Potable Water

Potable water for drinking and for sanitary use is provided from the offsite water supply. Final treatment of the water, to maintain required water quality, is done onsite.

2.5.3.2 Process Water

The Process Water System shown on Black & Veatch Drawing M2001 (Figure 2-16) provides water for use in the chemical processes and for plant service water. System functions include distribution of water to process use points and collection and treatment of contaminated water returned from the process for disposal or use in the Cooling Water System. Most of the water returning from the processes is contaminated. This contaminated water is treated where possible and reclaimed for use onsite. Where contamination is such that the water cannot be reclaimed, it is safely disposed of onsite in the evaporation ponds.

Water from the process water storage tank is distributed to a supply header by the Process Water Pumps. Two full-capacity pumps are provided.

Water exiting the process is directed to the Wastewater Treatment Building.

Water exiting the Spent Carbon Regeneration Process is collected in a Process Water Return Unit, which consists of a small tank with an integral pump, which transports the contaminated water through a separate return header to the Wastewater Treatment Building, where two parallel activated carbon filters remove trace amounts of absorbents present in the water. Because of the unknown nature of these absorbents, this water is not reused, but is discharged to onsite evaporation ponds for disposal.

Water leaving other processes with sufficient pressure to transport it to the remotely located treatment facility enters a return header directly. Water leaving the processes at or near atmospheric pressure is directed to one of two Process Water Return Units, which pump the water through the return header to the Wastewater Treatment Building for treatment by lime softening. The water is then transported by two full-capacity recycle water pumps to the recycled Water Storage Tank for use as makeup to the cooling tower.

2.5.3.3 Cooling Water

The Cooling Water System shown on Black & Veatch Drawing M2001 (Figure 2-16), provides a means to remove heat from equipment in the chemical process systems and in the cogeneration system.

Three half-capacity circulating water pumps transport water from the cooling tower basin to the central plant area. The cooling water stream is split, with part of the flow directed to the surface condenser and the remainder directed to a supply header in the central plant area where cooling water is provided to the equipment coolers and heat exchangers.

Cooling water leaving process equipment is collected in a return header which then combines the flow with water leaving the surface condenser. The water is then transported to a cooling tower where the heat is rejected to the atmosphere. The cooling water flow returns to the cooling tower basin for recirculation. Water lost from the system at the cooling tower by evaporation and drift is replenished as required to maintain the water level in the cooling tower basin. The primary makeup source is the Recycled Water Storage Tank, which provides makeup water flow by gravity through a control valve to the basin. The offsite water supply provides a backup source of makeup water.

The quality of the water in the cooling tower basin is monitored, and chemical treatment is provided as required to control formation of mineral scale and biofouling.

2.5.3.4 Fire Water

The Fire Water System provides water for fire protection of buildings and equipment. Two fire pumps, one electric motor driven and one diesel engine driven, provide water flow on demand for deluge and sprinkler systems for buildings, conveyors, and equipment, and for fire hydrants and fire hoses.

2.5.4 Storage Systems

2.5.4.1 Coal Storage

The Coal Storage System receives coal from the Coal Handling System, stores it, and then transports a regulated quantity to the Coal Pretreatment System for production of activated carbon. The system is indicated schematically on Black & Veatch Drawings M2000 and M1000 (Figures 2-15 and 2-50).

The primary criteria for the Coal Storage System design are:

- Contain an eight days supply of coal.
- Prevent the spread of coal dust to the atmosphere.
- Withstand local wind and seismic conditions.
- Provide for fire protection.

The Coal Storage System consists primarily of the four coal storage silos, each capable of storing approximately 680 metric tons (750 US tons) of coal weighing 721 kilograms per cubic meter (45 pounds per cubic foot). The silos themselves and the supporting structure are designed to be filled with coal weighing as much as 1,122 kilograms per cubic meter (70 pounds per cubic foot).

Coal is loaded into the storage silos by the silo fill conveyors located in the silo fill gallery above the silos. The system is designed so that two silos contain sufficient coal to support continuous activated carbon production for at least eight days. During this period, the remaining two silos can accept coal delivery from a 15 car unit train (assuming 90 metric ton, or 100 US ton, hopper cars). Coal is discharged by gravity to one of two

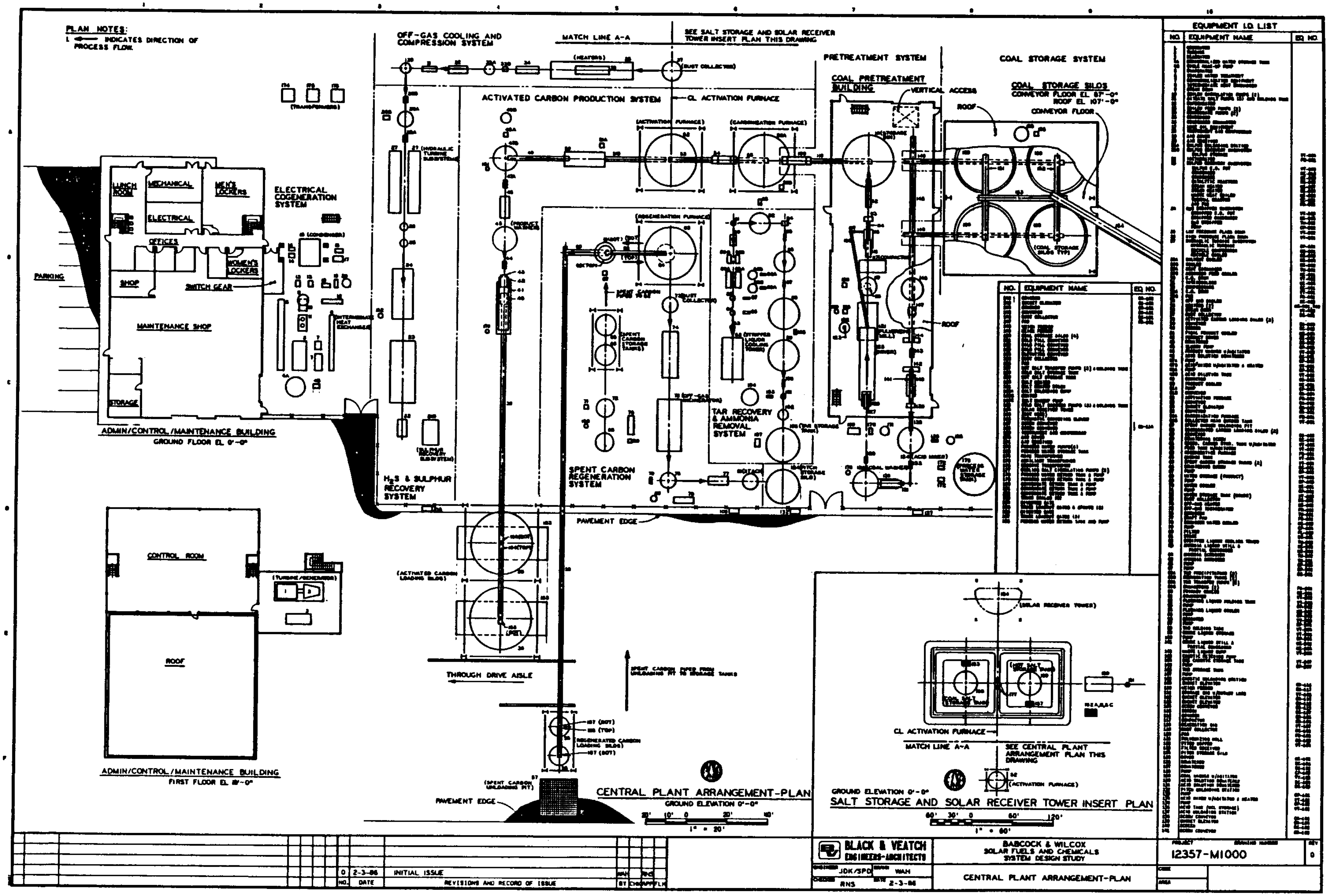
PLAN NOTES:
1. ← INDICATES DIRECTION OF PROCESS FLOW.
OFF-GAS COOLING AND COMPRESSION SYSTEM
MATCH LINE A-A
SEE SALT STORAGE AND SOLAR RECEIVER TOWER INSERT PLAN THIS DRAWING
(HEATERS)
(DUST COLLECTOR)
PRETREATMENT SYSTEM
COAL STORAGE SYSTEM
COAL PRETREATMENT BUILDING
VERTICAL ACCESS
COAL STORAGE SILOS
CONVEYOR FLOOR EL 87'-0"
ROOF EL 107'-0"
CONVEYOR FLOOR
ROOF
(TRANSFORMERS)
ACTIVATED CARBON PRODUCTION SYSTEM
CL ACTIVATION FURNACE
(ACTIVATION FURNACE)
(CARBONIZATION FURNACE)
(HYDRAULIC TURBINE SUBSYSTEM)
(PRODUCT WASHER)
(REGENERATION FURNACE)
(SPENT CARBON STORAGE TANKS)
(DUST COLLECTOR)
(OFF-GAS INCINERATOR)
(STRIPPED LIQUOR COOLING TOWER)
(TAR STORAGE TANK)
(COAL STORAGE TYP)
LUNCH ROOM
MECHANICAL
MEN'S LOCKERS
ELECTRICAL
OFFICES
WOMEN'S LOCKERS
SHOP
SWITCH GEAR
MAINTENANCE SHOP
STORAGE
PARKING
ELECTRICAL COGENERATION SYSTEM
(CONDENSER)
INTERMEDIATE HEAT EXCHANGER
ADMIN/CONTROL/MAINTENANCE BUILDING
GROUND FLOOR EL 0'-0"
H₂S & SULPHUR RECOVERY SYSTEM
SPENT CARBON REGENERATION SYSTEM
TAR RECOVERY & AMMONIA REMOVAL SYSTEM
PAVEMENT EDGE
(ACTIVATED CARBON LOADING SILOS)
THROUGH DRIVE AISLE
SPENT CARBON PIPED FROM UNLOADING PIT TO STORAGE TANKS
REGENERATED CARBON LOADING SILOS
(SPENT CARBON UNLOADING PIT)
CONTROL ROOM
(TURBINE/GENERATOR)
ROOF
ADMIN/CONTROL/MAINTENANCE BUILDING
FIRST FLOOR EL 18'-0"
CENTRAL PLANT ARRANGEMENT-PLAN
GROUND ELEVATION 0'-0"
20' 10' 0 20' 40'
1" = 20'
(SOLAR RECEIVER TOWER)
CL ACTIVATION FURNACE
MATCH LINE A-A
SEE CENTRAL PLANT ARRANGEMENT PLAN THIS DRAWING
(ACTIVATION FURNACE)
GROUND ELEVATION 0'-0"
SALT STORAGE AND SOLAR RECEIVER TOWER INSERT PLAN
60' 30' 0 60' 120'
1" = 60'
EQUIPMENT I.D. LIST
NO.
EQUIPMENT NAME
EQ NO.
0
2-3-86
INITIAL ISSUE
NO.
DATE
REVISIONS AND RECORD OF ISSUE
BY
CHK
APP
BLACK & VEATCH
ENGINEERS-ARCHITECTS
ENGINEER JDK/SPD
DRAWN WAH
CHECKED RNS
DATE 2-3-86
BABCOCK & WILCOX
SOLAR FUELS AND CHEMICALS
SYSTEM DESIGN STUDY
CENTRAL PLANT ARRANGEMENT-PLAN
PROJECT
DRAWING NUMBER
12357-M1000
REV
0
CODE
AREA

Figure 2-50

variable speed belt weigh feeders. These feeders transport the coal to Conveyor CN-101 in the Coal Pretreatment Building. Coal Pretreatment System controls regulate the feed rate. The Coal Storage System will supply coal to the Coal Pretreatment System at any rate up to 7256 kilograms (16,000 pounds) per hour. Conveyors have a maximum 14 degree angle of inclination.

The coal storage silos and supporting structure are designed for all applicable dead and live loadings including the effects of wind and seismic events. The coal storage silos are fabricated of structural steel plate. They are cylindrical in shape with parabolic bottoms. A braced structural steel frame supports the silos, as well as the silo fill gallery above. The entire structure is founded on a reinforced concrete mat. A Deluge Sprinkler System in each silo provides fire protection.

System discharge is designed for automatic control in conjunction with Coal Pretreatment System operation. Limit switches and other safety devices shut off the coal flow in the event of equipment failure, fire, or other emergency conditions.

The feeder room below the silos is enclosed with metal wall panels. A deluge sprinker system provides fire protection, while a dry filter dust collection system removes loose coal dust.

Dust control and fire protection throughout the system are a primary consideration. Passive dust control includes enclosure of all coal handling equipment and areas where coal is being handled. Active dust control includes dust suppression or collection systems.

2.5.4.2 Water

Water storage systems provide sufficient inventory of water to allow extended uninterrupted operation of the plant in the event of loss of the offsite water supply.

Process Water

The process Water Storage Tank provides sufficient storage to meet the water requirements of the chemical process systems for 12 hours of continuous operation. Water is provided to the tank from the offsite water supply system. The tank is a vertical, cylindrical tank constructed of carbon steel materials and erected on a concrete base. The inside of the tank is protected with a corrosion-resistant coating.

Recycled Water

Makeup water storage for the Cooling Water System is provided by the Recycled Water Storage Tank. Treated water from the Wastewater Treatment System is pumped into the tank for use as makeup to the cooling tower basin. The tank is sized to provide 12 hours supply of makeup water under normal plant operating conditions. The tank is a vertical, cylindrical tank constructed of carbon steel materials and erected on a concrete base. The inside of the tank is protected with a corrosion-resistant coating.

Fire Water

Water for fire protection is stored in the fire water tank. Storage volume is in accordance with NFPA regulations. The tank is a vertical, cylindrical tank constructed of carbon steel materials and erected on a concrete base. The inside of the tank is protected with a corrosion resistant coating.

2.5.4.3 Gas/Product Storage

Gas Storage

Off-gas produced as a by-product by the chemical process systems is collected and used for fuel for the salt heater. During each day, for a period of approximately eight hours, the required heating of the Salt Transport System is provided by the solar receiver, and the salt heater is not used. During this eight hour period, the off-gas produced is stored in one of two Gas Storage Vessels. Each vessel is a spherical tank mounted aboveground on steel supports which are, in turn, supported by a concrete foundation. Each vessel is sized for storage of eight hours production of off-gas. Pressure inside the vessel is controlled by throttling the pressure of the incoming gas.

Product Storage

Two Activated Carbon Loading Silos each store approximately 3-1/2 days of activated carbon production. The elevated silos discharge by gravity into trucks parked beneath. Two truck scales measure quantities being loaded.

Two smaller Regenerated Carbon Loading Silos each store a full truckload of regenerated carbon, including an allowance for water. Both silos are elevated above the loading area and discharge by gravity. Since regenerated carbon is processed in discreet batches, no truck scales are required.

2.6 Overall Plant Layout

2.6.1 Central Plant Arrangement

The central plant area includes most of the balance of plant facilities including chemical process systems and the electrical cogeneration system. The Administration/Control/Maintenance (ACM) Building, the Coal Pretreatment Building, and the Coal Storage Silo Structure are also located in this area. The area is fenced with remote control gates operable from the main control room. Overhead area lighting provides additional security and facilitates nighttime operation. Black & Veatch Drawing M1000 (Figure 2-50) shows the arrangement.

The ACM Building is strategically located in the central plant area to service the various activities associated with the process operations. A portion of the building is two story with the second story containing the control room. The control room has windows on all four sides enabling the operators to overview the turbine-generator, collector field, and process areas. The Administration/Maintenance area of the building provides office, locker room, maintenance, and equipment facilities. The lower story is approximately 212 square meters (2,282 square feet), while the upper control area is approximately 85 square meters (915 square feet).

Equipment in the Central Plant Area is arranged to establish logical and sequential streams of water, steam, and product flow through the various process and cogeneration systems. The equipment locations shorten interconnecting piping and conveyors between equipment as much as possible, yet provide for adequate area around equipment for maintenance and auxiliary systems. The Coal Storage and Pretreatment Systems, the "dirty" facilities, are located as far east and downwind as possible to minimize the impact of dust on the solar collector field. The "clean" facilities, the ACM Building, Electrical Cogeneration System, etc., are located on the west, or upwind side.

Except for coal, all raw materials and all marketable products are transported to and from the plant by truck. Loading and unloading facilities are grouped together on the south side of the central plant area and are accessible from a one-way circular drive. Several loading/unloading operations can be carried on simultaneously since trucks approach the facilities in discreet traffic lanes without backing.

2.6.2 Site Arrangement

The site arrangement is shown on Figure 2-51. For the purposes of this study it was assumed that the site is a desert environment located in the Barstow, California area. The total site encompasses approximately 121.4 ha. (300 acres). Of this, approximately 8.1 ha. (20 acres) is considered improved and 113 ha. (280 acres) unimproved. The solar collector field consisting of 40.5 ha. (100 acres) is unimproved except as necessary to provide access for erection of the heliostats, maintenance, and dust control. The plant area, considered improved, is paved with asphalt or otherwise covered with crushed rock. The primary philosophy governing the arrangement of the site is to keep salt pipe run lengths to a minimum and to minimize the fugitive particle collection on the heliostats from the coal. The direction of the prevailing winds is a very site specific parameter and plays a significant role in the overall site layout, particularly the location of the coal unloading facilities. For this study the prevailing wind is assumed to be westerly. In the arrangement shown, only winds from approximately 145 to 180 degrees could constitute a problem. Prevailing winds directly from the south would be the worst situation, requiring a relocation of the coal unloading facilities to the east, west or north side of the collector field; or extreme fugitive dust preventative measures would have to be provided. For most all other wind directions the design can incorporate a relocation of the coal unloading facilities with minimum impact on the overall site arrangement.

Site Arrangement

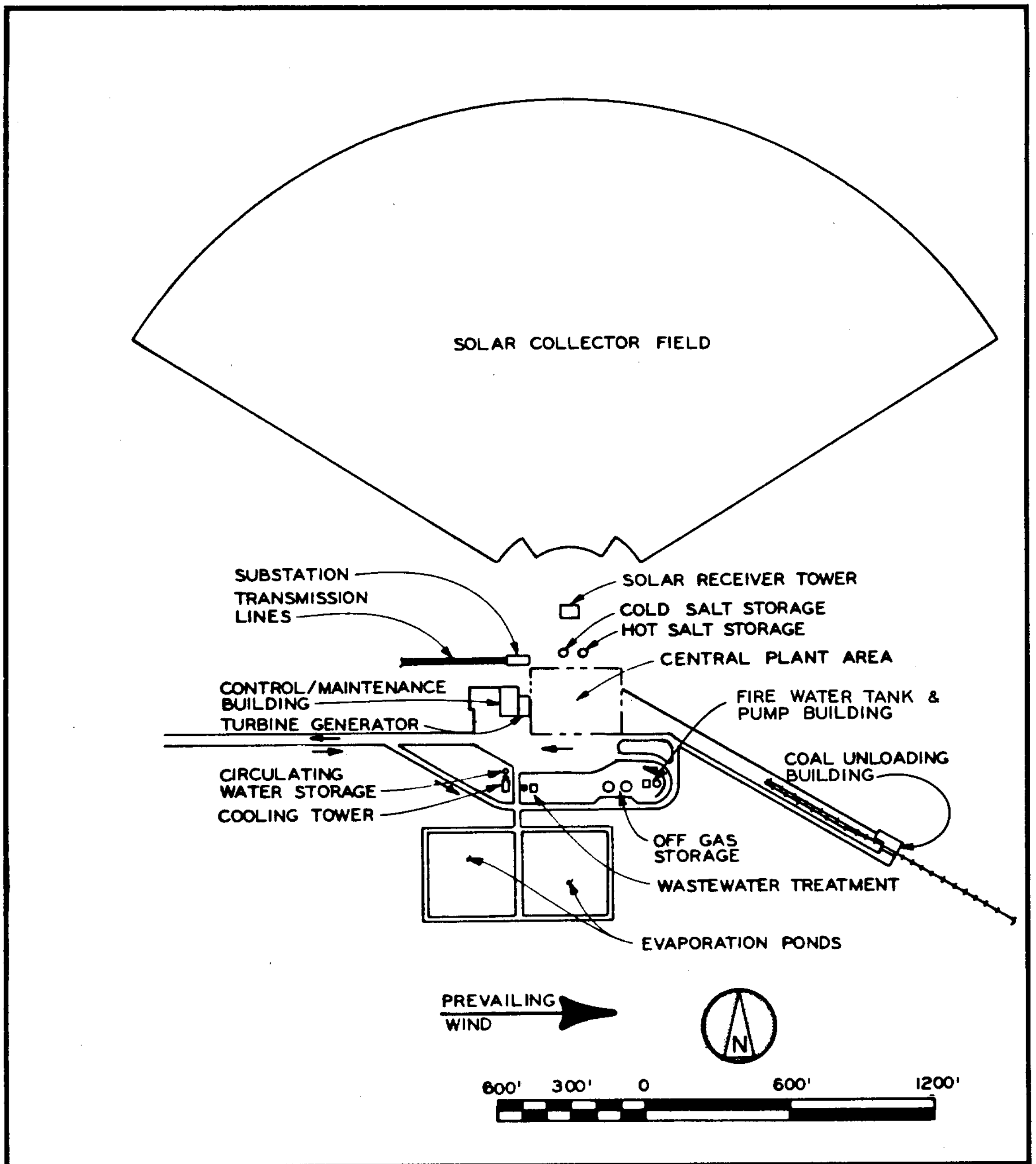

BLACK & VEATCH
ENGINEERS-ARCHITECTS

ENGINEER RNS
DRAWN WAH
CHECKED RNS
DATE 2-3-86

NO	DATE	REVISIONS AND RECORD OF ISSUE	BY	CHK	APP	FLM
0	2-3-86	INITIAL ISSUE	WAH		RNS	

BABCOCK & WILCOX
SOLAR FUELS AND CHEMICALS
SYSTEM DESIGN STUDY

PROJECT DRAWING NUMBER 12357 – S3000
REV 0

CODE
AREA

SITE ARRANGEMENT

Figure 2-51

The hot and cold salt storage tanks are located close to the tower to shorten costly pipe runs. The central plant area is likewise located close to the salt storage tanks.

The direction of the transmission lines, access road and incoming railroad tracks is arbitrarily selected and can be relocated to suit specific site conditions with little impact on the overall site arrangement.

Off gas storage is placed far enough away from normally occupied areas to minimize the potential hazard to personnel and equipment.

For security purposes the central plant area will be fenced to preclude unauthorized entry. Access to the fenced area will be controlled from the control building through remote controls to the gates.

Patrol and secondary access roads will be improved only to that extent necessary depending upon site conditions. Only minimal grading is considered for this study.

2.7 System Operation and Control Strategy

The solar fuels and chemicals plant for the production of activated carbon and the regeneration of spent carbon is defined in terms of three major subsystems as shown on Figure 2-5: The Solar Heat Transport Subsystem, the Chemical Process Subsystem, and the Collector Field Subsystem. The operation and control of the three subsystems must be integrated to assure proper overall plant operation. The following sections describe the operation and control strategy for the Chemical Process Subsystem and for the Solar Heat Transport Subsystem. The operation and control strategy for the Collector Field Subsystem was specifically excluded from the work scope of this contract by Sandia National Laboratories.

2.7.1 Chemical Process Subsystem Operation and Control Strategy

The chemical process subsystem depends upon the operation of the solar heat transport subsystem. The chemical process cannot operate without "fuel" (supplied as hot molten carbonate salt) from the heat transport subsystem. Molten salt provides energy to the carbonization, activation and regeneration furnaces. Although these furnaces are fitted with gas burners, they provide only enough heat for start-up and emergency situations. The operation and control of these furnaces must be closely integrated with the solar salt heat transport subsystem to insure smooth operation.

Detailed process control diagrams were formulated and are presented in Section 2.7.1.4. These drawings also contain a detailed material balance with process conditions. An instrument loop summary list based on these drawings is presented in Section 2.7.1.5.

2.7.1.1 Start-Up

Before the initial plant start-up, all applicable equipment should be "water-batched" to insure proper operating condition of the equipment. For example, in the pretreatment section of this plant, the acid tank, acid mixer, dewaterers and coal washer would be operated with water only. During this period all equipment would be checked for proper operation. Pumps, tanks, piping, valves, and other equipment would be checked for leaks. Control schemes, where possible, would also be checked under water conditions only. Other equipment, such as crushers, grinders, and compressors should be pre-checked as much as possible before actual raw materials are fed. Guidance should be provided by the equipment manufacturer. Water batching also provides the operators the opportunity to learn controls and operation of the plant under simulated conditions. After equipment has been fully checked out and safe operation can be insured, plant start-up can begin.

The pretreatment section of the plant would be started first. This section can be run independently of the balance of the plant because of storage provided (approximately 24 hours). A level of dilute acid is first established in the acid mixer (VT-101) and a level of water is established in the coal washer (CT-103). The dust collection system (DC-101) is next put into operation before coal can be fed from storage. When all conveying and other equipment is checked for proper operation, coal from storage can be fed to the pretreatment system. Pitch should be carefully added to the crushed, washed coal when feed to the pulverizing mill is established. The actual ratio of pitch to coal should be established based on the pellet characteristics formed by the compactor (CR-104). Final ratios will be determined by the activated carbon product. A controller (WIC-102) is proved for the pitch flow to the pulverizing mill.

When a level has been established in the VT-105 storage bin and when salt flow and temperature requirments have been attained, start-up of the carbonization and activation furnaces can begin. The furnaces should first be slowly heated with the start-up gas burners. Furnace temperatures in excess of 397^{o}C (747^{o}F) must be attained before any salt is added to the platecoils. The furnace burners have been sized to heat the system to 482^{o}C (900^{o}F). This is required to prevent the freezing of salt in the platecoils. Once the temperatures of the furnaces are high enough, salt flow to the furnace should be established. Initially "cold" salt should be added to prevent any temperature shock to the furnace. After salt flow is established to both the carbonization and activation furnaces, carbon feed to the carbonization furnace can begin. The initial carbon flow should be minimized in order to assure a smooth start-up. The salt temperature and salt flow should be slowly increased as the carbon flow to the furnace is slowly increased. The ramping of temperature and flow should prevent damage to the system components.

When the carbonization and activation furnaces are started the balance of the plant should be put into operation. The product acid washing system would be started-up in a manner similar to the pre-treatment section. The off-gas treatment systems would be brought on line as per recommendation of the design engineering firm. Generally, liquid flows for the scrubbers and absorbers are established before gas can be fed. As off-gas is produced in the reaction furnaces, these clean-up systems are slowly brought up to operating conditions.

Start-up of the regeneration system can be done separately from the production path. The furnace start-up is similar to the others, except the furnace temperatures are brought to higher temperatures because of the additional gas burners provided to attain the required re-activation temperatures. When furnace temperatures above 397°C (747°F) are attained, molten salt flow can be established. The spent carbon is then slowly fed to the furnace. The feed rate of spent carbon is increased to full operating load; gas and salt flows are adjusted as the carbon flow is increased.

2.7.1.2 Normal Operation

The process control diagrams in Section 2.7.1.4 indicate conditions for normal operation at full capacity. Control loops are provided for all important parameters. A summary of the control loops is provided in Section 2.7.1.5. These loops control levels, temperatures, pressures and flows throughout the process and are designed to handle operating variations in the system.

Under normal operating conditions, the regeneration system would be operated under "batch" mode. After a batch of spent carbon is processed, the furnace is placed in a "stand-by" mode. Minimum gas and salt flows are maintained to keep the furnace at operating condition. This is required to keep the furnace temperature from cycling which would shorten the operating life of the furnace.

The salt flow control system for the chemical reaction furnaces has been designed to minimize flow and temperature fluctuations of the salt leaving the chemical process subsystem. The salt from the chemical reaction furnaces is fed forward to the steam generator system. A simplified process salt control diagram is provided in Section 2.2.3 (Figure 2-14). A detailed process control diagram is provided in Section 2.7.1.4 as drawing number B&W-P419-9106-D. This drawing shows normal salt and temperature flows and all controls required for the operation of the chemical reaction furnaces.

By-passes are provided around each furnace to allow for independent operation. Normally the carbonization and activation furnaces are operated together. Salt flow to the activation furnace is controlled by a BTU controller. The BTU controller measures the amount of BTUs input to the furnace by the molten salt. The salt flow and inlet/outlet temperature difference provide this information. The amount of heat provided to the furnace is determined by the carbon flow rate and the desired outlet temperature. When the carbon flow rate is changed, the BTU controller will automatically adjust the BTU input to maintain the desired operating conditions. Salt flow to the individual hearths can be changed by manual valves. It is envisioned that the operating set point of these by-pass valves would be set during initial start-up and subsequent operation of the furnace. If raw material characteristics change or different product characteristics are desired these by-pass valves can be re-set.

A flow controller is provided downstream of the activation furnace. If the carbonization and regeneration systems desire more salt than the activation furnace is presently using, hot salt would be by-passed around the activation furnace. Because the carbonization and regeneration systems were designed for 829°C (1525°F) salt, a temperature controller is provided to prevent this temperature from becoming too hot. If hot salt is bypassed around the activation furnace it would be tempered with cold salt. A relatively constant feed temperature to the furnaces would insure a smooth operation.

The carbonization furnace has a much higher demand for salt than the regeneration system (268,000 lbs/hr vs. 63,000 lbs/hr). A by-pass around the carbonization furnace is provided. If an upset condition demands a major decrease in salt flow to the carbonization furnace, the excess salt would be by-passed around the carbonization furnace without "shocking" the regeneration system. This allows the regeneration system by-pass valves to be designed for much smaller flows.

Similar control systems are provided for the regeneration system except it is separated into three independent sections. The "bake" section of the regeneration furnace is controlled by a BTU Controller, while the off-gas heater and the "dry" section operate strictly on temperature control. The entire regeneration system can be by-passed when the furnace is not operating.

2.7.1.3 Shutdown

A major concern during a shut-down, either planned or emergency, is the potential for salt freeze-up in the platecoils. The furnaces should be cooled down slowly so as to avoid any thermal shock to the refractory and other internal components. During a normal shut-down, the feed flow would be slowly discontinued allowing a gradual decrease in the demand for heat from the molten salt. The temperature and flow of the molten salt should be gradually decreased as the demand for heat is reduced. If the furnace shut-down is for a brief period (as is the case with the regeneration furnace) a minimum flow of tempered salt should be maintained through the heat transfer coils. This would keep the furnace warm and ready for start-up.

The platecoils should be designed and installed in such a manner to allow draining of the salt from the furnace. This would be required in the case of pump or electric failure which would result in the sudden stoppage of all flows. If these were not re-established the salt could freeze in platecoils if the furnaces were allowed to cool-down.

2.7.1.4 Process Control Diagrams

The Chemical Process Subsystem process control diagrams are shown on the following figures:

Figure	Olin Drawing #	Title
2-52	B&W P419-9101-D	Pretreatment
2-53	B&W P419-9102-D	Carbonization, Activation, and Off-Gas Cooling and Compression
2-54	B&W P419-9103-D	Tar Recovery and Ammonia Removal
2-55	B&W P419-9104-D	H_2S Removal and Sulfur Recovery
2-56	B&W P419-9105-D	Regeneration of Spent Carbon
2-57	B&W P419-9106-D	Chemical Reaction Furnaces

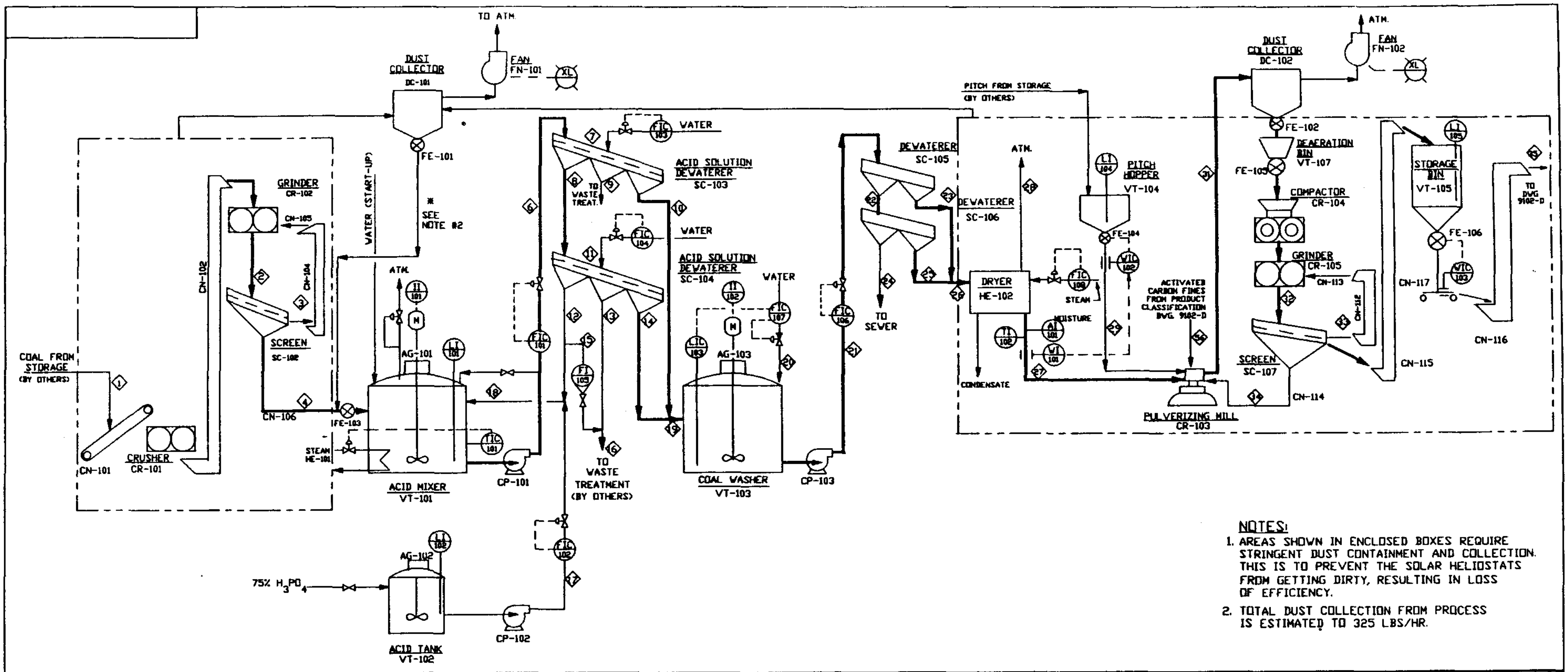

NOTES:
1. AREAS SHOWN IN ENCLOSED BOXES REQUIRE STRINGENT DUST CONTAINMENT AND COLLECTION. THIS IS TO PREVENT THE SOLAR HELIOSTATS FROM GETTING DIRTY, RESULTING IN LOSS OF EFFICIENCY.
2. TOTAL DUST COLLECTION FROM PROCESS IS ESTIMATED TO 325 LBS/HR.

STREAM NUMBER	1	2	3	4	5	6	7	8	9	10	11	12
COMPONENT												
COAL	13000.0	21450	8450.0	13000.0		13000.0		1300.0		11700.0		
CHAR												
ACT. CARBON												
PITCH OR TAR												
WATER	2294.0	3785.1	1491.1	2294.0		28846.5	25097.7	26820.1	25064.2	2059.9	2795.0	26601.2
H_3PO_4						1397.5		1301.9	91.0	4.6		1291.4
TOTAL (LBS/HR)	15294.0	25235.1	9941.1	15294.0		43244.0	25097.7	29422.0	25155.2	13764.5	2795.0	27892.6
TEMPERATURE (°F)	77	80	80	80		176	77	175	77	80	77	170
TEMPERATURE (°C)	25	27	27	27		80	25	79	25	27	25	77
PRESSURE (PSIA)	14.7	14.7	14.7	14.7								

STREAM NUMBER	13	14	15	16	17	18	19	20	21	22	23	24
COMPONENT												
COAL		1300.0					13000.0		13000.0	1300.0	11700.0	
CHAR												
ACT. CARBON												
PITCH OR TAR												
WATER	2785.2	228.7	85.4	2870.6	36.7	26552.5	2288.6	27950.0	30238.6	28174.3	2064.3	27944.8
H_3PO_4	9.8	0.7	4.1	13.9	110.2	1397.5	5.3		5.3	5.3		5.3
TOTAL (LBS/HR)	2795.0	1529.4	89.5	2884.5	146.9	27950.0	15293.9	27950.0	43243.5	29479.6	13764.3	27950.1
TEMPERATURE (°F)	77	80	170	80	77	170	80	77	78	77	77	77
TEMPERATURE (°C)	25	27	77	27	25	77	27	25	26	25	25	25
PRESSURE (PSIA)												

STREAM NUMBER	25	26	27	28	29	30	31	32	33	34	35		56	
COMPONENT														
COAL	1300.0	13000.0	13000.0				18200.0	26000.0	7800.0	5200.0	13000.0			
CHAR														
ACT. CARBON							81.9	117.0	35.1	23.4	58.5		58.5	
PITCH OR TAR					1444.3		2022.2	2888.6	866.5	577.9	1444.3			
WATER	229.5	2293.8	684.5	1609.3			958.1	1368.9	410.8	273.7	685.8		1.3	
H_3PO_4														
TOTAL (LBS/HR)	1529.5	15293.8	13684.5	1609.3	1444.3		21262.2	30374.5	9112.4	6075.0	15188.6		59.8	
TEMPERATURE (°F)	77	77	212	212	77		210	200	200	200	175		100	
TEMPERATURE (°C)	25	25	100	100	25		99	93	93	93	79		38	
PRESSURE (PSIA)		14.7	14.7	14.7	14.7		14.7	14.7	14.7	14.7	14.7		14.7	

SOLAR FUELS & CHEMICALS SYSTEM
DESIGN STUDY
BABCOCK & WILCOX
P.O.# 719665JC

REV.	DESCRIPTION	DRAWN	DATE	CHK'D.	APPR.

DRAWN DATE B. HARDY 10/31/85
CHECKED DATE JHB 2-6-86
APPROVED

Olin
PLANT: SOLAR/CARBON

PROJECT NO.	CAR NO.	SCALE
P419	——	NONE

ACTIVATED CARBON PRODUCTION
PROCESS CONTROL DIAGRAM
PRETREATMENT

DRAWING NO. B&W-P419-9101-D
REV. 0
2/3/86

CAD # P419PR#2

Figure 2-52

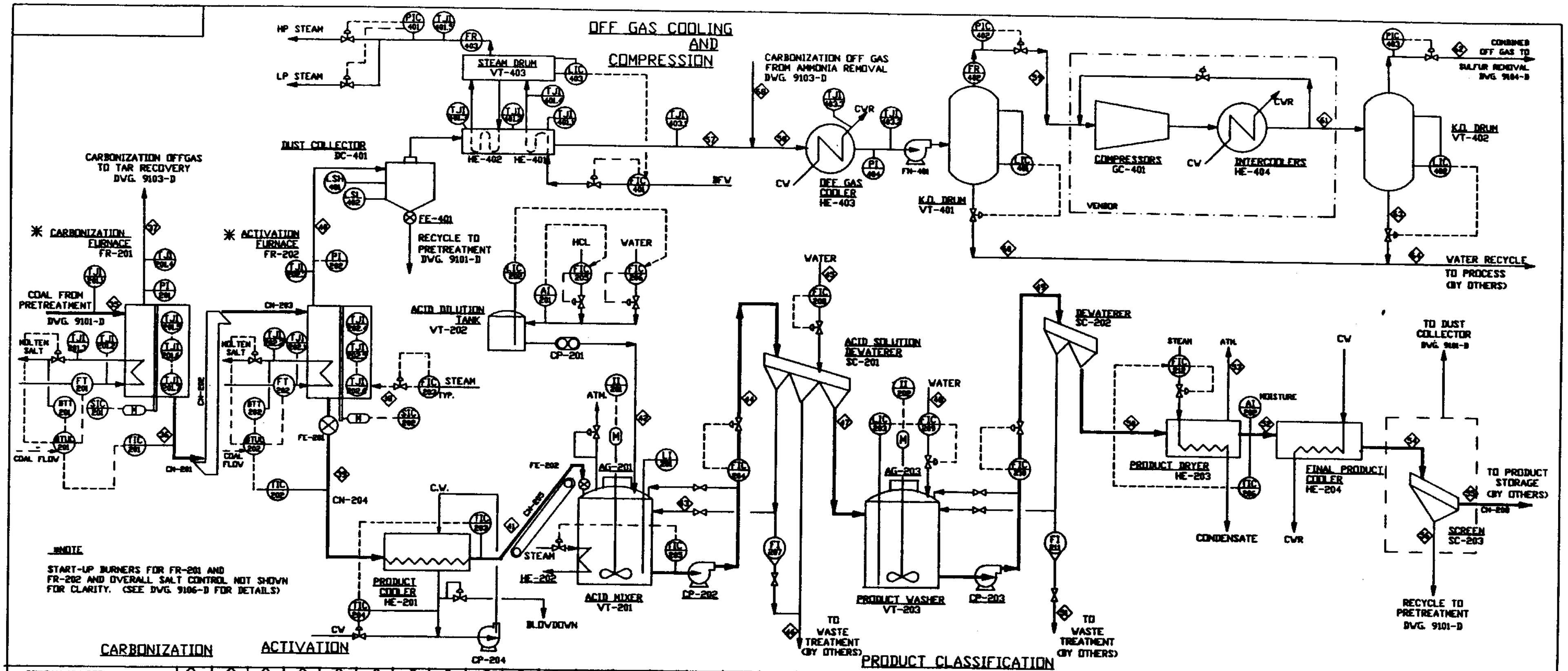

STREAM NUMBER	35	36	37	38	39	40	41	42	43	44	45	46	47	48	49	50	51	52	53	54	55	56	57	58	59	60	61	62	63	64	◇	◇	[illegible]	◇	◇	◇	◇	◇
COMPONENTS																																						
COAL	13000.0																																					
CHAR		8625.5																																				
ACT. CARBON	58.5	58.5			3308.5		3308.5			3243.5			3243.5		3243.5	3243.5		3243.5		3243.5	3185.0	58.5																
PITCH OR TAR	1444.3		[illegible]																																			
WATER	685.8		[illegible]	21567.0		12129.0		552.5	1933.8	2486.3	3250.0	3231.2	571.3	3250.0	3821.3	572.4	3250.0	66.3	586.1	66.3	65.0	1.3	12129.0	12177.7	486.9	11690.9	486.9	35.7	451.1	12142.0			48.8					
H_3PO_4																																						
LIGHT OIL			65.0																					65.0	65.0		65.0	65.0					65.0					
GAS			1853.0			14768.0																	14768.0	15821.0	15821.0		15821.0	15821.0					1653.0					
NH_3			82.1																																			
H_2S			31.8			45.5																	45.5	76.7	76.7		76.7	76.7					31.2					
HCL								98.2	341.2	439.4		97.5	0.7		0.7		0.7																					
ACID SOLUBLE ASH									260.0	325.0		64.6	0.4		0.4		0.4																					
TOTAL (LB/HR)	15188.6	8684.0	6504.6	21567.0	3308.5	26942.5	3308.5	650.7	2535.0	6494.2	3250.0	3393.3	3815.9	3250.0	7065.9	3815.9	3251.1	3309.8	586.1	3309.8	3250.0	59.8	26942.5	28140.4	16449.5	11690.9	16449.5	15998.4	451.1	12142.0			1798.0					
TEMPERATURE (°F)	175	1112	932	420	1472	1472	180	77	170	180	77	80	80	77	78	78	78	212	212	100	100	100	250	242	95	95	95	95	95	95			120					
TEMPERATURE (°C)	79	600	500	216	800	800	82	25	77	82	25	27	27	25	26	26	26	100	100	38	38	38	121	117	35	35	35	35	35	35			49					
PRESSURE (PSIA)	14.7	14.7	14.7	89.7	14.7	15	14.7									14.7	14.7	14.7	14.7	14.7	14.7	14.7	15	15	30	28	350	350	350	20			15					

SOLAR FUELS & CHEMICALS SYSTEM
DESIGN STUDY
BABCOCK & WILCOX
P.O.# 710665JC

THIS DOCUMENT IS THE PROPERTY OF OLIN CORPORATION AND THE INFORMATION CONTAINED THEREIN IS CONSIDERED CONFIDENTIAL. THIS DOCUMENT IS NOT TO BE USED, REPRODUCED OR DISCLOSED IN WHOLE OR IN PART WITHOUT THE PRIOR WRITTEN PERMISSION OF OLIN.

REV.	DESCRIPTION	DRAWN	DATE	CHKD.	APPR.

DRAWN DATE B. HARDY 10/31/85
CHECKED DATE JWS 2-6-86
APPROVED R. Agress
A. Sarah 2-6-86
JW Barnett 2-6-86

Olin

PLANT: SOLAR/CARBON
PROJECT NO. ESR P419
CAR NO. ——
SCALE NONE

ACTIVATED CARBON PRODUCTION
PROCESS CONTROL DIAGRAM
CARBONIZATION, ACTIVATION AND
OFF-GAS COOLING AND COMPRESSION

DRAWING NO. B&W-P419-9102-D
REV. 0
2/3/86

CAD # P419OFG2

Figure 2-53

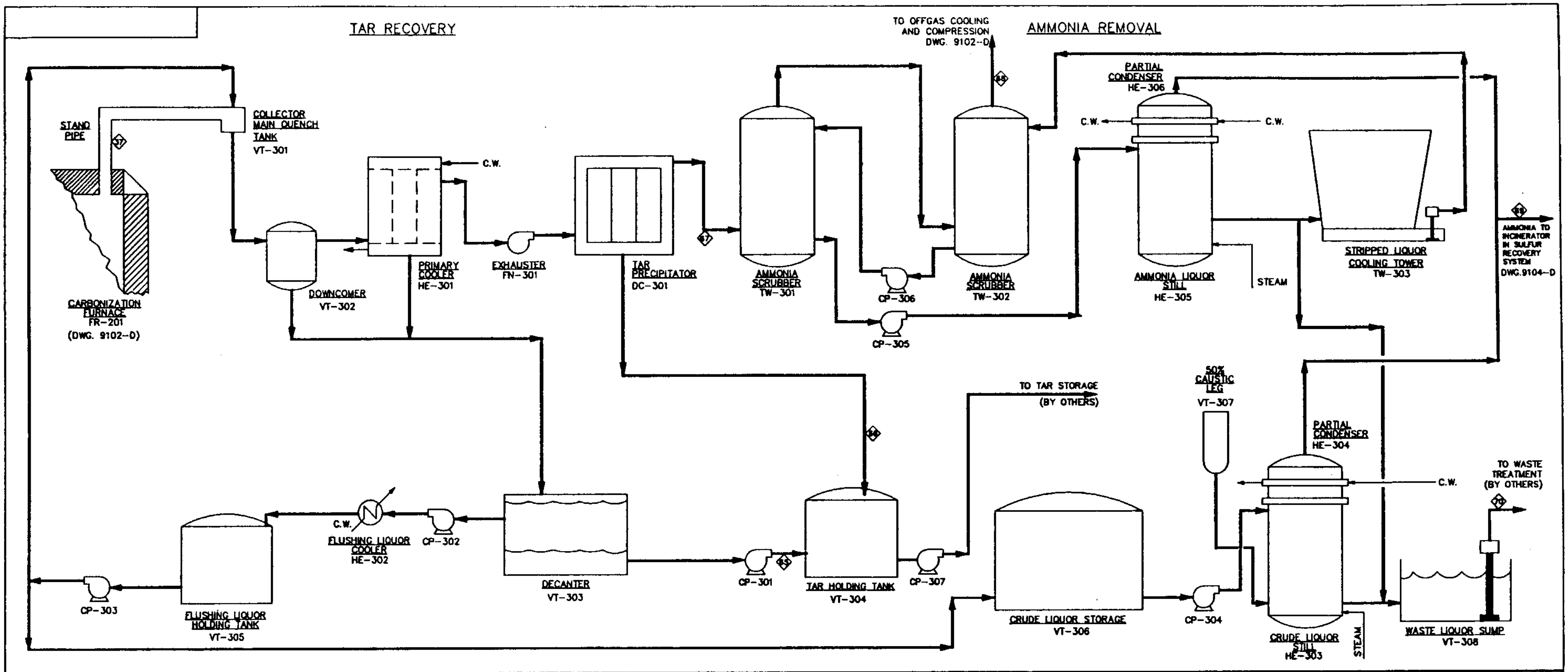

STREAM NUMBER	37			65	66	67	68	69	70
COMPONENTS									
COAL									
CHAR									
ACT. CARBON									
PITCH OR TAR	2542.8			2314.0	226.8				
WATER	2790.5					48.8	48.8	71.5	3737.5
H_3PO_4									
LIGHT OIL	65.0					65.0	65.0		
GAS	1053.0					1053.0	1053.0		
NH_3	22.1					22.1		22.1	
H_2S	31.2					31.2	31.2		
HCL									
ACID SOLUBLE ASH									
SALT									13.0
TOTAL (LB/HR)	6504.8			2314.0	226.8	1220.1	1198.0	93.6	3750.5
TEMPERATURE (F)	932			120	113	113	120	212	95
TEMPERATURE (C)	500			49	45	45	49	100	35
PRESSURE (PSIA)	14.7			14.7	18	18	15	15	30

THIS DOCUMENT IS THE PROPERTU OF OLIN CORPORATION AND THE INFORMATION CONTAINED THEREIN IS CONSIDERED CONFIDENTIAL. THIS DOCUMENT IS NOT TO BE USED, REPRODUCED OR DISCLOSED IN WHOLE OR IN PART WITHOUT THE PRIOR WRITTEN PERMISSION OF OLIN.

SOLAR FUELS & CHEMICALS SYSTEM
DESIGN STUDY
BABCOCK & WILCOX
P.O.# 719665JC

REV.	DESCRIPTION	DRAWN	DATE	CHKD.	APPR.

DRAWN T.E.GORDON
DATE OCTOBER 31, 1985
CHECKED JHB 2-6-86
APPROVED R. Agr... 2/6
B... 2-6-86
JH Barnett 2-6-86

Olin
PLANT: SOLAR/CARBON
PROJECT NO. ESR-P419
CAR NO. ———
SCALE NONE

ACTIVATED CARBON PRODUCTION
PROCESS CONTROL DIAGRAM
TAR RECOVERY AND
AMMONIA REMOVAL

DRAWING NO. B&W-P419--9103-D
REV. 0
2/3/86

CAD# P419TAR2

Figure 2-54

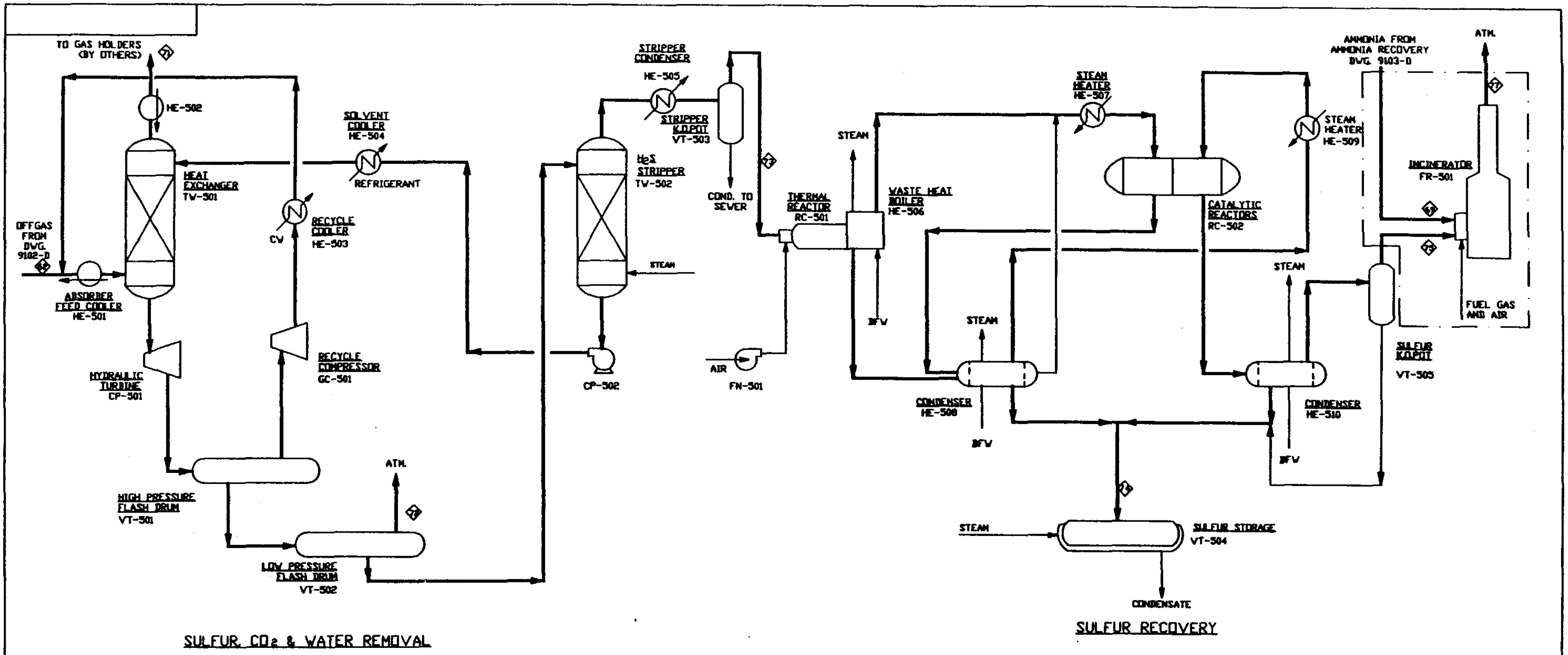

STREAM NUMBER	68	69	71	72	73	74	76		77
COMPONENTS									
WATER	35.0	71.5	2.6		1.6		123.5		234.0
LIGHT OIL	69.0		6.5		58.5				
PRODUCT GAS OR FLUE GAS							1163.5		1397.5
CO_2	4438.2		480.4	3051.9	185.9				
CO	9919.8		9905.8	13.0					
CH_4	377.0		364.7	12.4					
C_2H_6	79.0		78.0						
H_2	1008.8		1007.5	1.3					
NH_3		22.1							
H_2S	76.7				76.7		2.8		
SULFUR						69.6			
NO_x									4.5
SO_2									5.6
TOTAL (LBS/HR)	15998.5	93.6	11763.7	3078.6	322.7	69.6	1289.8		1641.6
TEMPERATURE (°F)	95	212	77	40	95	250	250		1600
TEMPERATURE (°C)	35	100	25	4	35	121	121		871
PRESSURE (PSIA)	350	15	350	100	60	40			

THIS DOCUMENT IS THE PROPERTY OF OLIN CORPORATION AND THE INFORMATION CONTAINED THEREIN IS CONSIDERED CONFIDENTIAL. THIS DOCUMENT IS NOT TO BE USED, REPRODUCED OR DISCLOSED IN WHOLE OR IN PART WITHOUT THE PRIOR WRITTEN PERMISSION OF OLIN.

SOLAR FUELS AND CHEMICALS SYSTEM
DESIGN STUDY
BABCOCK & WILCOX
P.O. # 719665JC

REV.	DESCRIPTION	DRAWN	DATE	CHKD.	APPR.

DRAWN DATE B. HARDY 10/31/85
CHECKED DATE JHS 2/6/86
APPROVED R. Ayer 2/6
Edwards 2-6-86
JH Bennett 2-6-86

Olin
PLANT: SOLAR/CARBON
PROJECT NO. ESR P419 | CAR NO. —— | SCALE NONE

ACTIVATED CARBON PRODUCTION
PROCESS CONTROL DIAGRAM
H_2S REMOVAL & SULPHUR RECOVERY

DRAWING NO. B&W-P419-9104-D
REV. 0
2/3/86
CAD # P419SUL2

Figure 2-55

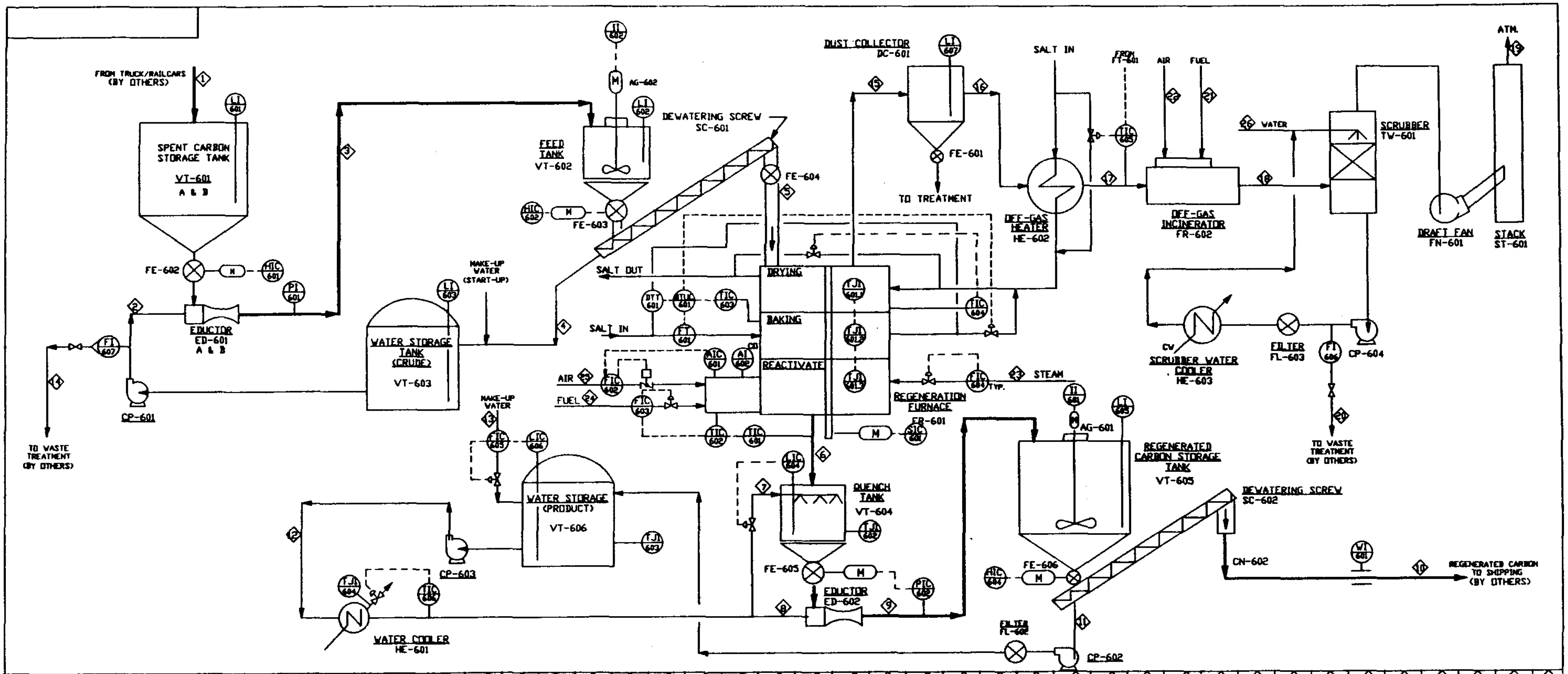

STREAM NUMBER	1	2	3	4	5	6	7	8	9	10	11	12	13
COMPONENT													
CARBON	2741		2741		2741	2604			2604	2604			
H_2O	3837	18996	22833	20275	2558		14400	7291	21691	2604	19087	21691	2604
CH_4													
O_2													
N_2													
CO_2													
CO													
H_2													
ABSORBENT	1096	10	1106	11	1095								
TOTAL (LBS/HR)	7674	19006	26680	20286	6394	2604	14400	7291	24295	5208	19087	21691	2604
TEMP (°F)	70	70	70	70	70	1750	80	80	130	130	130	123	70
TEMP (°C)	21	21	21	21	21	954	27	27	54	54	54	51	21
PSIA	14.7	80	40	14.7	14.7	14.7	80	80	40	14.7	14.7	80	30

STREAM NUMBER	14	15	16	17	18	19	20	21	22	23	24	25	26
COMPONENT													
CARBON		27					NEG						
H_2O	1279	5517	5517	5517	8654	17829	3000			2800			12175
CH_4								317			327		
O_2					1008	1008			6582			1308	
N_2		4305	4305	4305	25973	25973			21668			4305	
CO_2		899	899	899	5435	5435							
CO		896	896	896									
H_2		64	64	64									
ABSORBENT	1	822	822	822			NEG						
TOTAL (LBS/HR)	1280	12530	12503	12503	41444	50245	3000	317	28250	2800	327	5613	12175
TEMP (°F)	70	500	500	1200	1500	175	175	70	70	420	70	70	70
TEMP (°C)	21	260	260	650	815	79	79	21	21	216	21	21	21
PSIA	14.7	19	17	14.7	14.7	14.7	14.7	35	35	89.7	35	35	30

SOLAR FUELS AND CHEMICALS SYSTEM
DESIGN STUDY
BABCOCK & WILCOX
P.O.# 719665JC

THIS DOCUMENT IS THE PROPERTU OF OLIN CORPORATION AND THE INFORMATION CONTAINED THEREIN IS CONSIDERED CONFIDENTIAL. THIS DOCUMENT IS NOT TO BE USED, REPRODUCED OR DISCLOSED IN WHOLE OR IN PART WITHOUT THE PRIOR WRITTEN PERMISSION OF OLIN.

REV.	DESCRIPTION	DRAWN	DATE	CHKD.	APPR.

DRAWN DATE B. HARDY 10/31/85
CHECKED DATE JHB 2/6/86
APPROVED R. Agrawal 2/6
[illegible] 2-6-86
J.H. Carrett 2-6-86

Olin
PLANT: SOLAR/CARBON

PROJECT NO.	CAR NO.	SCALE
ESR P419	——	NONE

SPENT CARBON REGENERATION
PROCESS CONTROL DIAGRAM
REGENERATION

DRAWING NO. B&W-P419-9105-D
REV. 0
2/3/86

CAD# P419REG2

Figure 2-56

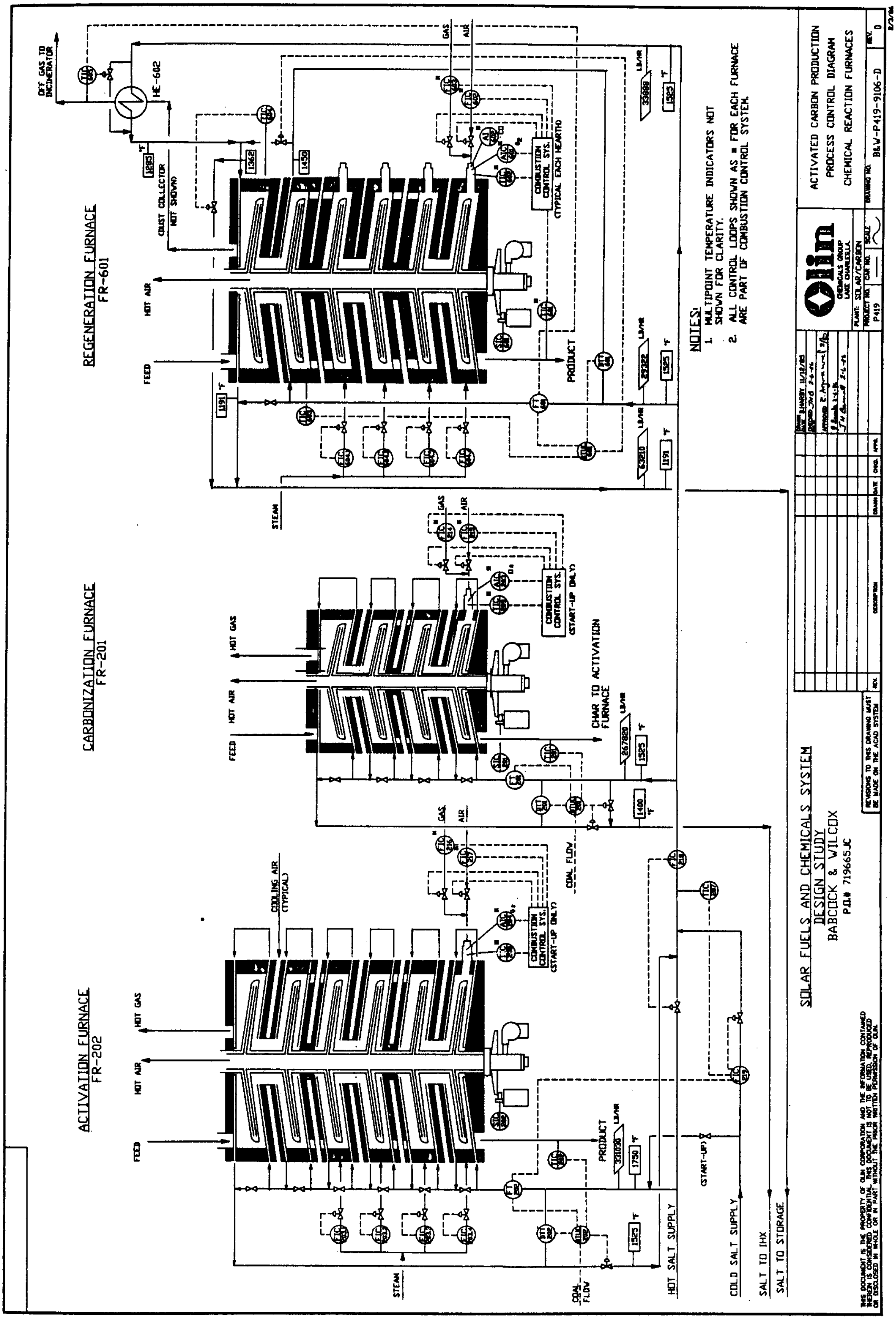
ACTIVATION FURNACE FR-202
CARBONIZATION FURNACE FR-201
REGENERATION FURNACE FR-601
FEED
HOT AIR
HOT GAS
COOLING AIR (TYPICAL)
STEAM
COAL FLOW
PRODUCT
CHAR TO ACTIVATION FURNACE
COMBUSTION CONTROL SYS. (START-UP ONLY)
COMBUSTION CONTROL SYS. (TYPICAL EACH HEARTH)
GAS
AIR
HOT SALT SUPPLY
COLD SALT SUPPLY
SALT TO IHX
SALT TO STORAGE
(START-UP)
OFF GAS TO INCINERATOR
HE-602
DUST COLLECTOR NOT SHOWN
LB/HR
°F
33030
1750
1525
267820
1525
1400
63210
1191
29322
1525
1191
33888
1585
1285
1362
1450
NOTES:
1. MULTIPOINT TEMPERATURE INDICATORS NOT SHOWN FOR CLARITY.
2. ALL CONTROL LOOPS SHOWN AS * FOR EACH FURNACE ARE PART OF COMBUSTION CONTROL SYSTEM.
SOLAR FUELS AND CHEMICALS SYSTEM
DESIGN STUDY
BABCOCK & WILCOX
P.O.# 719665JC
ACTIVATED CARBON PRODUCTION
PROCESS CONTROL DIAGRAM
CHEMICAL REACTION FURNACES
Olin
CHEMICALS GROUP
LAKE CHARLES, LA
PLANT: SOLAR/CARBON
PROJECT NO. P419
DRAWING NO. B&W-P419-9106-D
REV. 0
REVISIONS TO THIS DRAWING MUST BE MADE ON THE ACAD SYSTEM
THIS DOCUMENT IS THE PROPERTY OF OLIN CORPORATION AND THE INFORMATION CONTAINED THEREIN IS CONSIDERED CONFIDENTIAL. THIS DOCUMENT IS NOT TO BE USED, REPRODUCED OR DISCLOSED IN WHOLE OR IN PART WITHOUT THE PRIOR WRITTEN PERMISSION OF OLIN.

Figure 2-57

2.7.1.5 Instrument Loop Summary List

Following is the instrument loop summary list based on the process control diagrams shown in Section 2.7.1.4.

SPECIFICATION FORMS FOR PROCESS MEASUREMENT AND CONTROL INSTRUMENTS, PRIMARY ELEMENTS AND CONTROL VALVES

PROJECT: SOLAR FUELS & CHEMICAL STUDY
CUSTOMER: BABCOCK & WILCOX CO.
CUSTOMER JOB NO: P.O. # 710655JC
PLANT: SOLAR/CARBON
LOCATION: UNKNOWN

SUMMARY

INSTRUMENT LOOP SUMMARY
NOMENCLATURE LIST

REV	BY	DATE	REVISION

SHEET 1 OF 6

SPEC.NO. SUMMARY	REV@ 2
CONTRACT 710655JC	DATE: @

REQ. P.O. ESR#
P419-100

BY	CHK'D	APPR.
RA	RA	RA

INSTRUMENTATION NOMENCLATURE TABLE

LETTERS	DESIGNATION
AI	ANALYSIS INDICATOR
AIC	ANALYSIS INDICATING CONTROLLER
BTUC	BTU HEAT INPUT CONTROLLER
FI	FLOW INDICATOR
FIC	FLOW INDICATING CONTROLLER
FT	FLOW TRANSMITTER
HIC	HAND INDICATING CONTROLLER (MANUALLY OPERATED)
II	ELECTRIC CURRENT INDICATOR
LI	LEVEL INDICATOR
LIC	LEVEL INDICATING CONTROLLER
LSH	LEVEL SWITCH HIGH
LSL	LEVEL SWITCH LOW
PI	PRESSURE INDICATOR
PIC	PRESSURE INDICATING CONTROLLER
SIC	SPEED INDICATING CONTROLLER
TI	TEMPERATURE INDICATOR
TIC	TEMPERATURE INDICATING CONTROLLER
TJI	MULTIPOINT TEMPERATURE INDICATOR (SCANNING TYPE)
WI	WEIGHT INDICATOR
WIC	WEIGHT INDICATING CONTROLLER
DTT	DIFFERENTIAL TEMPERATURE TRANSMITTER
02	OXYGEN
CO	CARBON MONOXIDE

SPECIFICATION FORMS FOR PROCESS MEASUREMENT AND CONTROL
INSTRUMENTS, PRIMARY ELEMENTS AND CONTROL VALVES

PROJECT: SOLAR FUELS & CHEMICAL STUDY
CUSTOMER: BABCOCK & WILCOX CO.
CUSTOMER JOB NO: P.O. # 710655JC
PLANT: SOLAR/CARBON
LOCATION: UNKNOWN

SUMMARY

INSTRUMENT LOOP SUMMARY LIST

REV	BY	DATE	REVISION

SHEET 2 OF 6

SPEC.NO. SUMMARY
REV# 2

CONTRACT 710655JC
DATE: 02-05-86

REQ. P.O. ESR# P419-100

BY RA
CHK'D RA
APPR. RA

LOOP NO.	EQUIP NO.	SERVICE	STREAM I.D. NO.	REMARKS
AI -101	HE-102	MOISTURE CONC IN COAL FROM HE-102	27	
FIC -101	VT-101	FEED FLOW TO SC-103	6	
II -101	AG-101	ACID MIXER AGITATOR AMPS	---	
LI -101	VT-101	ACID MIXER TANK LEVEL	---	
TIC -101	VT-101	ACID MIXER TEMP	---	
WI -101	HE-102	COAL TAR FLOW	27	
FIC -102	VT-102	H3PO4 FLOW TO ACID MIXER	17	
II -102	VT-103	COAL WASHER AGITATOR AMPS	---	
LI -102	VT-102	ACID TANK LEVEL	---	
TI -102	HE-102	DRYER OUTLET TEMP	27	
WIC -102	VT-104	PITCH FLOW FROM HOPPER	29	
FIC -103	SC-103	FRESH H2O TO SC-103	---	
LIC -103	VT-103	COAL WASHER TANK LEVEL	---	
WIC -103	VT-106	PRETREATED COAL FLOW	35	
FIC -104	SC-104	FRESH H2O TO SC-104	---	
LI -104	VT-104	PITCH HOPPER LEVEL	---	
FI -105	SC-104	PURGE ACIDIC WATER FLOW	15	
LI -105	VT-105	COAL STORAGE BIN LEVEL	---	
FIC -106	VT-103	FEED FLOW TO SC-105	21	
FIC -107	VT-103	WATER FLOW TO VT-103	20	
FIC -108	HE-102	STEAM FLOW TO HE-102	--	
AI -201	VT-202	DILUTE HCL DENSITY	--	
BTUC-201	FR-201	HEAT INPUT CONTROLLER FOR CARBONIZATION		
DTT -201	FR-201	SOLAR SALT TEMP DIFF FOR CARB. FURNACE		
FT -201	FR-201	SOLAR SALT FLOW TO CARBONIZATION FURNACE	--	

NOTES:

PROJECT: SOLAR FUELS & CHEMICAL STUDY
CUSTOMER: BABCOCK & WILCOX CO.
CUSTOMER JOB NO: P.O. # 710655JC
PLANT: SOLAR/CARBON
LOCATION: UNKNOWN

SUMMARY

INSTRUMENT LOOP SUMMARY LIST

REV	BY	DATE	REVISION
1	RA	11/14/85	ADDED INSTR.

SHEET 3 OF 6

SPEC.NO. SUMMARY	REV# 2
CONTRACT 710655JC	DATE: 02-05-86
REQ.	P.O. ESR# P419-100

BY	CHK'D	APPR.
RA	RA	RA

LOOP NO.	EQUIP NO.	SERVICE	STREAM I.D. NO.	REMARKS
II -201	VT-201	ACID MIXER AGITATOR AMPS	--	
LI -201	VT-201	ACID MIXER LEVEL	--	
PI -201	FR-201	CARBONIZATION FURNACE PRESSURE	37	
SIC -201	FR-201	ROTATING SHAFT SPEED CONTROL-CARB. FURNAC	--	
TIC -201	FR-201	CARBONIZATION FURNACE OUTLET TEMP	36	
AI -202	HE-203	MOISTURE CONC FM PRODUCT DRYER OUT	52	
BTUC-202	FR-202	HEAT INPUT CONTROLLER-ACTIVATION FURNACE	--	
DTT -202	FR-202	SOLAR SALT TEMP DIFF FOR ACTIVATION FURN.	--	
FT -202	FR-202	SOLAR SALT FLOW TO ACTIVATION FURNACE	--	
II -202	VT-203	PRODUCT WASH TANK AGITATOR AMPS	--	
LIC -202	VT-202	ACID DILUTION TANK LEVEL	--	
PI -202	FR-202	ACTIVATION FURNACE PRESSURE	--	
SIC -202	FR-202	ROTATING SHAFT SPEED CONTROL-ACTIV. FURNA	--	
TIC -202	FR-202	ACTIVATION FURNACE OUTLET TEMPERATURE	39	
TJI -202	FR-202	ACTIVATION FURNACE TEMPERATURE	--	
AIC -203	FR-201	EXCESS O2 CONC IN CARBONIZATION	--	
FIC -203	FR-202	ATOMIZING STEAM TO ACTIVATION FURNACE	--	
LIC -203	VT-203	PRODUCT WASH TANK LEVEL	--	
TIC -203	HE-201	ACTIVATED CARBON COOLER OUTLET	41	
AIC -204	FR-202	EXCESS O2 CONC IN ACTIVATION FURNACE	--	
FIC -204	VT-201	ACID MIXER PRODUCT FLOW OUT	--	
TIC -204	HE-201	ACTIVATED CARBON COOLER H2O OUTLET	--	
FIC -205	VT-202	CONC HCL TO VT-202	--	
TIC -205	VT-201	ACID MIXER TANK TEMP	--	
FIC -206	VT-202	H2O TO HCL DILUTION TANK VT-202	--	

NOTES:

PROJECT: SOLAR FUELS & CHEMICAL STUDY
CUSTOMER: BABCOCK & WILCOX CO.
CUSTOMER JOB NO: P.O. # 710655JC
PLANT: SOLAR/CARBON
LOCATION: UNKNOWN

SUMMARY

INSTRUMENT LOOP SUMMARY LIST

REV	BY	DATE	REVISION
2	RA	12/09/85	ADDED INSTR
1	RA	11/14/85	ADDED INSTR

SHEET 4 OF 6

SPEC.NO. SUMMARY	REV# 2
CONTRACT 710655JC	DATE: 02-05-86
REQ. P.O. ESR# P419-100	

BY	CHK'D	APPR.
RA	RA	RA

LOOP NO.	EQUIP NO.	SERVICE	STREAM I.D. NO.	REMARKS
TIC -206	HE-203	PRODUCT DRYER OUTLET TEMP	--	
FI -207	SC-201	PURGE WATER TO WASTE TREATMENT	--	
TIC -207	FR-201	TEMPERED SOLAR SALT SUPPLY TO FR-201/601	--	
FIC -208	SC-201	WATER TO ACID SOLUTION DEWATERER	--	
TIC -208	FR-202	ACTVATION FURNACE BURNER TEMP	--	
FIC -209	VT-203	PRODUCT WASH TANK WATER FLOW	--	
TIC -209	FR-201	CARBONIZATION FURNACE BURNER TEMP	--	
FIC -210	VT-203	PRODUCT FLOW FM PRODUCT WASH TANK	49	
FI -211	SC-202	PURGE WATER TO WASTE TREATMENT	--	
FIC -212	HE-203	STEAM FLOW TO PRODUCT DRYER	--	
FIC -214	FR-201	NATURAL GAS TO CARBONIZATION FURNACE	--	
FIC -215	FR-201	COMBUSTION AIR TO CARBONIZATION FURNACE	--	
FIC -216	FR-202	NATURAL GAS TO ACTIVATION FURNACE BURNER	--	
FIC -217	FR-202	COMBUSTION AIR TO ACTIVATION FURNACE	--	
FIC -218	FR-201	TEMPERED SOLAR SALT FLOW TO FR-201/FR-601	---	
FIC -219	FR-201	COLD SALT FLOW TO FR-201/FR-601	---	
FIC -401	HE-401	BFW FLOW TO HE-401	---	
LIC -401	VT-401	OFF-GAS K.O. DRUM LEVEL	---	
LSH -401	DC-401	DUST COLLECTOR LEVEL HIGH	---	
PIC -401	VT-403	STEAM DRUM PRESSURE	---	
TJI -401	HE-401	WASTE HEAT & STEAM PRODUCTION TEMP.	---	
FR -402	VT-401	OFF-GAS K.O. DRUM FLOW	---	
LIC -402	VT-402	COMPRESSED OFF-GAS K.O. DRUM LEVEL	---	
LSL -402	DC-401	DUST COLLECTOR LEVEL LOW	---	
PIC -402	VT-401	OFF-GAS K.O. DRUM PRESSURE	---	

NOTES:

HOR010044

OLINS1.2

SPECIFICATION FORMS FOR PROCESS MEASUREMENT AND CONTROL
INSTRUMENTS, PRIMARY ELEMENTS AND CONTROL VALVES

PROJECT: SOLAR FUELS & CHEMICAL STUDY
CUSTOMER: BABCOCK & WILCOX CO.
CUSTOMER JOB NO: P.O. # 710655JC
PLANT: SOLAR/CARBON
LOCATION: UNKNOWN

SUMMARY

INSTRUMENT LOOP SUMMARY LIST

REV	BY	DATE	REVISION
2	RA	12/09/85	CHANGED TAG

SHEET 5 OF 6

SPEC.NO. SUMMARY	REV@ 2
CONTRACT 710655JC	DATE: 02-05-86

REQ. P.O. ESR# P419-100

BY	CHK'D	APPR.
RA	RA	RA

LOOP NO.	EQUIP NO.	SERVICE	STREAM I.D. NO.	REMARKS
FR -403	VT-403	STEAM FLOW TO PROCESS FROM STEAM DRUM	---	
LIC -403	VT-403	STEAM DRUM LEVEL	---	
PIC -403	VT-402	OFF-GAS COMPRESSURE DISCHARGE PRESSURE	---	
TJI -403	HE-403	OFF-GAS COOLER GAS IN & OUT TEMPS	---	
PI -404	FN-401	OFF-GAS BLOWER SUCTION PRESSURE	---	
AIC -601	FR-601	EXCESS OXYGEN FROM REGEN FURANCE HTG	---	
BTUC-601	FR-601	SALT BTU HEAT INPUT CONTROLLER REGEN FUR.	---	
DTT -601	FR-601	SALT TEMP DELTA-T IN REGEN FURNACE SECT.	---	
FT -601	FR-601	SALT FLOW TO REGEN FURNACE BAKING SECT.	---	
HIC -601	VT-601	SPENT CARBON STORAGE TANK LEVEL	---	
II -601	VT-605	REGEN CARBON STORAGE TANK AGITATOR AMPS	---	
LI -601	VT-601	SPENT CARBON STORAGE TANK LEVEL	---	
PI -601	ED-601	SPENT CARBON SLURRY DISCH. PRESSURE	3	
TIC -601	FR-601	REGEN FURNACE PRODUCT OUT TEMPERATURE	---	
TJI -601	FR-601	FURNACE TEMPERATURE	---	
WI -601	VT-605	REGENERATED CARBON PRODUCT MASS RATE	10	
AI -602	FR-602	CO CONC IN REGEN FURNACE HTG SECTION	---	
FIC -602	FR-601	AIR FLOW TO REGEN FURNACE	---	
HIC -602	VT-602	FEED TANK CONTROL TO DEWATERING SCREW	---	
II -602	VT-602	SPENT CARBON FEED TANK AGITATOR AMPS	---	
LI -602	VT-602	SPENT CARBON FEED TANK LEVEL	---	
PIC -602	ED-602	REGENERATED CARBON EDUCTOR DISCH PRESS.	9	
TIC -602	FR-601	REGEN FURNACE HEAT SECTION TEMPERATURE	---	
TJI -602	VT-604	QUENCH TANK TEMP	---	
FIC -603	FR-601	FUEL FLOW TO REGEN FURNACE	---	

NOTES:

PROJECT: SOLAR FUELS & CHEMICAL STUDY
CUSTOMER: BABCOCK & WILCOX CO.
CUSTOMER JOB NO: P.O. # 710655JC
PLANT: SOLAR/CARBON
LOCATION: UNKNOWN

SUMMARY

INSTRUMENT LOOP SUMMARY LIST

REV	BY	DATE	REVISION

SHEET 6 OF 6

SPEC.NO.	REV#
SUMMARY	2

CONTRACT	DATE:
710655JC	02-05-86

REQ. P.O. ESR# P419-100

BY	CHK'D	APPR.
RA	RA	RA

LOOP NO.	EQUIP NO.	SERVICE	STREAM I.D. NO.	REMARKS
LI -603	VT-603	WATER STORAGE TANK LEVEL	---	
TIC -603	FR-601	REGEN FURNACE BAKING SECTION TEMP OUT	---	
TJI -603	VT-606	WATER STORAGE TEMPERATURE	---	
FIC -604	FR-601	STEAM FLOW TO REGEN FURNACE	---	
HIC -604	VT-605	REGEN CARBON STORAGE TANK LEVEL	---	
LIC -604	VT-604	QUENCH TANK LEVEL	---	
TIC -604	FR-601	REGEN FURNACE DRYING OUTLET TEMP	---	
TJI -604	HE-601	WATER COOLER COOLING MEDIA OUTLET TEMP	---	
FIC -605	VT-606	MAKE-UP WATER TO WATER STORAGE TANK	13	
LI -605	VT-605	REGEN CARBON STORAGE TANK	---	
TIC -605	HE-602	OFF-GAS HEATER OUTLET TEMP	17	
FI -606	TW-601	SCRUBBER WATER TO WASTE TREATMENT	---	
LIC -606	VT-606	WATER STORAGE TANK LEVEL	---	
TIC -606	HE-601	WATER COOLER OUTLET TEMPERATURE	---	
FI -607	VT-601	PURGE WATER FROM PRODUCT TO WASTE TREAT.	14	
LI -607	DC-601	DUST COLLECTOR SOLIDS LEVEL	---	

NOTES:

2.7.2 Solar Heat Transport Subsystem Operation and Control Strategy

The solar heat transport subsystem provides the great majority of energy input for the operation of the chemical process subsystem in the form of hot molten carbonate salt. In addition, this subsystem provides a portion of the process steam requirements for the activation and regeneration processes and generates electricity for plant power and for export. The operation of this subsystem is integrated with the chemical process subsystem operation to meet energy input demands of the chemical process. The solar heat transport subsystem fluid flow paths, instrumentation, and control loops are shown on Black & Veatch Piping and Instrument Diagrams M2000 and M2001 (Figures 2-15 and 2-16).

2.7.2.1 Start-Up

Start-up proceeds from the shutdown mode in which the subsystem is not operating and, for the most part, is at ambient temperature. All components are drained of salt with the exception of the hot and cold carbonate salt storage tanks, the carbonate salt make-up sump tank, and the nitrate salt sump tank. These components are maintained at approximately the normal cold salt operating temperature to prevent freezing of salt. The shutdown mode is used for a relatively long outage period such as that associated with a scheduled maintenance outage. In the event maintenance is required on a salt holding tank, the tank can be drained and cooled to ambient. The carbonate salt storage tanks were sized such that the entire inventory can be stored in one tank.

Start-up is initiated by energizing the heat trace on all carbonate salt and nitrate salt components and piping to heat the system up to the low temperature standby mode. Heat-up of the fossil fired salt heater is accomplished with a very low burner firing rate. The receiver aperture door remains closed; the receiver heat absorption panels are not heated. Salt remains in the holding tanks during this phase of start-up. Heat-up of the water/steam system is accomplished using the 300kw start-up heater. Water is recirculated through the start-up heater, the evaporator, and the steam drum using the boiler water circulation pump. When the water temperature reaches $100^{o}C$ ($212^{o}F$), the steam drum vents are closed, the steam/water system pressure begins to increase, and the steam generated flows to the superheater and the condenser. The energy input rates on the heat tracing and the start-up heater are co-ordinated to increase temperatures throughout the subsystem at approximately the same rate to reach the low temperature standby mode.

In the low temperature standby mode, all salt piping and components have been heated to approximately the normal cold nitrate salt operating temperature of 304°C (580°F), and the steam generator pressure is at approximately the normal operating saturation pressure of 8.27 MPa (1200 psia). At low temperature standby, nitrate salt circulation is initiated through the system; system temperatures are sufficiently in excess of the nitrate salt freezing point of 245°C (473°F).

Start-up proceeds to the normal standby mode by continuing to heat carbonate salt components and piping with heat trace. Nitrate salt system component temperatures and water/steam system pressure are maintained using nitrate salt component heat trace and the start-up heater as required, although as heating of the intermediate heat exchanger proceeds, heat input to the nitrate salt from the intermediate heat exchanger should be sufficient to maintain the nitrate salt above its freezing point throughout the loop and to maintain steam system pressure. The heat-up of the fossil fired salt heater continues at a low burner firing rate.

In the normal standby mode all salt piping and components, with the exception of the receiver panels, have been heated to approximately normal cold carbonate salt temperatures of 514°C (957°F). At this point carbonate salt can be pumped through the heated components and piping without concern for salt freezing or thermal shock. Start-up can then proceed to the normal operating mode.

Depending on the time of day and solar insolation conditions, either the solar receiver or the fossil fired heater can be brought on-line. If the receiver is to be used, the aperture door is opened, and an array of warm-up heliostats is focused on the heat absorption panels to warm them to the cold carbonate salt temperature.

The receiver subsystem is then filled with cold carbonate salt from the cold salt storage tank; salt is circulated with the cold salt booster pump through the receiver and back to the cold salt storage tank. Upon completion of receiver fill, power input to the receiver from the heliostat field and salt flow rate through the receiver are adjusted to ramp the receiver salt outlet temperature up to normal hot salt temperature of 954°C (1750°F). Accumulation of a inventory of hotter salt can be started in the hot salt storage tank.

If the fossil fired salt heater is to be brought on-line at the normal standby mode, salt flow is established from the cold salt booster pump, through the heater and back to the cold salt storage tank. Burner firing rates and the salt flow rate through the heater are adjusted to ramp the heater salt outlet temperature up to normal hot salt temperature of 954°C (1750°F). Accumulation of an inventory of hotter salt can be started in the hot salt storage tank.

Chemical process subsystem start-up, as described in Section 2.7.1.1, proceeds in parallel with the solar heat transport subsystem start-up. After carbonate salt flow has been established in either the the solar receiver or the fossil fired salt heater and the chemical process furnaces have been preheated, cold carbonate salt flow can be introduced through the furnaces and the intermediate heat exchanger through the cold salt start-up line upstream of the activation furnace. Salt temperature to the furnaces can be gradually increased as required for furnace start-up by mixing salt flow from the hot salt storage tank with flow from the cold salt start-up line until all flow to the furnaces comes from the hot salt storage tank at the normal hot salt temperature and the chemical plant has reached normal operating conditions.

2.7.2.2 Normal Operation

During normal operation, the solar heat transport subsystem provides the energy input to the molten carbonate salt for chemical process and steam generator operation on a 24 hour-a-day basis from either the solar receiver or the fossil fired heater. Because the receiver has been sized with a power rating in excess of the power rating by the chemical process and steam generator, the system can accumulate stored energy in the hot salt storage tank. This energy can be used to maintain process operation during periods of reduced solar insolation or to delay the time at which the fossil fired salt heater is brought on-line.

Following is a typical clear day operating scenario for the solar heat transport subsystem for a 24 hour period. During this 24 hour period the chemical plant and the steam generator are operating at rated load. The status of the collector field, receiver, salt heater, and hot salt storage tank level throughout the 24 hours period is described below and is summarized on Table 2-42.

Period 1 of the day is a short period of time near sun-up when the collector field is brought to a standby condition in anticipation of starting the receiver. The receiver overnight circulation system is operating with the aperture door closed to keep the receiver at approximately the cold carbonate salt temperature. The fossil fired salt heater is operating at rated load, and the hot salt storage tank level is constant at low operating level.

During period 2 the receiver is taken out of the overnight circulation mode, and the normal flow path through the receiver is established. The aperture door is opened, and the collector field is used to warm up the receiver. The receiver salt outlet temperature is ramped up to the normal hot salt temperature. Receiver outlet flow is either returned to the cold salt storage tank or sent to the hot salt storage tank, depending on its temperature. The salt heater continues to operate at rated load. The hot storage tank level remains essentially constant, as the flow from the receiver during this period is relatively insignificant.

As time period 3 begins, sufficient insolation is available for the heliostat field to power the receiver at minimum load. As the insolation increases during period 3, receiver load increases and, therefore, the flow from the receiver to hot storage tank increases. The salt heater continues to operate at rated load during this period, so all the hot salt flow from the receiver goes into building storage in hot salt tank, where the level increases.

TABLE 2-42

Typical Clear Day, 24 Hour Operating Scenario

	Status			
Time Period	Collector Field	Receiver	Salt Heater	Hot Salt Storage Tank Level
1	Standby	Overnight Circulation	Operating	Constant
2	Warming	Start-up	Operating	Constant
3	Heating	Operating	Operating	Increasing
4	Heating	Operating	Standby	Increasing or Decreasing
5	Stowed	Overnight Circulation	Standby	Decreasing
6	Stowed	Overnight Circulation	Warm-up	Decreasing
7	Stowed	Overnight Circulation	Operating	Constant

Time period 4 begins when the receiver can supply sufficient energy to both fill the remaining storage capacity and operate the chemical plant and steam generator. The fossil fired heater is placed in standby. The level in the hot storage tank will be increasing or decreasing at various points during period 4 depending on whether the receiver power is greater than or less than the chemical process and steam generator requirements.

At the start of time period 5, insolation levels have dropped below the minimum required to operate the receiver. The collector field is stowed, and the receiver is placed in the overnight circulation mode with the aperture door closed. The salt heater remains in standby as the hot salt remaining in storage is used to power the process.

The fossil fired heater is warmed up during time period 6 in anticipation of the remaining salt storage in the hot tank being depleted. Cold salt is pumped to the salt heater, and the heater outlet temperature is ramped up to the normal hot salt outlet temperature. Salt heater outlet flow is either returned to the cold salt storage tank or sent to the hot salt storage tank, depending in its temperature. The depletion rate of the hot salt tank is essentially unaffected by this operation.

For the remainder of the 24 hours, time period 7, the process is supplied with energy from the salt heater. The hot salt storage tank level remains constant at low level, and the receiver is maintained in overnight circulation.

The foregoing normal operation scenario can be basically applied to partly cloudy day operation although the relative times of receiver operation and of salt heater operation have to be adjusted commensurate with the occurrence of the cloud conditions. Overall, partly cloudy day operation results in more fossil fired salt heater operation. For totally cloudy days, the plant is operated solely on the fossil fired salt heater in the mode described for time period 7 above.

2.7.2.3 Shutdown

Shutdown of the system from normal operation to the normal standby mode requires providing cold carbonate salt to the chemical furnace inlet for mixing with the carbonate salt from the hot salt storage tank to gradually reduce the temperatures of the furnaces as described in Section 2.7.1.3. Both the receiver and the salt heater are placed in a standby mode with salt circulating at the cold salt temperature. When all the carbonate salt temperatures in the system have been reduced to approximately the normal cold carbonate salt temperature, all carbonate salt is drained to the salt tanks. Any active heat trace on carbonate salt components and piping is de-energized (except on the hot and cold storage tanks and make-up salt sump tank) to permit cooldown.

Circulation of nitrate salt continues to permit cooling of the intermediate heat exchanger, thereby reducing the temperature of the salt at all locations in the loop to approximately the normal cold nitrate salt temperature. Reducing the salt temperature prior to draining avoids any thermal shock to components, piping, or the nitrate salt pump which might otherwise occur. Any active heat trace on the nitrate salt components and piping is de-energized (except in the sump tank) to permit cooldown.

The steam generator boiler water circulation pumps continue to circulate water through the evaporator and steam drum as cooldown proceeds to ambient conditions. Any steam generated flows to the condenser through the superheater.

2.7.2.4 Abnormal Operating Sequences

Abnormal operating sequences differ from the normal operating modes discussed in the above sections in that they generally occur in response to a failure of equipment to perform its assigned function and as such they occur infrequently and often the response must be rapid. Generally, this means that the abnormal sequences are detected and executed automatically by the control system. The abnormal sequences generally follow the general pattern of:

1) Fault detection;
2) Self trip;
3) Related system trip where appropriate;
4) Restart or secure;
5) Repair as required;
6) Checkout

A failure modes analysis of the subsystem was not performed to identify all the potential abnormal operating sequences, to specify fault-detection methods, and to specify the actions required to secure the failed equipment. In general, the solar heat transport subsystem abnormal sequences would be similar to those which have been outlined for solar-powered electrical generation plants, and the fault detection and control system responses would be similar to those of an electrical generation plant.

2.7.2.5 Control Loops

The controlled parameters in the solar heat transport subsystem and the controlling elements, generally valves, are shown on the Black & Veatch Piping and Instrument Diagrams M2000 and M2001 (Figures 2-15 and 2-16). Following are brief descriptions of the major control loops in the subsystem.

The carbonate salt temperature exiting the east and west zones of the receiver is controlled independently by controlling the inlet salt flow to each zone. A control algorithm which uses both incident flux on the receiver and back tube temperatures at various locations, as well as salt outlet temperature, is used to adjust salt flow as required to maintain constant salt outlet temperature with changing incident flux conditions.

The receiver cold surge tank level (and therefore tank pressure) is maintained constant by controlling the flow from the cold salt booster pumps with the valve in the riser piping. This assures pump flow is equal to flow through the receiver. The receiver hot surge tank level is maintained constant by controlling flow to the hot salt storage tank, thus assuring flow to the hot storage tank is equal to the receiver flow.

Carbonate salt flow through the fossil fired salt heater is controlled such that it is equal to the hot salt flow demand of the chemical process. The salt outlet temperature from the salt heater is maintained constant by control of the the fossil fuel and combustion air supplied to the burners.

The flow requirement of the cold carbonate salt booster pump is matched by flow from the cold salt storage tank to the pump sump tank by maintaining a constant sump tank level. The flow requirement for the hot salt transfer pump is controlled in the same manner.

As discussed in Section 2.3.4, cold carbonate salt flow is mixed with salt flow from the outlet of the chemical process to establish acceptable carbonate salt-to-nitrate salt temperature differences in the intermediate heat exchanger. The flow of this cold carbonate salt is adjusted, as required by changes in outlet flow from the chemical process, to maintain the outlet temperature of the carbonate salt from the intermediate heat exchanger. A change in the carbonate salt flow to the intermediate heat exchanger effectively represents a load change on the heat exchanger, to which the nitrate salt flow responds by maintaining constant outlet nitrate salt temperature from the intermediate heat exchanger.

As discussed in Section 2.3.4, the inlet nitrate salt to the evaporator is maintained at a temperature less than 454°C (850°F) to permit the use of 2 1/4 Cr - 1 Mo material to fabricate the evaporator. The temperature of the nitrate salt exiting the superheater is reduced by attemperation with cold nitrate salt upstream of the evaporator inlet. The evaporator inlet temperature is maintained by control of the cold nitrate salt attemperation flow.

The steam delivery temperature to the turbine is controlled by attemperating superheater outlet steam with saturated steam from the steam drum. The steam generator pressure is maintained by adjusting the steam flow through turbine inlet valve. Feedwater flow is controlled to match steam flow by maintaining a constant water level in the steam drum. Flow of condensate from the condenser hotwell is controlled equal to the steam generator feedwater requirements by maintaining a constant level in the deaerator.

Extraction steam flow from the turbine is used both in the chemical process and in the deaerator. Steam to the chemical process is supplied from a header whose steam sources are the turbine extraction steam and the steam drum, VT-403, in the activated carbon process (Olin Drawing No. B&W-P419-9102-D). The steam supply header pressure is controlled as shown on the previously noted Olin drawing; the required supply header steam temperature is maintained by controlling the flow of turbine extraction steam to the header. The flow of extraction steam to the deaerator is controlled to maintain deaerator pressure.

2.7.3 Plant Control System

The plant control system consists of a master control system and collector field control system. The master control system is a distributed digital control system that directly monitors and controls the chemical process subsystem and the solar heat transport subsystem. The collector field control system is a separate, distributed digital control system that controls the field of heliostats. A digital link between the collector field control system and the master control system provides the capability for the master control system to send commands to the field of heliostats during automatic sequences such as start-up and shutdown. A schematic of the basic plant control system structure is shown on Figure 2-58.

Digital control system techniques are required to implement the receiver outlet temperature control algorithm. The heliostat control system also requires digital techniques to calculate the sun vector, transmit the sun vector over data buses to the individual heliostats, and calculate the required heliostats gimbal angles based on the sun vector and target (i.e., receiver) vector. Digital control offers advantages in the areas of the operator interface, ease of incorporating redundance, and self-testing for fault isolation and improved maintainability.

The master control system provides closed-loop controllers required for all controlled parameters in the solar heat transport and chemical process subsystems. Sequencing and interlock logic are also provided in the master control system for automatic sequencing (e.g. receiver start-up) and for response to abnormal operating sequences. The master control system also supplies a data acquisition, storage, and retrieval capability. Operator interface with the master control system is provided through CRT terminals, function switches, keyboards, graphics displays, visual and audible alarms, and printed logs.

Plant Control System Block Diagram

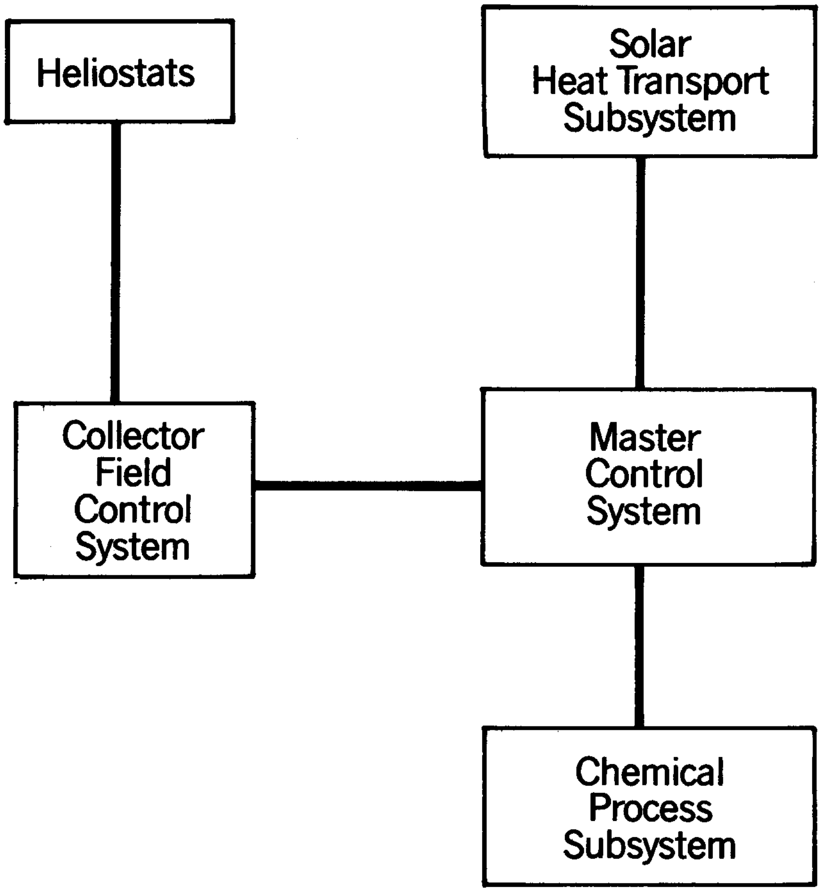

Figure 2-58

2.8 Overall System Performance

2.8.1 Overview

Overall system performance was evaluated both on an instantaneous basis at the plant rated power design point and on an annual basis. Specific characteristics considered in evaluating the plant performance were the solar-to-thermal efficiencies, chemical process and regeneration energy input requirements, system thermal losses, plant electrical demands, process material input requirements, activated carbon and regenerated carbon production, by-product gas and tar production, and electrical energy production.

2.8.2 Design Point Performance

The overall system performance was evaluated on an instantaneous basis at the plant rated power design point. Because the plant is a 24 hour-a-day operation, both the solar receiver and the fossil fired salt heater have a rated power design point; a design point performance analysis was prepared for each. The solar receiver design point was defined as winter solstice (day 355) at solar noon with an insolation level of 950 W/m^2. The fossil-fired salt heater design point is not related to any particular day or solar conditions.

Based on the design point solar-to-thermal efficiency stairstep discussed in Section 2.4.4, the absorbed power in the molten carbonate salt in the solar receiver is 41.8 MW (142.7 x 10^6 Btu/hr). Pumping power results in a total power input to the salt of 42.07 MW (143.63 x 10^6 Btu/hr). This power is distributed in the three chemical reaction furnaces, the off gas heater, the steam generator, and in system thermal losses. In addition to this power distribution to the process, 6.85 MW (23.4 x 10^6 Btu/hr) goes to thermal storage. The molten salt power balance based on the receiver design point is summarized on Table 2-43.

The power and material flow requirements based on the receiver design point are summarized on Table 2-44. In addition to the power from the molten salt flow, fossil fuel input is required for a portion of the regeneration process and for the ammonia incinerator. Fossil fuel is also burned to maintain the salt heater in a standby condition. Power input for all operating electrical equipment is listed as are raw material flow rates for the production and regeneration of activated carbon. The revenue-producing power and material outputs for the process at the design point are tabulated on Table 2-44.

TABLE 2-43

Molten Salt Power Balance
Based on Receiver Design Point

Power Input to Salt			Power Output From Salt		
	10^6 Btu/hr	MW		10^6 Btu/hr	MW
Solar Receiver	142.7	41.8	Chemical Furnaces		
Pumps	0.93	0.27	Process Requirement	51.57	15.11
			Thermal Loss	2.16	0.63
			Off Gas Heater	3.70	1.08
			Steam Generator	58.30	17.08
			Calculated Thermal Losses	1.49	0.44
			Margin for Unaccounted Thermal Loss	3.01	0.88
			Total to Process	120.23	35.22
			To Storage	23.40	6.85
Total	143.63	42.07	Total	143.63	42.07

TABLE 2-44

Receiver Design Point
Power and Material Flow Summary

Input

Molten Salt Power, MW (10^6 Btu/hr)		
Solar	34.95	(119.3)
Pumps	0.27	(0.93)
Total	35.22	(120.23)
Fossil Fuel Power, MW (10^6 Btu/hr)		
Regeneration Furnace		
Process Requirement	1.69	(5.76)
Thermal Loss	0.19	(0.64)
Ammonia Incinerator	0.29	(1.00)
Regen. Process Incinerator	1.76	(6.00)
Salt Heater (Standby)	0.11	(0.38)
Total	4.04	(13.78)
Electrical Power, MW (10^6 Btu/hr)	1.80	(6.14)
Coal, kg/sec (lbm/hr)	1.64	(13,000)
Pitch, kg/sec (lbm/hr)	0.182	(1444)
75% H_3PO_4, kg/sec (lbm/hr)	0.019	(147)
30% HCl, kg/sec (lbm/hr)	0.041	(327)
Spent Carbon*, kg/sec (lbm/hr)	0.483	(3837)

* Includes 0.138 kg/sec (1095 lbm/hr) of adsorbent.

Output

Activated Carbon, kg/sec (lbm/hr)	0.410	(3250)
Regenerated Carbon, kg/sec (lbm/hr)	0.328	(2604)
Tar, kg/sec (lbm/hr)	0.320	(2543)
By-Product Gas, MW (10^6 Btu/hr)	30.64	(104.6)
Electrical Power, MW (10^6 Btu/hr)	3.0	(10.24)

A similar analysis for the fossil fired salt heater design point has been prepared. The salt heater has a design point power essentially equal to the process requirements because the heater is not designed to add any energy to storage. Pumping power input is somewhat reduced because of the lower head-flow requirements associated with the salt heater as compared to the receiver. The molten salt power balance for the salt heater design point is shown on Table 2-45.

The power and material flow requirements based on the salt heater design point are summarized on Table 2-46. Fossil fuel input to the salt heater accounts for the power required for the salt and for the losses due to heater inefficiency. The remainder of the fossil fuel input is essentially the same as on Table 2-44. Power input for operating electrical equipment is estimated slightly higher for the salt heater design point as compared to the receiver design point because of the power consumption of the salt heater forced draft and induced draft fans. The raw material inputs and the revenue - producing power and material outputs are the same for both the receiver and the salt heater design points.

2.8.3 Annual Energy and Product Production Projection

The overall system performance was evaluated on an annual basis to estimate the plant's raw material and energy input requirements and its revenue-producing product and energy output. This information is an important consideration in performing the economic assessment of plant.

Preliminary market forecasts and economic assessments were made in the proposal phase to establish a plant capacity for design and economic evaluation. On that basis, a plant designed for a yearly output of 11,340,000 kg (25,000,000 lbm) of virgin activated carbon and 9,070,000 kg (20,000,000 lbm) of regenerated activated carbon was selected as reasonable for the 1995 time frame. On the basis of production rates of 0.410 kg/sec (3250 lbm/hr) for virgin activated carbon and 0.328 kg/sec (2604 lbm/hr) for regenerated carbon, the plant operates the equivalent of 320 days per year (7680 hr/year) at rated load. Of the remaining 45 days (1080 hr) in the year, 14 days (336 hr) are allocated to scheduled maintenance outage with the other 31 equivalent days (744 hr) given over to lost production due to occurrences such as forced

TABLE 2-45

Molten Salt Power Balance
Based on Fossil Fired Salt Heater Design Point

Power Input to Salt			Power Output From Salt		
	10^6 Btu/hr	MW		10^6 Btu/hr	MW
Fossil Fired Salt Heater	119.30	34.95	Chemical Furnaces		
			Process Requirement	51.57	15.11
			Thermal Loss	2.16	0.63
Pumps	0.40	0.11			
			Off Gas Heater	3.70	1.08
			Steam Generator	58.30	17.08
			Calculated Thermal Losses	1.49	0.44
			Margin for Unaccounted Thermal Loss	2.48	0.72
			Total to Process	119.7	35.06
			To Storage	0	0
Total	119.70	35.06	Total	119.7	35.06

TABLE 2-46

Fossil Fired Salt Heater Design Point
Power and Material Flow Summary

Input		
Molten Salt Pump Power, MW (10^6Btu/hr)	0.11	(0.40)
Fossil Fuel Power, MW (10^6 Btu/hr)		
Salt Heater		
Input to salt	34.95	(119.3)
Losses	7.15	(24.4)
Regeneration Furnace		
Process Requirement	1.69	(5.76)
Thermal Loss	0.19	(0.64)
Regen. Process Incinerator	1.76	(6.00)
Ammonia Incinerator	0.29	(1.00)
Total	46.03	(157.1)
Electrical Power, MW (10^6 Btu/hr)	1.85	(6.31)
Coal, kg/sec (lbm/hr)	1.64	(13,000)
Pitch, kg/sec (lbm/hr)	0.182	(1444)
75% H_3PO_4, kg/sec (lbm/hr)	0.019	(147)
30% HCl, kg/sec (lbm/hr)	0.041	(327)
Spent Carbon*, kg/sec (lbm/hr)	0.483	(3837)

* Includes 0.138 kg/sec (1095 lbm/hr) of adsorbent

	Output	
Activated Carbon, kg/sec (lbm/hr)	0.410	(3250)
Regenerated Carbon, kg/sec (lbm/hr)	0.328	(2604)
Tar, kg/sec (lbm/hr)	0.320	(2543)
By-Product Gas, MW (10^6 Btu/hr)	30.64	(104.6)
Electrical Power, MW (10^6 Btu/hr)	3.0	(10.24)

maintenance outages, start-ups, and shutdowns. Energy and production estimates were made for each of these three periods to determine the annual estimate.

During the scheduled maintenance outage, the plant is shut down. Electrical energy input is required to maintain the salt storage tanks above salt freezing temperature and for general plant "hotel" load. This electrical power load was estimated at 0.225 MW, or 75.6 MWh for the period (Table 2-47).

For the other 31 equivalent days of lost production, energy input requirements were estimated based on maintaining the plant in a standby mode. Fossil fuel and electrical energy are required to maintain plant components at standby temperatures and to supply general plant "hotel" load. For the period, the fossil fuel energy was estimated at 291 MWh (992×10^6 Btu) and the electrical energy was estimated at 372 MWh.

To determine the required fossil fuel energy input during the equivalent 320 days of rated load production, the solar contribution to the total energy requirements was estimated. As described in Section 2.4.4, the annual solar energy absorption capacity of the receiver is 88,000 MWh ($300{,}300 \times 10^6$ Btu). This available energy is reduced by 14/365 to account for loss of solar input during the scheduled outage. It should be noted that in a more detailed study, this outage could be planned for a period when the expected solar input would be less than average, thereby making more efficient use of the total annual solar energy available. The lost production period of 31 equivalent days is assumed to occur randomly on both a daily and yearly basis. For the purpose of estimating loss of solar energy input, one-half of the solar energy on 31 days in deducted from the annual total. The resulting net annual solar energy contribution is 80,890 MWh ($276{,}100 \times 10^6$ Btu). The balance of energy input to the molten salt during the equivalent 320 days is supplied by fossil fuel through salt heater operation. Additional fossil fuel energy input is also required to operate those portions of the plant which are powered continuously by fossil fuel and for periods of salt heater standby.

Electrical energy and raw material input as well as revenue-producing product and energy output for the equivalent 320 days of rated load operation are based on the rates from Tables 2-44 and 2-46. A summary of these annual inputs and outputs is shown on Table 2-47. Based on the annual plant electrical demand of 14,540 MWh and the gross electrical output from the cogeneration portion of the plant of 23,040 MWh, the plant produces an annual net energy of 8,500 MWh for export to the utility grid. The fossil fuel requirements of 256,600 MWh (875,900 x 10^6 Btu) exceed the energy content of the by-product gas, requiring an annual purchase of the equivalent of 21,300 MWh (72,700 x 10^6 Btu) of fossil fuel.

TABLE 2-47

Annual Energy and Product Production Projection

	Scheduled Outage (336 hr)	Lost Production (744 hr)	Rated Load Operation (7680 hr)	Annual (8760 hr)
Input				
Solar, MWh				80,890
(10^6 Btu)				(276,100)
Fossil fuel, MWh		291	256,300	256,600
(10^6 Btu)		(992)	(874,900)	(875,900)
Electricity, MWh	75.6	372	14,090	14,540
(10^6 Btu)	(258.0)	(1270)	(48,090)	(49,630)
Coal, kg			45,280,000	45,280,000
(lbm)			(99,840,000)	(99,840,000)
Pitch, kg			5,029,000	5,029,000
(lbm)			(11,090,000)	(11,090,000)
75% H_3PO_4, kg			512,500	512,500
(lbm)			(1,130,000)	(1,130,000)
30% HCl, kg			1,139,000	1,139,000
(lbm)			(2,512,000)	(2,512,000)
Spent Carbon, kg			13,370,000	13,370,000
(lbm)			(29,480,000)	(29,480,000)
Output				
Activated Carbon, kg			11,350,000	11,350,000
(lbm)			(24,960,000)	(24,960,000)
Regenerated Carbon, kg			9,070,000	9,070,000
(lbm)			(20,000,000)	(20,000,000)
Tar, kg			8,857,000	8,857,000
(lbm)			(19,530,000)	(19,530,000)
By-Product Gas, MWh			235,300	235,300
(10^6 Btu)			(803,200)	(803,200)
Electricity, MWh			23,040	23,040
(10^6 Btu)			(78,640)	(78,640)

3.0 ECONOMIC ASSESSMENT

An economic assessment of the solar powered fuels and chemicals plant was performed to determine internal rates of return as a function of fuel/feedstock and product price escalation. Plant operating costs and capital costs were estimated and used to determine rates of return for both a solar plant and a fossil fueled chemical plant. In addition, a market forecast was performed to project future demand and supply of granular activated carbon. Sections of the economic assessment are as follows:

- 3.1 Operating Costs
- 3.2 Capital Costs
- 3.3 Market Forecast
- 3.4 Evaluation of Data
- 3.5 Areas for Potential Cost Reduction
- 3.6 Conclusions

3.1 Operating Costs

3.1.1 Power Plant

The power plant cost estimate consists of two primary elements:

1. Variable Costs
   - Fuel

2. Fixed Costs
   - Operating Labor
   - Operating Consumables
   - Maintenance Labor
   - Maintenance Materials and Consumables

Operating costs in Table 3-1 are based on staffing, materials, and supplies requirements for the Arizona Public Service Repowering Plant (Reference 40) (Saguaro Power Plant).

Operating labor costs were determined from the plant staffing in Table 3-2.

TABLE 3-1

POWER PLANT ANNUAL OPERATION AND MAINTENANCE EXPENSES

(costs in thousands of dollars)

Variable Costs	
Fuel	240
Fixed Costs	
Operating Labor(16 x $35,000)	560
Maintenance Labor (10 x $35,000)	350
Maintenance Materials and Contracts	
Materials	113
Contracts	47
Operating Consumables	
Salt Replacement (5%/yr)	59
Miscellaneous Supplies	5
Total Fixed Costs	1134
Total Power Plant O&M Costs	1374

TABLE 3-2

DAILY POWER PLANT STAFFING

Day Shift (0600 - 1400 hrs.) and Evening Shift (1400 - 2200 hrs.)

- Supervisor
- Collector Field Operator
- Receiver - Furnace - Storage Operator
- Steam Generator - Turbine Operator

Night Shift (2200 - 0600 hrs.)

- Supervisor
- Furnace - Storage - Operator
- Steam Generator - Turbine Operator

Total Staffing to Account for Weekend Coverage and Vacations

- 4 Supervisors
- 4 Collector Field Operators
- 4 Receiver - Furnace - Storage Operators
- 4 Steam Generator - Turbine Operators

16

These costs consist of the wages, overheads, and benefits associated with the personnel required to control and operate the power plant.

Operating consumables include material costs for heliostat washing, chemical analyses, and plant operation, as well as replenishment of the plant salt supply. In the absence of experience in salt degradation and replacement requirements in a closed system at high temperatures, a contingency for makeup salt requirement of 5% of the initial salt inventory has been included in this account resulting in an annual expense of $59,000.

Maintenance labor, and materials and contract costs are based on estimates in the Saguaro Report. Maintenance consists of scheduled maintenance (e.g., inspections, valve and pump repacking, calibrations, lubrication, cleaning, etc.) and unscheduled corrective maintenance. Maintenance labor costs include a 10-man staff with an annual cost of $350,000. Maintenance materials are for repair and replacement of failed equipment, as well as those materials used during scheduled maintenance activities.

Maintenance service contracts are for the receiver elevator and the master control computers. In addition, a salt maintenance contract will be required to maintain the carbonate salt at a purity fit for this application.

3.1.2 Chemical Plant

The chemical plant cost estimate in Table 3-3 consists of the following elements:

1. Variable Costs
   - Raw Materials
   - By-product credits
   - Utilities
2. Fixed Costs
   - Operating Labor
   - Fringe Benefits
   - Maintenance Labor
   - Maintenance Materials and Contracts
   - Operating Supplies
   - Plant Overhead

Raw material, by-product, and utility consumptions were formulated from information found in the literature. These consumptions represent expected usage based on the process described using a western-grade subbituminous coal. Laboratory and pilot tests using candidate raw materials would be required to confirm and refine these estimates. Costs for operating labor were developed from a proposed plant staffing. Maintenance costs and maintenance labor are calculated based on the capital cost estimate using industry standards and experience. Factors for maintenance costs and overhead rates are industry averages and are used by SRI International's Process Economics Program.

3.1.2.1 Raw Material Pricing

Raw material prices for coal, coal tar pitch, phosphoric acid and hydrochloric acid were obtained by Olin's purchasing group. After researching the western coal market with the proposed raw material specifications, the search was narrowed into 4 regions, based primarily on the required ash content:

1. Wyoming
2. Western Colorado
3. Eastern Colorado
4. Northeast New Mexico

TABLE 3-3

CHEMICAL PLANT ANNUAL OPERATION AND MAINTENANCE EXPENSES

(cost in thousands of dollars)

Activated Carbon Production	
Variable Costs	
Raw Materials	
Coal	2196
Coal Tar Pitch	1846
Phosphoric Acid (75%)	339
Hydrochloric Acid (30%)	151
Total Variable Costs	4533
Fixed Costs	
Operating Labor (33 personnel)	1186
Fringe Benefits (20% of labor)	237
Maintenance Labor (3% of capital costs)	1158
Maintenance Material and Contracts	1158
Operating Supplies (10% of operating labor)	119
Plant Overhead (80% of all labor)	2047
Total Fixed Costs	6025
Total Production Costs - Activated Carbon	10558
Regeneration of Spent Carbon	
Operating Labor (5 personnel)	214
Fringe Benefits (20% of operating labor)	43
Total Production Costs - Regenerated Carbon	257
Total Chemical Plant O&M Costs	10695

Table 3-4 is a summary of the coals investigated. The coal from Pittsburgh and Midway Coal Mining Company was chosen as the basis for raw material costs. This is based primarily on lowest ash content (2.5 - 3.5%) and qualities close to the desired specifications. One manufacturer of activated carbon is currently using this coal as their raw material. The cost is $44/ton delivered to Barstow, CA (dry basis).

Coal tar pitch is produced from the by-products of coking operations. The volatiles formed from the coking operation are condensed to form tar. From this material, pitch can be produced to meet various customer specifications. These specifications include softening point, xylene or toluene insolubles, quinoline insolubles, coking value and ash content. Table 3-5 contains a summary of costs, specifications and typical analyses. Coal tar pitch from Reilly Tar and Chemical Corporation was chosen as the basis for raw material costs based on lowest cost. Also at least two activated carbon manufacturers use this particular pitch in their operations.

Phosphoric acid and hydrochloric acid are available from the Los Angeles area and their prices are as follows:

75% H_3PO_4	$600T/del
30% HCl	$120T/del

3.1.2.2 By-product Credit

Credit for by-product tars is based on the energy content (or heating value). These tars have a heating value of approximately 9.69 kWh/kg (15,000 Btu/lb). At $\$3.30/10^6$ Btu, these tars are worth $99/ton.

3.1.2.3 Operating Labor

Operating labor is based on the proposed plant staffing as presented on Tables 3-6 and 3-7. Salaries for operators are based on costs developed by S.R.I. International's Process Economics Program. An hourly wage of $17.69/hour includes a 10% shift overlap. Other salaries are based on typical industry rates. A breakdown of the labor between production of activated carbon and the regeneration of spent carbon is provided in order to obtain separate production costs for each.

3.1.2.4 Maintenance Labor and Materials

The maintenance labor costs are based on the capital cost estimates for the chemical process subsystem. The factor used was 3% of the capital cost estimate.

Based on historical data and industry standards plants will use maintenance materials and contracts valued at an amount equal to the maintenance labor costs.

3.1.2.5 Operating Supplies

Operating Supplies includes all other direct charges:

- Miscellaneous Supplies (charts, lubricants, etc.)
- Safety Supplies

A factor of 10% of operating labor was used to estimate these costs.

3.1.2.6 Plant Overhead

Plant overhead includes all other departments required to successfully operate the plant. This includes:

- Medical
- Safety and Loss Prevention
- Training
- Plant Security
- Industrial Hygiene
- Traffic
- Environmental Compliance
- Personnel
- Warehousing and Stores
- Purchasing
- Plant Management
- Plant Communication

A factor of 80% of all labor was used to estimate plant overhead costs.

TABLE 3-4
COST ANALYSIS OF COAL FOR ACTIVATED CARBON PRODUCTION

Supplier & Location	Preparation	Typical Quality as received dry wt. %			Major Mineral Components of Ash (Typical wt. %)						Price FOB^b $/Ton Trans^a	Price FOB^b $/Ton Del.	$/Ton Del. (Dry Basis)
					SiO_2	Al_2O_3	Fe_2O_3	CaO	SO	Other			
Pittsburgh & Midway													
Coal Mining Co.		Moist.	18-20	---									
Kemmerer Mine SW WY	Strip	Vol.	35-39	46	42	21	2	13	14	MgO-5	$22/T		
#1 Seam		F.C.^c	38-43	51								$39/T	$44/T
90 Mi. W. of Rock	Raw	S^d	0.4	0.5							$17/T rr		
Springs, WY		Ash	2.5-3.5	3-4									
Kaiser Coal Co.		Moist.	7.5	---									
Sunnyside Mine Utah	Underground	Vol.	36.5	39.5	55	24	6	5	3		$27/T		
60 mi SW Provo, UT		F.C.	50	54								$55/T	$57/T
	Washed	S	0.65	0.7							$28/T rr		
		Ash	6.3	6.8									
Kaiser Coal Co.		Moist.	7.5	---									
York Canyon Mine	Underground	Vol.	34	37	45	25	8	9	5		$32/T		
Raton, NM		F.C.	51	55								$60/T	$63/T
160 mi. NE of	Washed	S	0.45	0.5							$28/T rr		
Albuquerque NM		Ash	7.4	8									
Peabody Coal Co.		Moist.	10	---									
Seneca Mine NW CO	Strip	Vol.	35	39	58	26	4	4	3	K_2O-1.3	$19/T		
25 Mi W Steamboat		F.C.	45	50								$54/T	$56/T
Springs	Raw	S	0.5	0.55							$35/T rr		
		Ash	9.7	10.8							2 line haul		
Peabody Coal Co.		Moist.	26	---									
Powder River Mine, WY	Strip	Vol.	31	42	33	15	6	23	12	Na-2	$7/T		
50 Mi. E of Casper, WY		F.C.	36	48								$39/T	$41/T
	Raw	S	0.37	0.5							$32/T rr		
		Ash	5.2	7									
Walden Coal Co.		Moist.	15	---									
(Bourg)	Strip	Vol.	36	42	34	19	11	20	11	MgO-4	$16/T		
Walden Mine, CO		F.C.	42	49								$49/T	$52/T
100 mi NW Denver	Raw	S	0.3	0.35							$33/T rr		
		Ash	5.5	6.5									

a - Transportation by rail to Barstow, CA
b - Free on board
c - Fuel content
d - Sulfur

TABLE 3-5
COST ANALYSIS OF COAL TAR PITCH FOR ACTIVATED CARBON PRODUCTION
PRICE, SPECIFICATIONS, TYPICAL ANALYSES

Supplier Location		Softening Point °C	Toluene Insoubles TI %	Quinoline Insoubles QI %	Coking Value %	ASH %	Price ($/Ton) FOB^a	Tran	Total
Reilly Tar & Chemical Corp. Provo, UT	ASTM	D3104	D3671 (XI)	D2318	D2416	D2415			
	Spec.	110-115	28% min	10-16	52% min	0.25 max	280	53	333
	Typical	112.3	31.6%	13.1	55.7	0.2			
Koppers Chicago, IL	ASTM	D3104	D4072 (TI)	D2318	D2416	D2415			
	Spec.	120-125	28% min	8-13	57% min	0.35 max	275	58	333
	Typical	122	30	10	59	0.20			
Allied Chemical Ironton, OH		up to 134°C		as needed			285	58	369
Reilly Tar & Chemical Corp. Provo, UT	ASTM	D3104	D3671	D2318	D2416	D2415			
	Spec.	130-135	32% min	12-18	58% min	0.4 max	310	53	363

a - Free on board

TABLE 3-6
PRODUCTION OF ACTIVATED CARBON OPERATING LABOR BREAKDOWN

Operators	20	$17.69/hr	2080 hrs.	$735,904
Production Foreman	4	$3500/mo	12 mos.	168,000
Production Supt.	1	$4000/mo	11 mos.*	44,000
Production Engineer	2	$3200/mo	11 mos.*	70,400
Production Clerk	1	$13/hr	1915 hrs.*	24,895
Lab Technician	4	$14/hr	1915 hrs.*	107,240
Chemist	1	$3200/mo	11 mos.*	35,200
			Subtotal	1,185,693
		Fringe Benefits @ 20%		237,128
		Total Operating Labor		1,422,767

• 8% of time on Regeneration of Spent Carbon

TABLE 3-7
REGENERATION OF SPENT CARBON OPERATING LABOR BREAKDOWN

Operators	4	$17.69/hr	2080 hrs.	$147,181
Production Foreman	1	$3500/mo	12 mos.	42,000
Production Supt.	1	$4000/mo	1 mo.*	4,000
Production Engineer	2	$3200/mo	1 mo.*	6,400
Production Clerk	1	$13/hr	165 hrs.*	2,145
Lab Technician	4	$14/hr	165 hrs.•	9,240
Chemist	1	$3200/mo	1 mo.*	3,200
			Subtotal	214,166
		Fringe Benefits @ 20%		42,833
		Total Operating Labor		256,999

* 92% of time on Production of Activated Carbon

3.2 Capital Costs

This project cost estimate includes all capital costs associated with the solar fuels and chemicals plant. Costs were accumulated using the Cost Data Management System (CDMS) (Reference 41) from Sandia National Laboratories. The total projected capital cost for the plant using 1985 base year dollars is $85,896,618.

Estimates for the plant are based on actual and estimated costs from previous contracts, vendor quotations, and catalog prices. Land costs of $12,000 per acre and a heliostat field cost of $60/square meter were assumed. This heliostat cost is based on long range goals for mass production of heliostats. Indirect costs for engineering services and construction management are assumed to be 20% of total direct costs for plant and equipment. Plant start-up costs are estimated to be $1,910,000 which include equipment checkout, testing, and start-up and operator crew training. Table 3-8 lists the major cost items. Tables 3-8a and 3-8b give a breakdown of the power generation system costs and the process plant systems/equipment costs. A more detailed list of costs is included in Appendix D.

TABLE 3-8

PLANT CAPITAL COST SUMMARY

		Dollars	%
0	Land	$ 3,735,200	4
1	Structures & Improvements	8,166,000	10
2	Power Generation System	32,868,963	38
4	Cogeneration Plant	2,869,655	3
5	Process Plant Systems/Equipment	24,557,800	29
9	Plant Level--Indirect Costs	13,699,000	16
Total Capital Requirement		$85,896,618	100

TABLE 3-8a

POWER GENERATION SYSTEM COSTS

		Dollars	%
2.1	Collector System	4,603,000	14.0
2.2	Receiver System	5,954,000	18.1
2.3	Thermal Transport System	7,777,950	23.7
2.4	Thermal Storage System	2,636,819	8.0
2.5	Control/Electrical System	5,601,800	17.0
2.6	Steam Generation System	1,645,741	5.0
2.7	Salt Heater	4,649,610	14.2
Total		32,868,920	100.0

TABLE 3-8b

PROCESS PLANT SYSTEMS/EQUIPMENT COSTS

		Dollars	%
5.1	Regeneration Process	2,348,000	9.6
5.2	Activation Process	9,479,200	38.6
5.3	Waste Water Treatment	315,000	1.3
5.4	Carbonization Process	6,450,700	26.3
5.6	Coal Handling Equipment	3,596,000	14.6
5.9	Misc. Plant Systems/Equipment Costs	2,368,900	9.6
Total		24,557,800	100.0

3.3 Market Forecast

Within a "most likely case" environment of underutilized capacity in 1995 and 2000, it appears that in order for a solar granular activated carbon (GAC) plant to gain meaningful market penetration, it would probably have to be the lowest cost producer by a significant margin in order to dampen the effects of the strategies and tactics of existing competitors having the inertia of a significant market presence and a history of service expertise.

In turn, being the lowest cost producer is dependent on a number of factors, not the least of which is the highly unpredictable future worldwide energy outlook, which, of course, is intertwined with the future political climate. Any scenario which projects skyrocketing oil and gas prices would obviously greatly increase the attractiveness of a solar GAC plant versus a conventional natural gas fueled plant. However, at this point in time, most political and economic "experts" forecast a relatively stable energy outlook through 1995, thus making solar produced GAC more of a cost-effective uncertainty.

Table 3-9 is a summary of the 1983 U.S. supply and demand for activated carbon. The U.S. demand for granular activated carbon (GAC) is projected to grow at an average annual rate of 5.6% through 1988 and then slow to a long-term growth rate through the year 2000 of approximately 3%, which also represents the long-term real growth potential of the overall U.S. economy. This equates to 130 million pounds of GAC in 1988, 160 million pounds in the anticipated project startup year of 1995, 185 million pounds in the year 2000 and 215 million pounds in 2005.

Granular activated carbon appears to be at a relatively mature stage along its product life cycle. It has a few short-term potential high growth markets (groundwater treatment, wastewater treatment, solvent recovery and air purification), but a long-term future fraught with enough uncertainty to diminish annual growth expectations to the most likely case rate of 3%. Some of the presently unanswered questions which have spawned this considerable long-term uncertainty are as follows:

1. Will hoped for increased environmental legislation actually occur? When? To what extent will it impact GAC end-use markets and the use of GAC within these markets?

2. What effects will technological innovation have on granular activated carbon? Will it remain the most cost-effective "best available technology" within its end-use markets or will product substitution by new evolving technologies occur (i.e. membranes)?

3. Will improved, more efficient regeneration techniques result in higher turnover/reuse rates and reduce demand for virgin GAC? Will new improved powdered activated carbon (PAC) regeneration techniques make PAC cost-effective enough to displace GAC in some markets?

4. What will be the impact of foreign manufacturers on U.S. markets? Even if U.S. market demand grows at a rate faster than anticipated, will U.S. manufacturers maintain market share or will foreign competition take away market share?

5. Perhaps most importantly, what indeed will the worldwide energy situation be like during the plant startup year of 1995?

These key factors skew the probabilities toward a relatively conservative market demand forecast. At present, there are still too many big "question marks" to be very optimistic regarding the future domestic demand for granular activated carbon.

TABLE 3-9

VIRGIN ACTIVATED CARBON SUPPLY/DEMAND SUMMARY: UNITED STATES

ALL ACTIVATED CARBON - 1983
(Millions of Pounds)

Capacity*	348
Production	210
Imports	18
Exports	34
Consumption	194

Capacity Utilization = 60%

GRANULAR ACTIVATED CARBON (GAC) - 1983

Producer	GAC Estimated Annual Capacity* (Millions of Pounds)	GAC Estimated Market Share (Percent)
Barneby-Cheney	7	4
ICI Americas 1	30	15
CECA, Inc.	25	12
Calgon Carbon Corp.	100	50
The Carbon Company	3	2
Witco	10	5
Westvaco	25	12
TOTAL ESTIMATED GAC CAPACITY	200	100%

* Also estimated capacity as of January, 1985.

1 Being purchased by Norit NV, Netherlands, as of June, 1985

3.3.1 Product Description

To a degree much greater than most chemicals, activated carbon derives its significance from its role as a part of a system, rather than as a raw material. It is a substrate on which certain materials are deposited during a purification or extraction reaction. Generally, activated carbon undergoes no chemical change or consumption in the usual sense. It is a true "processing chemical". It is nearly unique among industrial chemicals in that it can be reused many times before disposal.

Activated carbons are important because of their adsorptive properties. The most significant physical characteristic of activated carbon is the enormous surface area of the internal pore structure developed during its manufacture. Total surface areas for activated carbons commonly range from 450 to 1,800 square meters per gram.

Although surface area and adsorption are interrelated, surface area alone is not always a satisfactory measure of the adsorptive capacity of a given carbon for a specific adsorbate. The distribution of pore volume as a function of pore size is also important, since steric effects tend to control the access and selectivity of adsorbate molecules to the internal surfaces of the carbon.

Activated carbons have the ability to selectively adsorb certain materials from a body of fluid, either gas or liquid. It is manufactured in two forms: granular (GAC) and powdered (PAC). In general, GAC is used for all gas-vapor phase adsorption systems and for the liquid phase applications where continuous adsorption processes can be used. PAC is favored for those liquid phase applications where batch adsorption processes are used. Powdered carbons are generally mixed with the liquid to be treated and then removed by filtration or settling.

The activated carbon business is divided into two parts: (1) virgin carbon production, (2) carbon regeneration. The regeneration involves the expulsion of the adsorbed material from the surface and subsequent reactivation of the adsorption surfaces.

Most regeneration processes are designed to treat granular activated carbon (GAC). Historically, the availability of technology to regenerate GAC (usually via thermal techniques) has favored the selection of GAC over PAC even though GAC can cost two or three times more than PAC. However, recent technical innovations to regenerate PAC are reversing the trend to some extent in favor of the lower cost PAC.

At low carbon-usage rates, thermal regeneration and reuse of granular carbon is not economical. Since powdered carbon is generally less expensive than granular carbon, operating costs with powdered carbon may be lower. However, at high carbon-usage rates, granular carbon is generally used because it can be regenerated economically. But with powdered regeneration techniques becoming increasingly more commercially acceptable, powdered carbon is now being consumed annually in quantities similar to granular carbon. Table 3-10 lists the grades, properties, and prices of powdered and granular activated carbon currently on the market.

TABLE 3-10

SELECTED GRADES, DESCRIPTION OF PROPERTIES, AND PRICES OF ACTIVATED CARBONS

	Powdered			Granular
Brand Name	DARCO S-51	Nuchar SA	Aqua Nuchar	Witcarb JXC 4/6 (pellets)
Manufacturer	ICI Americas Incorporated	Westvaco Corporation	Westvaco Corporation	Witco Chemical
Moisture: The percent by weight of water adsorbed on a carbon expressed as maximum percent	-	-	-	2%
Price Effective Date Fob Point	 11/84 Marshall, TX	 11/84 Covington, VA	 11/84 Covington, VA	 11/84 Fostoria, OH
Price per Largest Quantity	$.043/pound, truckload, unit load 2,000 pounds	$0.54/pound, bulk truckload lots	$0.37/pound bulk truckload lots	$1.58/pound truckload 40,000 pound

TABLE 3-10

SELECTED GRADES, DESCRIPTION OF PROPERTIES, AND PRICES OF ACTIVATED CARBONS

	Granular (continued)				
Brand Name	DARCO Granular	Nuchar WV-B 10 x 25	Calgon BPL	Calgon SGL	Witcarb
Manufacturer	ICI Americas Incorporated	Westvaco Corporation	Calgon Corp.	Calgon Corp.	Witco Chemical Corporation
Moisture: The percent by weight of water adsorbed on a carbon expressed as maximum percent	12%	-	2%	2%	1%
Price					
Effective Date	11/84	11/84	11/84	11/84	11/84
Fob Point	Marshall, TX	Covington, VA	Catlettsburg, KY	Catlettsburg, KY	Petrolia, PA
Price per Largest Quantity	$1.05/pound, truckload, unit load 2,000 pounds	$1.05/pound, truckload	$1.61/pound 4 x 10 $1.48 6 x 16 $1.37 12 x 30 30,000 pounds or more	$0.96/pound 8 x 30, 30,000 pounds or more	$0.80/pound 30,000 pounds or more

SOURCE: Trade Literature

3.3.2 Historical Perspective

Slower than expected growth for activated carbon in drinking water purification has resulted in disappointment for a number of producers. In the latter part of the 1970's, it had been forecast that consumption of activated carbons, particularly granular activated carbons (GAC), would experience growth of 9-10% per year over the long term. The basis for these forecasts was the tentative proposals made by the Environmental Protection Agency (EPA) with regard to the preferred method for removal of suspected carcinogenic trihalomethanes (THM) such as chloroform and other chlorinated hydrocarbons from drinking water supplies. Estimates of a market for 300 million pounds of granular activated carbons by the end of the 1980's were widely publicized based on these EPA proposals. In addition to drinking water purification, tentative proposals for removal of organic contaminants from municipal wastes and industrial effluents contributed to the forecasts. The use of activated carbons for solvent recovery to reduce emissions was also forecast to be a rapidly growing market over the long term.

As a result of the optimistic long-term outlook, a number of producers expanded capacity while new producers prepared to enter the market by acquiring new businesses or building new plants. However, as technical, economic and legal obstacles increased, delaying imposition of the proposed EPA regulations for drinking water treatment, demand slumped and long-term expectations were significantly altered, with producers becoming disillusioned.

It became apparent that the original EPA proposals were handicapped by formidable obstacles that had to be overcome before the proposals could be implemented into final regulations. Municipal water treatment operators strongly objected to the high cost of GAC treatment after it was determined the EPA had underestimated capital and operating costs. Legal challenges against the need for GAC treatment were subsequently upheld by the courts. These challenges exist to the present time and are not expected to be resolved for several more years.

Except for gas phase solvent recovery applications and the emergence of groundwater treatment as a new and a potentially fertile future end-use market, overall demand for activated carbons in other end-uses has been lackluster over the past several years. Municipal and industrial wastewater treatment, which also had been thought of as a potential high growth market, has not expanded as anticipated as a result of slower than expected imposition of regulations regarding pretreatment of industrial effluents. Sugar decolorizing, historically the largest end-use market for activated carbons, has been impacted by declining production of domestic sugar and increased imports.

A detailed list of activated carbon consuming end-use markets and their respective historical 1980 and 1983 demands is given in Table 3-11. A more detailed discussion of the uses and applications of activated carbon is presented in Appendix E. A short-term forecast of U.S. demand for activated carbon is presented in Table 3-12.

TABLE 3-11

U. S. DEMAND FOR VIRGIN ACTIVATED CARBON: A HISTORICAL PERSPECTIVE

(Millions of Pounds)

	1980			1983			A.G.R (%)
END-USE MARKET	GAC	PAC	TOTAL	GAC	PAC	TOTAL	80-83
LIQUID PHASE							
o Sugar Decolorizing	16	35	51	12	30	42	-0.6
o Drinking Water	10	30	40	7	25	32	-0.7
o Groundwater	--	--	--	4	--	4	HIGH
o Wastewater	18	3	21	17	6	23	3.0
o Others [1]	19	27	46	23	29	52	4.0
SUBTOTAL	63	95	158	63	90	153	-1.0
GAS PHASE							
o Automotive	8	--	8	8	--	8	0.0
o Cigarettes	3	--	3	2	--	2	-12.5
o Solvent Recovery	5	--	5	9	--	9	21.5
o Air Purification	7	2	9	8	2	10	3.5
o Others [2]	10	2	12	9	3	12	0.0
SUBTOTAL	33	4	37	36	5	41	3.5
TOTAL	96	99	195	99	95	194	0.0
MILLIONS OF $	--	--	--	85.6	54.7	140.3	

[1] Includes mining, pharmaceuticals, food processing, fats and oils, beverages, dry cleaning, electroplating, household uses and various chemicals process operations.

[2] Examples are gas masks and catalysts supports.

TABLE 3-12

U. S. DEMAND FOR VIRGIN ACTIVATED CARBON: SHORT-TERM FORECAST

(Millions of Pounds)

	1983			1988			A.G.R (%)
END-USE MARKET	GAC	PAC	TOTAL	GAC	PAC	TOTAL	83-88
LIQUID PHASE							
o Sugar Decolorizing	12	30	42	11	26	37	-2.5
o Drinking Water	7	25	32	9	26	35	-3.0
o Groundwater	4	--	4	8	--	8	15.0
o Wastewater	17	6	23	20	8	28	4.0
o Others [1]	23	29	52	26	32	58	2.0
SUBTOTAL	63	90	153	74	92	166	1.6
GAS PHASE							
o Automotive	8	--	8	9	--	9	2.5
o Cigarettes	2	--	2	1	--	1	-13.0
o Solvent Recovery	9	--	9	18	--	18	15.0
o Air Purification	8	2	10	16	4	20	15.0
o Others [2]	9	3	12	12	3	15	4.5
SUBTOTAL	36	5	41	56	7	63	9.0
TOTAL	99	95	194	130	99	229	3.4

[1] Includes mining, pharmaceuticals, food processing, fats, and oils beverages, dry cleaning, electroplating, household uses and various chemicals process operations.

[2] Examples are gas masks and catalysts supports.

3.3.3 Long-Term Forecast

Projecting U.S. demand for activated carbon beyond 1988 is extremely difficult since it is dependent on several very complex and interrelated factors such as environmental legislation, technological innovations, and energy scarcity.

For example, the primary end-use markets which offer the most significant opportunities for growth are (1) drinking water for taste and odor control as well as treatment of hazardous organic compounds, (2) groundwater contamination by volatile and non-volatile synthetic organic chemicals, (3) wastewater treatment (municipal and industrial) for removal of particulate matter as well as disinfection, and (4) solvent vapor recovery to reduce emissions of organic solvents into the atmosphere. These end-user markets are inextricably associated with environmental legislation covering air emissions, water contamination, and hazardous waste. Considering what has happened in the recent past regarding proposed EPA rulings regarding GAC use in drinking water and wastewater treatment, the most likely case scenario for future activated carbon demand should certainly not be heavily dependent of anticipated future legislative action that would spur very high growth rates. It is possible, but not highly probable across the spectrum of end-use markets.

In addition to the vagaries of anticipated future legislative action, another key to demand projections of granular activated carbon (GAC) is the concept of "best available technology". More economical, cost-effective means appear to have been found to remove trihalomethanes (THMs) from drinking water. The current trend in municipal wastewater treatment seems to be toward less costly processes without activated carbon. Even within the high growth gas phase end-use markets such as solvent recovery and air purification, although GAC appears to have a rosy short-term future, the probability of GAC remaining among the most cost-effective, "best available technologies" is uncertain beyond the foreseeable horizon.

For example, new applications for membrane technology have been flourishing in recent years. Many of the high growth gas phase GAC end-use markets could be vulnerable to substitution by membrane technology, perhaps not over the short term, but quite possible over the long term. Membrane Technology and Research, Inc. (Menlo Park, CA) under a contract with the U.S. Department of Energy's Idaho Operations Office, has developed a membrane process to recover organic solvents from waste gas streams. The process will be field tested at several plant sites early next year. MTR's president has stated that he believes this system "will be less expensive than alternative recovery methods such as activated carbon".

Another emerging technological change force has been the development of an increasing number of technologies for the regeneration of powdered activated carbon (PAC). This definitely does not bode well for GAC end-use markets where PAC can be substituted for GAC, given cost-effective regeneration economics.

Another big question mark is the future worldwide energy situation, which of course, is intertwined with the future political situation. Any scenario which projects skyrocketing oil and gas prices would increase the attractiveness of a solar GAC plant versus a natural gas fueled plant. However, at this point in time, most political and economic pundits forecast a relatively stable energy outlook through 1995, thus making solar produced GAC more of a cost-effective uncertainty. The probability of another major oil shock within this time frame is considered to be relatively low.

The "most likely" forecast for crude oil reflects a relatively stable environment for supply, demand and pricing. A rather complex but related collection of factors maintains the current stable situation. OPEC finally learns that disruption of the world economy via massive energy price increases only leads down the path to lower energy demand and a renewed vigor for conservation. The net result ... less income for OPEC. As in the past, Saudi Arabia exercises its role as the moderating influence, either through diplomacy or with the big stick, that is, with the threat to turn on the oil faucet and once more drive prices down.

This scenario assumes that OPEC members accept some measure of stability or even flatness in production quotas and prices through 1995.

Based on the discussion above, we believe it is reasonable to project that the "most likely" annual growth rate for granular activated carbon market demand beyond 1988 will be approximately 3.0%, which is the long-range growth potential of the overall U.S. economy. GAC appears to be in a relatively mature position along its product life cycle with a few short-term windows of opportunity, but also with considerable long-term uncertainty. Several scenarios of market demand based on various annual growth rates are presented in Table 3-13.

TABLE 3-13

U.S. DEMAND FOR GRANULAR ACTIVATED CARBON (GAC)

LONG-TERM FORECAST

Annual Growth Rate	1988	1995	2000	2005
1%	130	139	146	154
2%	130	149	165	182
3%*	130	160	185	215
4%	130	171	208	253
6%	130	195	262	350
8%	130	223	327	481

* Most likely scenario

3.3.4 Market Share Potential

The purpose of this evaluation is to project the relationship between the proposed solar plant production volume and the overall market demand.

At present, the U.S. capacity for activated carbon exceeds the demand by a considerable margin. Table 3-14 shows that in 1983 industry capacity was underutilized by 40%.

TABLE 3-14

U. S. Supply/Demand for All Activated Carbon - 1983

(Millions of Pounds)

Capacity*	348
Production	210
Imports	18
Exports	34
Consumption	194

Capacity Utilization = 60%

- Also estimated capacity as of January, 1985.

It is anticipated that the degree of underutilization will decrease to 30% in 1988, assuming no new producers, the same quantity of exports/imports and a 3.4% annual growth rate in U.S. demand.

Table 3-15 lists only the GAC producers, along with estimates of their GAC annual capacity and market share. A more detailed list of U.S. producers of all types of activated carbon is included in Appendix D. Additional tables concerning worldwide supply and demand for activated carbon are also shown in Appendix D.

The projection of capacity vs. demand is shown in Table 3-16 for the year 2000, which is five years after the proposed plant startup date of 1995.

TABLE 3-15

Estimated GAC Production Capacity and Market Share

Producer	GAC Estimated Annual Capacity (Millions of Pounds)	GAC Estimated Market Share (Percent)
Barneby-Cheney	7	4
ICI Americas*	30	15
CECA, Inc.	25	12
Calgon Carbon Corp.	10	50
The Carbon Company*	3	2
Witco	10	5
Westvaco*	25	12
TOTAL ESTIMATED GAC CAPACITY	200	100%

* These producers supply both GAC and PAC. Estimates of GAC capacity are based on communication with individuals within the industry.

TABLE 3-16

U.S. GAC Capacity Utilization in Year 2000

CASE I: Present Companies Only

Annual Growth Rate (%)	Projected Demand in Year 2000 (Millions of Pounds)	GAC Capacity (Millions of Pounds)	Capacity Utilization (%)
1	146	200	-27
2	165	200	-18
3*	185*	200	-8*
4	208	200	+4
6	262	200	+31
8	327	200	+64

CASE II: Present Companies Only Plus Solar/Chemical Plant

Annual Growth Rate (%)	Projected Demand in Year 2000 (Millions of Pounds)	GAC Capacity (Millions of Pounds)	Capacity Utilization (%)
1	146	225	-35
2	165	225	-27
3*	185*	225	-18*
4	208	225	-8
6	262	225	+16
8	327	225	+45

*Most likely scenario.

The table shows that, assuming no new producers or capacity increases beyond those existing today, the most likely capacity utilzation rates would range from -8% to -18%, depending on whether or not a solar plant is built. For the proposed startup year of 1995, the most likely capacity utilization rates would range form -20% to -29%, respectively.

Projecting market share is extremely difficult due to the large number of factors which impact the marketplace.

There are four main players in the market, with Calgon Carbon Company being the acknowledged leader. The activated carbon business appears to be essentially a "commodity specialty" or "specialty commodity" business with significant service components provided by the manufacturers. These service elements are very important and serve as a major point of differentiation among suppliers.

Within a probable environment of underutilized capacity in 1995 and 2000, for a solar GAC plant to gain meaningful market penetration, it would most likely have to be the lowest cost producer by a significant margin in order to dampen the effects of the strategies and tactics of existing competitors having a significant market presence and service expertise. In turn, being the lowest cost producer is also dependent on a number of factors, not the least of which is the highly unpredictable future energy outlook. Unless a lowest cost producer posture is achieved, market penetration will most likely be slow and difficult.

3.4 Evaluation of Data

3.4.1 Financial Analysis

3.4.1.1 Revenue Projections

Table 3-17 lists the plant production and revenue projections for the baseline operating strategy previously described. Production is assumed to be at full capacity for 20 years starting in 1995. The price of activated carbon is assumed to be $.93/lb which is an average of current prices for carbon of similar grade and moisture content. Regenerated activated carbon is assumed to be $.35/lb which is also based on current prices.

TABLE 3-17

ANNUAL PLANT PRODUCTION AND REVENUE PROJECTIONS

Product	Production	Unit Price	Revenue	%
Activated Carbon	11,319,728 kg	$2.05	$23,213,000	73
	(24,960,000 lbs)	($0.93)		
Regenerated Carbon	9,070,295 kg	$0.77	$ 7,000,000	22
	(20,000,000 lbs)	($0.35)		
Electricity	8,500,000 kwh	$0.06314	$ 537,000	2
By-Product Tars	8,859 m.ton	$109.18	$ 967,000	3
	(9,765 tons)	($99.00)		
Total Revenue			$31,717,000	

3.4.1.2 Rate of Return

The revenue projections and cost estimates discussed in the preceding sections are combined to produce an overall financial evaluation of the baseline case. Table 3-18 is a list of economic assumptions and values of variables used in the evaluation. Fuel/feedstock costs and product selling prices were assumed to escalate at the same rate. The results are presented in Table 3-19. The net present value has been calculated for discount rates of 5, 10, 12, and 15%. The internal rate of return is 11.0% for a 0% escalation rate and 14.9% for a 3% escalation. A complete financial spreadsheet for each escalation rate is shown in Appendix D. Figure 3-1 indicates that at an escalation rate of approximately .9% or greater, the rate of return exceeds the 12% hurdle rate for the chemical industry. In addition, Figure 3-2 shows the effect of cost reductions in the solar portion of the plant for escalation rates of 0% and 3%.

TABLE 3-18

ECONOMIC ASSUMPTIONS AND VARIABLES

Variable	Value	Description
General inflation rate	0%	All estimates calculated in real dollars assuming 0 inflation.
Capital cost escalation	0%	Capital costs assumed to not escalate in absence of inflation.
O&M cost escalation	0%	O&M costs assumed to not escalate in absence of inflation.
Fuel/feedstock cost escalation	0%,3%	Fuel costs assumed to escalate 0% or 3% in absence of inflation.
Product selling price escalation	0%,3%	Product selling price assumed to escalate at same rate as feedstock.
Construction cash flows	uniform	Cash flows occur uniformly throughout construction i.e., for 3-year construction, one-third of costs incurred in each year.
Base year for discounting	startup	All discounted cash flow calculations discounted to beginning of first-year plant operations (1995). All cash flows are assumed to occur at the end of each year.
Base year for prices	1985	All costs are given in 1985 dollars.
Plant construction time	3 yr	Representative of probable construction time for large solar installation.
Economic life	20 yr	Standard assumption for industrial project evaluation.
Depreciation life	5 yr	Current tax law for industrial investments in solar energy portion of plants.
	10 yr	Current tax law for industrial investment in conventional (process) portion of plants.

TABLE 3-18 (CONT.)

ECONOMIC ASSUMPTIONS AND VARIABLES

Variable	Value	Description
Depreciation schedule	ACRS	Current tax law.
Investment tax credit	10%	Current tax law.
Discount rate	5%,10%,15%	Assumed as the real after-tax cost of capital.
Property and other taxes	1%	Annual property and other tax payments.
Federal tax rate	46%	Current tax law.
State tax rate	8%	Representative value.
Working Capital	12%	Of total revenues.
Sales, General, and Administrative expenses	12%	Of total revenues.
Hurdle rate	12%	Typical of chemical industry.

Internal Rate of Return (IRR) vs. Escalation Rate for Baseline Solar Plant

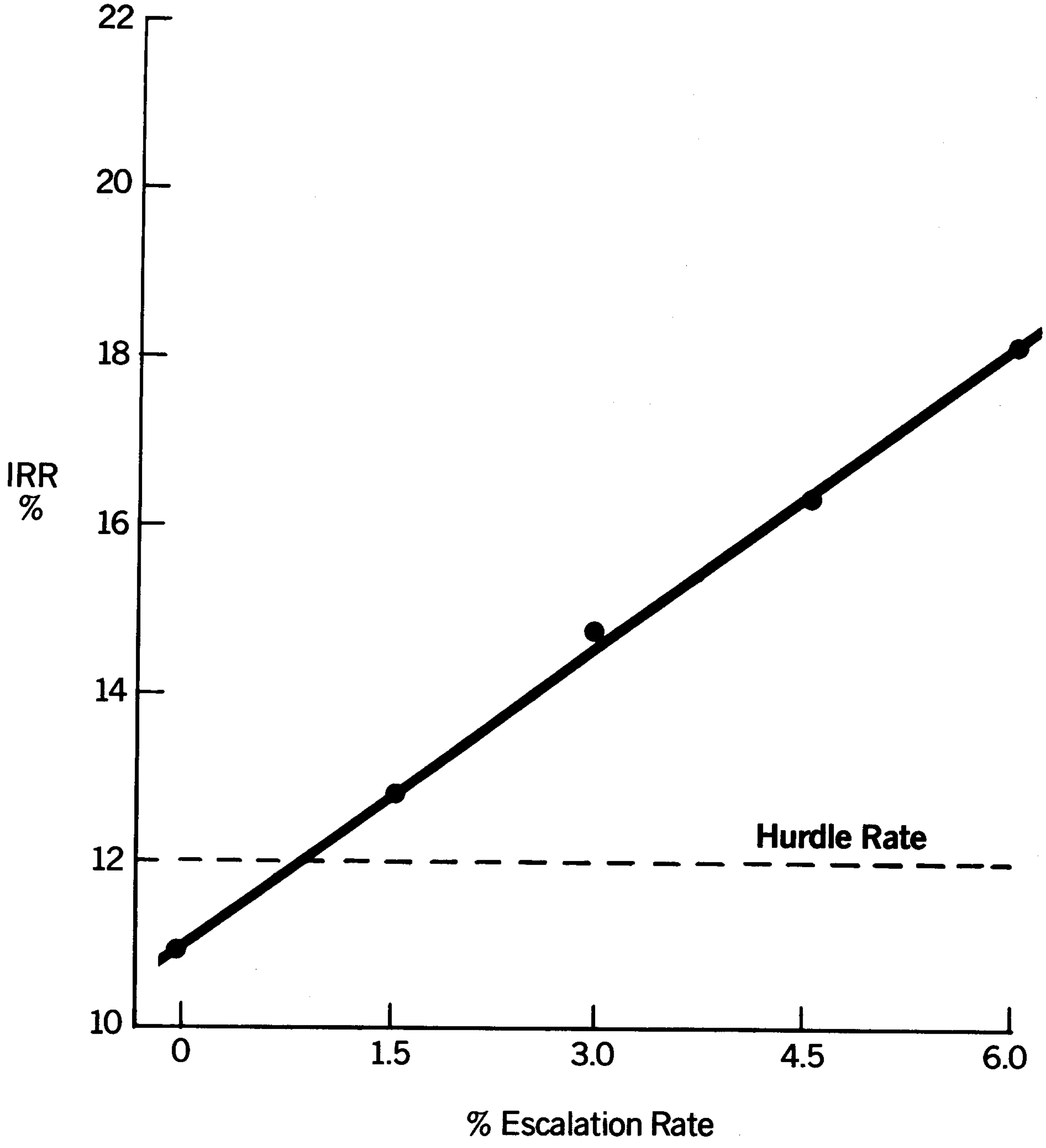

Figure 3-1

Internal Rate of Return (IRR) vs. Capital Cost Reduction in Solar Portion of Plant

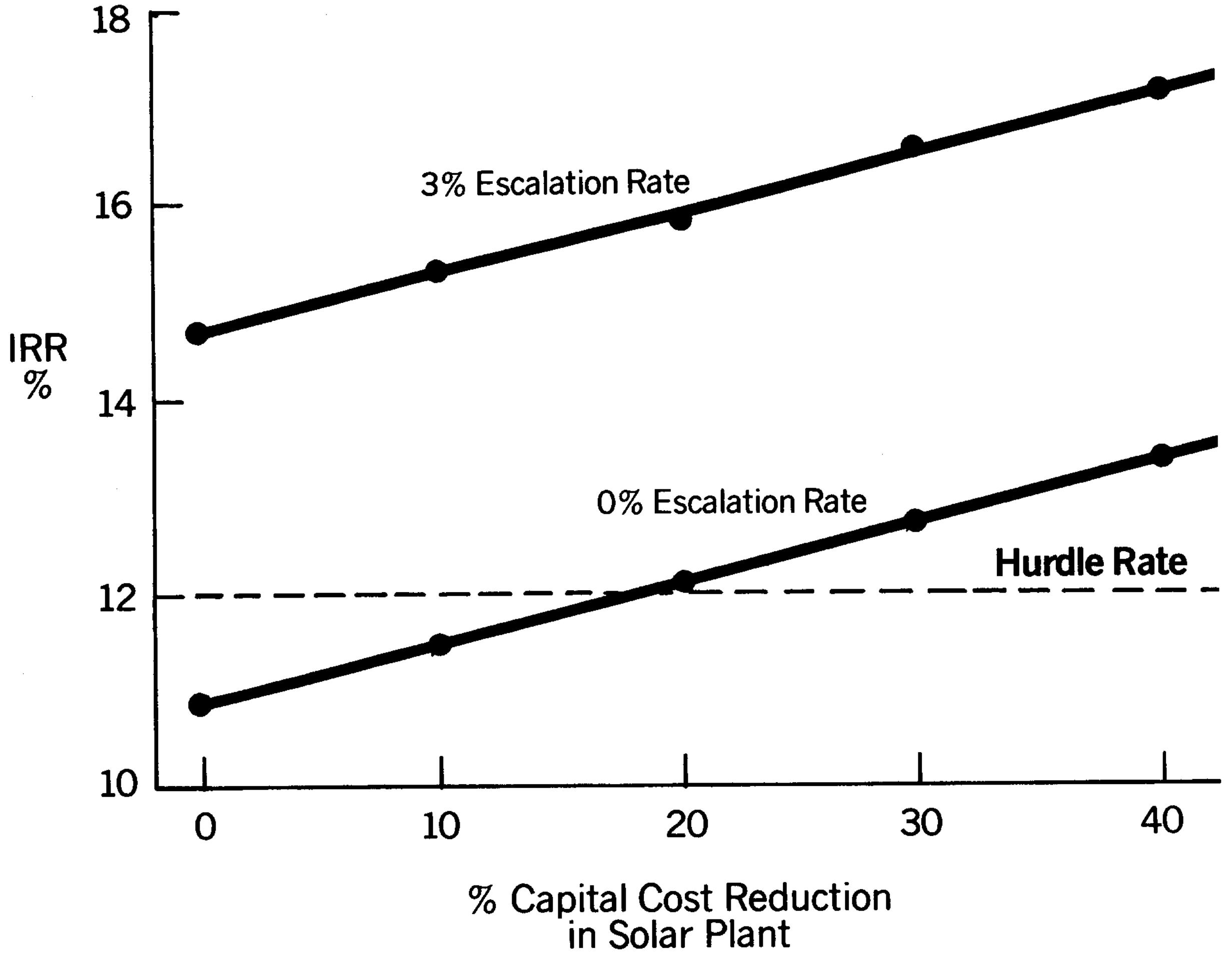

Figure 3-2

TABLE 3-19

FINANCIAL EVALUATION RESULTS - SOLAR PLANT

		Escalation Rate	
Net Present Value for		0%	3%
Discount rate of	5%	39,322	80,882
	10%	5,070	28,743
	12%	-4,195	15,148
	15%	-15,120	- 502
Internal Rate of Return		11.0%	14.9%

3.4.2 Comparison to Fossil Fueled Plant

A financial analysis was also made assuming the chemical plant was fueled by natural gas instead of solar energy. Capital costs were determined by subtracting all solar component costs as well as a major portion of land costs. We assumed no cogeneration and therefore, subtracted cogeneration plant and steam generation system costs. However, since process steam is needed for the chemical process, $400,000 for a gas boiler was added back in. For the chemical plant process systems/equipment, we assumed the costs of adding fans, drives, and air heaters would equal the deletion of plate coils in the furnaces.

In addition, all operation and maintenance costs for the solar portion of the plant were deleted. A complete financial spreadsheet for the fossil fueled chemical plant is shown in Appendix D. Another major change is that the gas plant is now using electricity rather than producing it as with the solar powered plant. Table 3-20 shows tha net present values calculated for discount rates of 5, 10, 12, and 15% using 0% and 3% escalation rates.

TABLE 3-20

FINANCIAL EVALUATION RESULTS - FOSSIL FUELED PLANT

		Escalation Rate	
Net Present Value for		0%	3%
Discount rate of	5%	61,540	98,085
	10%	29,151	49,225
	12%	20,885	37,018
	15%	11,259	23,129
Internal Rate of Return		20.1%	23.7%

Figure 3-3 shows a comparison of the internal rates of return for the solar powered plant and the fossil fueled plant.

In an effort to determine the escalation rate at which the solar powered plant would have a net present value equal to that of the fossil fueled plant, an analysis was performed using only relevant costs and revenues. The relevant costs and revenues are those that differ between the solar plant and fossil fueled plant. The net present values were calculated for a discount rate of 12% and are for comparison purposes only. The net present values calculated are negative because relevant costs are greater than relevant revenues. The results of this analysis are shown in Figure 3-4. A fuel and feedstock escalation rate of approximately 21% would be necessary for the baseline solar powered plant to be competitive with the fossil fueled plant. The other lines indicate the effect of reducing capital and operating costs for the solar portion of the plant. Over a large range of escalation rates, the fossil fueled chemical plant provides a better rate of return than the solar powered plant.

Internal Rate of Return (IRR)
vs. Escalation Rate

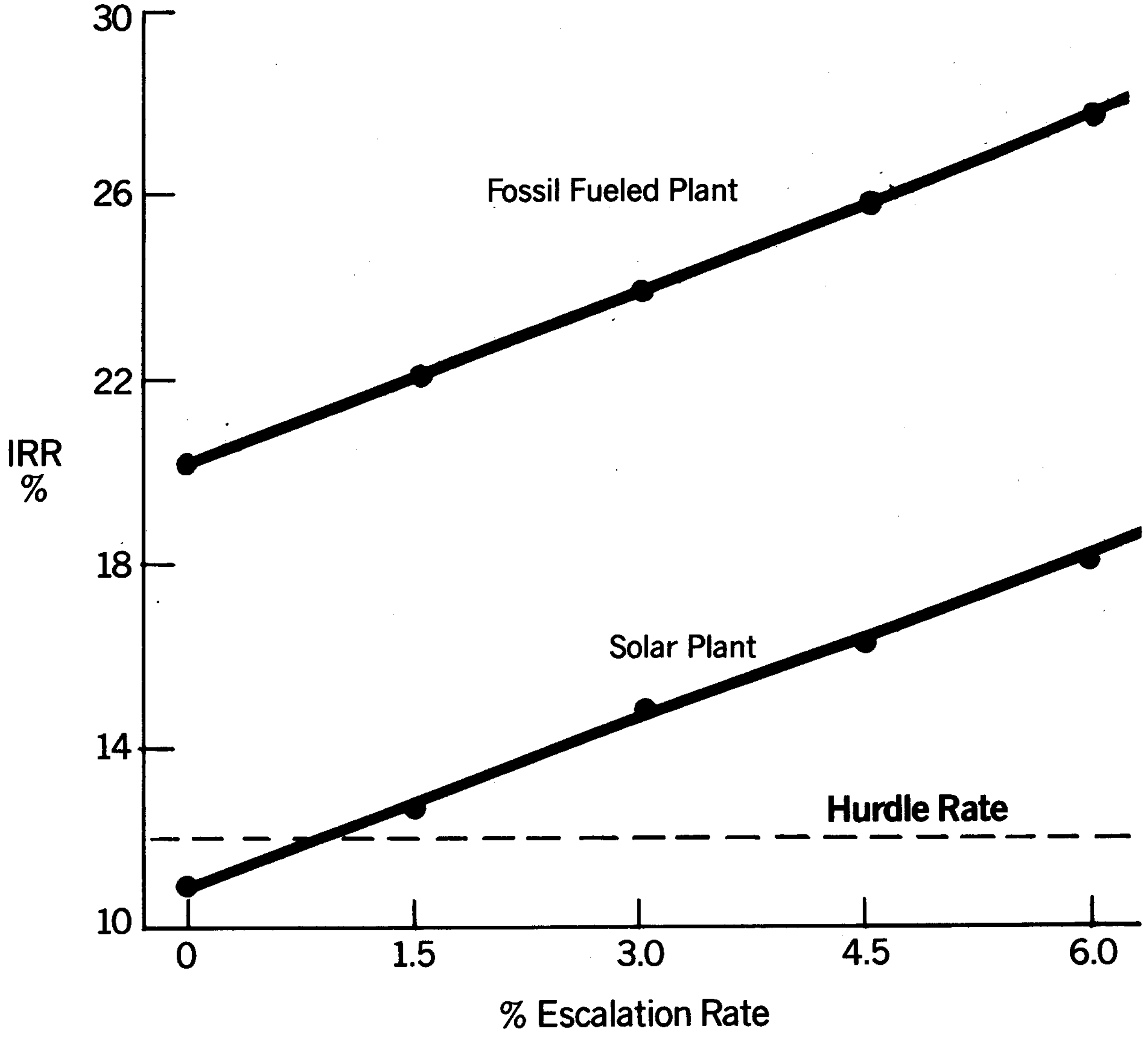

Figure 3-3

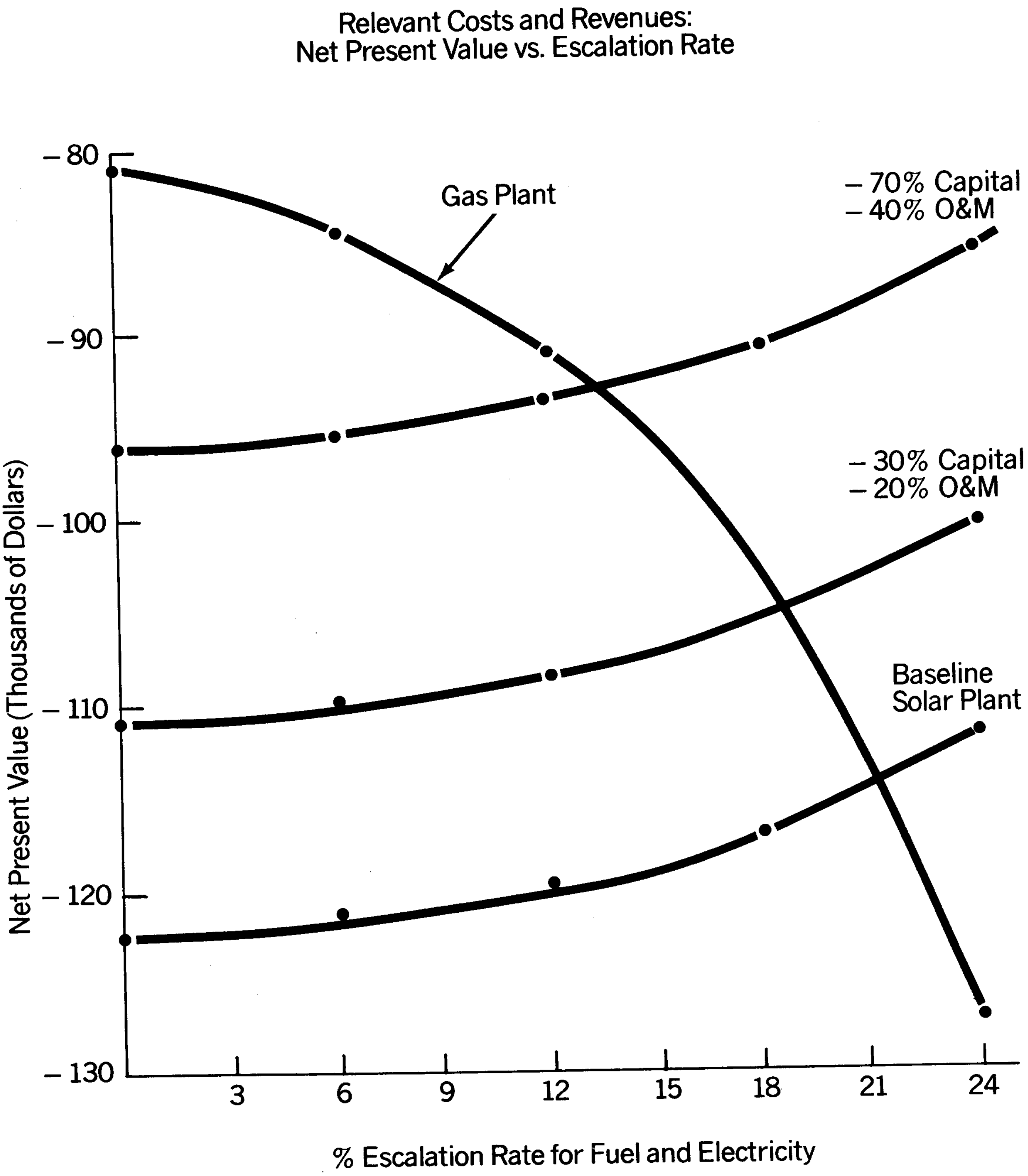
Relevant Costs and Revenues:
Net Present Value vs. Escalation Rate
Gas Plant
– 70% Capital
– 40% O&M
– 30% Capital
– 20% O&M
Baseline
Solar Plant
Net Present Value (Thousands of Dollars)
– 80
– 90
– 100
– 110
– 120
– 130
3
6
9
12
15
18
21
24
% Escalation Rate for Fuel and Electricity

Figure 3-4

3.5 Areas for Potential Cost Reductions

As pointed out in previous sections, a cost reduction in solar plant components is needed to make it competitive with other energy sources. To address this issue, we have first compared our component costs to those in the National Solar Thermal Technology Program's Five Year Research and Development Plan 1986-1990 (Reference 45) as shown in Table 3-21. Table D-12 in Appendix D shows the breakdown of our solar plant costs used in Table 3-21. Table 3-22 includes a description of the costs for component goals. Note that the estimated cost for our plant is in 1985 dollars where as costs for current technology and long-term goals are in 1984 dollars.

Total capital costs for our plant do not include the cogeneration plant, and steam generation system costs have been reduced accordingly. Plate coil costs for the chemical furnaces have been included in the "conversion" cost. The table indicates higher costs for our plant than for a "five year plan current technology" plant of the same size.

The difference in costs is apparently related to the high temperatures of our system. For instance, over 50% of our thermal transport costs are in the co-extruded piping for the salt booster system and salt transfer system. Another 20% of the cost is for valves in these two systems. Also, over half of the costs for "balance of plant" pertain to the control system for the solar process. The "storage" costs may be reduced by considering the high temperature molten salt thermal energy storage concept recently developed by Rockwell International's Rocketdyne Division, under contract to the Solar Energy Research Institute. Other component costs are roughly in line with the Five Year R&D Plan. The high cost of components can be reduced through material development for high temperature carbonate salt application. This subject is discussed in the development plan that follows.

TABLE 3-21

CENTRAL RECEIVER COMPONENT COSTS AND GOALS FOR PROCESS HEAT

	Solar Plant		Five Year R&D Plan 1986-90	
	% of Total	Estimated Costs* (1985 $)	Current Technology (1984 $)	Long-Term Goals (1984 $)
CONCENTRATORS	11.9	60/m^2	150/m^2	50/m^2
RECEIVERS	15.4	78/m^2	80/m^2	30/m^2
TRANSPORT	20.2	102/m^2	45/m^2	25/m^2
STORAGE	6.8	31/kWht	25/kWht	20/kWht
CONVERSION	5.4	59/kWt	50/kWt	40/kWt
BALANCE OF PLANT	15.0	76/m^2	65/m^2	20/m^2
SYSTEM	25.3	1095/kWt	800/kWt	270/kWt
TOTAL CAPITAL COSTS		38,340,000	28,000,000	9,450,000
OPERATION & MAINTENANCE		15/m^2-Yr	15/m^2-Yr	9/m^2-Yr
INTERNAL RATE OF RETURN (4.5% Fuel Escalation)		16.1%	17.7%	21.7%

* See Table D-12 in Appendix D

TABLE 3-22

DESCRIPTION OF AREAS FOR COMPONENT GOALS

Concentrators	All concentrator costs including field installation, power, and control wiring, field controllers.
Receivers	Receiver structural support (including towers in the case of central receivers), heat exchanger surfaces, cavity or cover glass, integral receiver controls.
Transport	Thermal transport includes piping, pumps, valves, surge and storage tanks, transport media. Electric transport (for dishes) includes field wiring of engines.
Storage	Storage tanks, insulation, storage circulation equipment, storage control system, storage medium, storage heat exchangers.
Conversion	Energy conversion equipment including heat engines, heat rejection equipment, and generators.
Balance of Plant	Buildings, land and site improvements, master control system, spare parts, and plant service facilities.
System	Total installed system including standard cost allowances for direct and contingency cost.
Operations and Maintenance	Annual cost for routine plant operations and maintenance.

3.6 Conclusions

The U.S. demand for granular activated carbon (GAC) is projected to grow at an annual rate of 5.6% through 1988 and then slow to a long-term growth rate through the year 2000 of approximately 3%. GAC appears to be in a relatively mature position along its product life cycle with a few short term opportunities, but also with considerable long-term uncertainty. At present, the U.S. capacity for activated carbon exceeds demand by approximately 35%. Since it appears unlikely that demand will surpass industry capacity before the year 2000, a solar GAC plant would most likely have to be the lowest cost producer by a significant margin in order to gain meaningful market penetration.

The internal rate of return for the solar plant and for a natural gas fueled chemical plant were determined using the major assumptions of 1) full capacity production, 2) 20 year plant life, and 3) zero general inflation rate.

For comparison purposes, the rate of return was also determined for a natural gas fueled chemical plant. The following lists the results for 0% and 3% annual escalation rates of fuel/feedstock costs and product selling prices.

	Escalation Rate	Internal Rate of Return
Solar Plant	0%	11.0%
	3%	14.9%
Gas Plant	0%	20.1%
	3%	23.7%

The data indicates an escalation rate of 0.9% or an 18% cost reduction in the solar portion of the plant, allows the solar powered chemical plant to surpass the 12% hurdle rate for the chemical industry. However, for the solar plant to compete with the gas plant, high escalation rates combined with cost reductions in the solar plant are needed. Further analysis shows that if the long-term component cost goals listed in the National Solar Thermal Technology Program Five Year Research and Development Plan 1986-1990 (45) are obtained, the solar powered chemical plant can be competitive with the natural gas plant assuming moderate escalation rates.

4.0 TECHNOLOGICAL UNCERTAINTIES

4.1 Development Plan Overview

The technological uncertainties uncovered during the design phase of this contract identify those areas of concern that require additional evaluation/testing to further develop the solar powered activated carbon production process. To address these technical concerns, a development plan will be utilized. Two categories of technical concern evolved within the development plan. The first includes those technical uncertainties that are key issues in the design, construction and operation of this facility. Development in these areas is essential to construct a functioning facility. The second incorporates technical uncertainties that have a cost impact. These areas of concern could be developed for cost savings, but, would not prevent a test facility from operating. The key issues will be referred to as technical hurdles while those uncertainties with a financial impact will be called economic hurdles.

In the proposal stage of this design study, a hot salt temperature of 1150°C (2100°F) was specified utilizing silicon carbide (a ceramic) as the containment material. Early in the contract additional information was reviewed, eliminating silicon carbide as a viable containment material. Alternate materials, compatible with the 1150°C (2100°F) molten salt, were pursued without success. As a result, the high temperature portion of the process was designed to be fossil fired, allowing the hot salt temperature to be reduced to a manageable 954°C (1750°F). An appropriate material selection was made allowing the design portion to continue. The foundation of the Development Plan is based on the extensive material search.

4.1.1 Organization

The Development Plan centers on the technical uncertainties that became evident during the design study. In addition, an overview emphasizing the solar and chemical plant maturity is included. These will be discussed in the following sections:

4.1 Overview of Development Plan
4.2 Development Plan

The technical uncertainties are divided into technical and economic hurdles. Each of these hurdles is categorized according to the 954°C (1750°F) or 1150°C (2100°F) temperature service as shown below.

TECHNICAL UNCERTAINTIES

	954°C (1750°F) Service	1150°C (2100°F) Service
Technical Hurdles	1-Material Development 2-Salt Properties Development 3-Component Development	Ceramic Development
Economic Hurdles	1-Receiver Thermal Losses 2-Controls & Operating Strategy	

The design study did not pursue the 1150°C (2100°F) service due to failure to locate an adequate compatible material. Return to the higher temperature salt hinges on the development of a containment material. The extreme molten salt temperature limits the material to a ceramic. Therefore, the only 1150°C (2100°F) technical hurdle pursued in this development plan will be ceramic development (see Section 4.2.5).

The uncertainties associated with each 954°C (1750°F) technical hurdle will be discussed, followed by an appropriate development test plan to address the issue. The 954°C (1750°F) economic hurdles will be discussed, but, no outline for development will be included.

4.1.2 Solar Plant Maturity

The design and projected performance of each solar plant component reflects a high level of confidence that a functioning plant is possible. All areas that reduce confidence stem from containment, transportation, and control of the high temperature carbonate salt. Theoretically, a non-corrosive heat transfer fluid that possessed a reasonable heat capacity and did not deteriorate at the receiver temperatures would allow a high confidence plant to be constructed utilizing the components designed for this study. A heat transfer medium with these characteristics has not been identified.

Each component will be reviewed for its state-of-the-art performance level. Material concerns exist for each component except heliostats. In an effort to reduce repetition, the material concerns will not be stated with each component (see Section 4.2.1).

Central Receiver

The receiver configuration selected for the central receiver plant incorporates a single "C" shaped cavity with a north facing aperture. The cavity arrangement was selected for two reasons. First, it minimizes the thermal losses due to convection and re-radiation, and second, it provides protection of the absorption surface from environmental effects.

Although never tested to-date using carbonate salt, high confidence exists in respect to the "C" shaped receiver design and its functioning ability. A level of uncertainty exists as to the efficiency that can be expected at the extreme temperatures required of this study (see Section 4.2.4). Currently, B&W has completed the design and construction of a "C" shaped receiver and will be testing it with a lower temperature nitrate salt during the latter part of 1986. Upon completion, the efficiency concerns for the "C" shaped central receiver should be reduced.

Heliostat Field

The heliostats and the hardware to control them have been through a number of iterations since their inception. A great deal of testing, with satisfactory results, is available.

Salt Heater

The salt heater is a B&W El Paso boiler designed for once through operation. The design and performance characteristics are readily available as it is currently commercially produced.

Steam Generating Subsystem

The intermediate heat exchanger, superheater, evaporator, and steam drum are all components that are effectively designed according to current technology.

Hot and Cold Storage Tanks

The purpose of the tanks is to hold and insulate the carbonate salt. The cold tank does not create any significant concerns as far as design and construction are concerned. The hot tank uses the cold tank design for the exterior support and incorporates an internal insulating system to protect the exterior structure from the extreme hot salt temperature. The design of the internal insulating system is still conceptual in nature and could create problems with construction.

Material concerns exist for each component that contacts the salt. The confidence in this solar plant is high after resolution of containment, transportation, and control of the molten salt. These issues require further development.

4.1.3 Chemical Plant Maturity

The preparation of different kinds of carbon adsorbents, their properties, and their applications in treating liquids and gases has been known for several centuries. But the basis for the industrial production of activated carbon was established by British and German patents around 1900. This process involved the preparation of activated carbon by carbonizing a mixture of vegetable-type material in the presence of metal chlorides. The procedure of using steam or carbon dioxide to activate charred materials was adopted for the first industrial production of activated carbon. This project was undertaken in 1911 by the Fanto Works in Europe. The product was used mainly as a decolorizer in sugar processing.

After the first World War, coconut shells and almond shells were used to yield an active carbon of high mechanical strength and adsorptive power. Later, other raw materials such as saw dust, lignite, and coal were used. Extensive research has been done on the properties of activated carbon and the potential uses of the product. Activated carbon has become one of the most important and most widely used adsorbents. Activated carbon is also used as a catalyst support and sometimes as a catalyst itself. The main disadvantage of activated carbon is its relatively high cost compared to other adsorbents.

The activated carbon production process has been practiced for many years. The general operating steps have been well documented. The off-gas treatment systems to remove tar, sulfur, and ammonia have also been in use for many years. We feel the chemical process is technically mature. There are no significant technical risks in the overall process.

The technical risk for the chemical process subsystem lies mainly in the design and operation of the chemical reaction furnaces. These are the only components which would be significantly different than those in a conventional activated carbon production plant. These risks are discussed in Section 4.2.3.2.

4.2 Development Plan

The technical uncertainties have been separated into two categories: technical hurdles and economic hurdles. Technical hurdles are the key issues that could prevent the design and operation of a functioning facility. Economic hurdles are technical issues that further development could reduce construction and/or operating expenses.

The list of technical hurdles was significantly reduced from those identified in the proposal. The key issues that surfaced during the design phase are; material concerns, salt properties, and component design. The economic hurdles and the ceramic development plan will also be addressed.

Material Concerns - Material uncertainties begin with long term confidence in Inconel 600 as a containment material. The main concern with Inconel 600 is its long term resistance to the corrosive carbonate salt. A second uncertainty, which hampers the design of the high termperature components, is limited creep and fatigue data for Inconel 617 at the required temperatures. These materials may be adequate for the components designed in this study, but further testing is required for confirmation.

Salt Properties - The data base for molten carbonate salt is weak. Conflicting and limited data is evident throughout the required temperature range. In addition, long-term stability of carbonate salt at high temperatures is not well understood. This behavior must be better established to determine requirements for covergas, salt purification, and/or periodic salt replenishment.

Component Design - The components in question are the pumps, valves, and chemical reaction furnaces. The pumps and valves are essential and exposed to the salt's harsh environment at all temperature ranges. Internal pump and valve components that contact the molten salt are areas of uncertainty. The chemical reaction furnaces employ conductive and radiant heat in the production of activated carbon rather than the conventional open flame convective heat utilized by the industry. Verification of product quality would require laboratory and pilot scale tests to study important operating parameters such as conductive and radiant heat transfer rates, temperature gradients, off-gas composition, and reaction times. Additional reaction furnace concerns involve materials of construction, and mechanical design.

Economic Hurdles - Identified in the proposal are receiver thermal losses and controls and operating strategy. Further review/testing of these issues could result in reduced initial costs and/or increased operating efficiency.

Ceramic Development - Potential return to the original 1150°C (2100°F) salt service is included as a means to increase the process's economic feasibility. The principle concern is determination of a corrosion resistant ceramic that has the appropriate strength properties demanded of this process.

These issues will be discussed in the following sections:

4.2.1 Material Development
4.2.2 Salt Properties Development
4.2.3 Component Development
4.2.4 Economic Considerations
4.2.5 Ceramic Development

4.2.1 Material Development

Material development is essential to design, construct, and operate a functioning facility. The main concern is Inconel 600 and its long term resistance to the corrosive carbonate salt. A second uncertainty, which hampers high temperature component design, results from limited creep and fatigue data for Inconel 617 at the required temperatures. These materials may be adequate for the components designed in this study but further testing is required for confirmation.

4.2.1.1 Description of Issues

Corrosion

Confidence in Inconel 600 as a corrosion resistant material is limited due to the type and quantity of testing performed to date. The design criteria for Inconel 600 differs from the available test results with respect to temperature and test conditions.

The tests that have evaluated Inconel 600 in molten carbonate salt have been conducted at 900°C (1652°F) which is 56°C (100°F) lower than the designed hot salt temperature. Whether increasing the temperature 56°C (100°F) would make a significant increase in the corrosion rate is not actually known, but does require further testing.

The duration of the corrosion tests ranged from 2 to 60 days in length. Being limited to several data points of 60 days or less makes a 20 year plant life projection difficult. Several approaches to data point extension can be used. The most conservative method involves a linear projection from the last data point. This method results in a greater corrosion rate than typifies actual long term testing. The method that exhibits the slowest corrosion rate takes all the data points and continues the parabolic curve that is formed. The most accurate projection will likely fall on a curve that lies between these two methods. An accurate 20 year plant life projection requires a greater understanding of the corrosion mechanism than is presently available.

SERI's corrosion tests subject alloy coupons to a static, constant temperature solution of molten salt. This type of testing represents a corrosion rate but does not necessarily make an accurate correlation to the design environment. For example, the corrosion of a test coupon in a static solution may not react the same as a length of piping containing the same molten salt in turbulent flow conditions. In addition to corrosion, erosion may play a significant role throughout the molten salt temperature range. The design environment will also experience daily thermal cycling from start-up and shut-down of the solar plant.

Material Properties

The receiver tubes are exposed to varying fluxes in combination with the high temperature salt. Portions of the receiver will see tube temperatures in the 982°C (1800°F) range; Inconel 600 does not have sufficient strength in that range. To provide the strength required, Inconel 600 will be coextruded with a higher temperature alloy. For the receiver Inconel 617 has been selected as the higher temperature material. The fossil fired salt heater experiences containment problems similar to those found in the receiver, so the medium radiative and the high temperature convective furnace sections are designed using the coextruded tubing found in the receiver. The chemical reaction furnaces are designed to utilize platecoils attached to the top and bottom of each hearth in the multiple hearth furnaces. The coils are exposed to the hot molten salt on the interior and a high temperature coal environment on the exterior. Inconel 617, selected for strength in the receiver and the furnace, will not stand up to the high temperature coal atmosphere because of the sulfur content of the coal. To strengthen the platecoils, Incoloy 800H will be combined with Inconel 600 to form the bimetallic platecoils.

Bimetallic materials are utilized successfully in high temperature environments. The material combinations selected for this design study differ from those currently produced by the manufacturers. Engineers at Huntington Alloys (manufacturers of Alloy 600, Alloy 617, and coextruded tubes) did not anticipate any serious complications with forming Alloys 600 and 617 into a coextruded tube. Confidence in coextruded tubes for this design study is satisfactory at this time without extensive testing.

Inadequate creep, fatigue, and relaxation properties for Inconel 617 surfaced during high temperature component design. While designing the coextruded receiver tubes, several assumptions were made to establish the allowable stress range.

The first assumption was that the material Inconel 617 goes through a stress relaxation in accordance with the same mathematical creep equations as Incoloy 800H. It was necessary to go this route since detailed creep data is not available for Inconel 617. It is believed this approach is conservative because if one compares the creep rupture strength data of the two materials, Inconel 617 has a greater rupture strength than Incoloy 800H. Therefore, it would appear that creep relaxation of Inconel 617 would be at a slower rate than 800H.

The second assumption was to assume that the tube is a single wall tube of 617 material instead of a duplex tube comprised of Inconel 600 and Inconel 617 material. Since detailed 617 material properties are not available, it was decided that the increased effort to revise the computer program to account for a dual material was better spent elsewhere. The fact that the tube wall is only 3.2 mm (1/8") thick and that the thickness of each material is 1.6 mm (1/16") leads one to believe that from a structural adequacy standpoint, the results of a single wall material tube is representative for this study. For further detailed effort, it is of paramount importance that additional material testing of 617 be performed to obtain this information.

4.2.1.2 Test Plans

The purpose of this plan is to present the test procedure for resolution of the material concerns realized during this design study. Two separate plans are included; the first is material corrosion followed by material properties.

Material Corrosion Plan

The test objective of the proposed test program is to evaluate the corrosion resistance of several alloys in molten carbonate melts at temperatures up to 1150°C (2100°F). A three task program is proposed to meet this objective.

Task 1 - Thermodynamic Calculations will be performed in order to greatly reduce the necessary number of kinetic experiments. From these calculations, stability diagrams will be constructed that show the conditions under which particular alloys may be corrosion resistant in molten carbonates at temperatures up to 1150°C (2100°F). These diagrams can be presented in two forms: log Po_2 vs. log Pco_2 or oxidizing potential vs. log a Na_2O can be related to log Pco_2; these diagrams are essentially equivalent. These diagrams also have the added advantage of predicting how an environment might be modified such that a corrosion susceptible material could be made corrosion resistant. For example, the proposed molten salt is the ternary eutectic of Na, Li, K carbonate exposed to air at temperature. Stability diagrams at several temperatures could indicate what changes in salt composition or gaseous environment would potentially improve the corrosion performance of a given material.

Task 2 - Kinetic Measurements will involve the evaluation of several alloys and their respective corrosion rates under several environmental conditions and at several temperatures. An electric furnace will be used for these tests. This furnace is capable of 1650°C (3000°F) and can be used as a flow through vessel for various gas mixtures. This furnace has been successfully used for molten slag experiments.

The materials to be tested will be determined from Task 1. The specific environmental conditions will also be determined from Task 1 results.

The type of corrosion test and its duration will depend on the proposed application. For example, cyclic tests may be desirable if materials are expected to experience alternate periods of dry exposure then molten salt exposure. Similarly, thermal cycling may be simulated if this is an expected condition. Also, the type of test will be influenced by the type of test material. Weight change as a function time can be determined for all test materials. Additionally, electrochemical measurements can be used for metal test materials. In particular, linear polarization measurements can give the instantaneous corrosion rate of a metal without removing it from test.

Task 3 - Project Management and Reporting will provide the project management and the reports for the corrosion program outlined in the previous two tasks.

TEST SCHEDULE (Months)

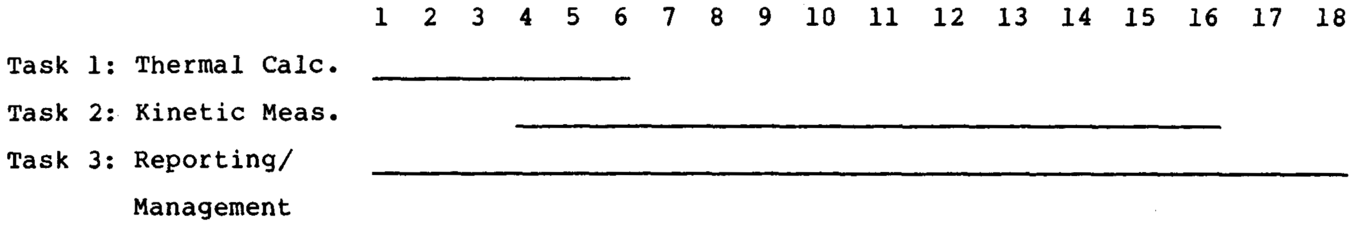

Material Properties Plan

Test data for Inconel 617 is weak in the high temperature range for creep and fatigue. In addition, relaxation data is not available at any temperature. Accurate structural design of the coextruded tubing, utilizing Inconel 617 as a strengthening material, requires further development in these areas. The corrosion testing may add additional materials that require material properties evaluation.

Two approaches can be pursued to obtain the necessary data. Testing to define low-cycle fatigue and creep-fatigue properties of Inconel 617 is the first and most desirable approach. A second approach determines creep-relaxation data as a means to fabricate a creep-fatigue curve. Either approach will allow generation of the required data to properly design the coextruded tubing. The following test outline will pursue the first approach, that of determining low-cycle fatigue and creep-fatigue properties.

The test objective is to define low-cycle fatigue and creep-fatigue properties of Inconel 617 in the temperature range experienced by the receiver components.

The experimental procedure will consist of three tasks. Tasks 1 and 2 will respectively address low-cycle fatigue and creep-fatigue testing. Task 3 will include project management and reporting.

Task 1 - Task 1 will utilize test specimens to determine the low-cycle fatigue tests and will be carried out at $650^{\circ}C$ ($1200^{\circ}F$) and $982^{\circ}C$ ($1800^{\circ}F$) by cycling the strain continuously between equal magnitude of tensile and compressive values at a rate of 4×10^{-3} sec^{-1} until failure. Specimens will be inductively heated to one temperature or the other during testing. Initially, a number of thermocouples will be attached to one specimen in order to adjust the induction heating coil to obtain a uniform temperature distribution over the test region. The induction coil will be shaped through a trial-and-error process to produce a temperature variation of no more than $\pm$ $6^{\circ}C$ ($10^{\circ}F$) in the test section. Once established, the same temperature distribution will be maintained for each test.

A computer-controlled MTS servohydraulic test machine using a liquid-metal grip to ensure accurate specimen alignment will be used. A water-cooled axial extensometer will be employed to measure the resultant strains. A computer will be utilized to automatically accumulate load cell and extensometer data.

Task 2 - Task 2 will utilize the same hollow alloy 617 specimens employed in Task 1. The creep-fatigue tests will be carried out at $982^{\circ}C$ ($1800^{\circ}F$) only. The loading cycle will differ from the low-cycle fatigue testing only in the imposition of a hold at the peak compressive strain in each cycle.

Task 3 - Task 3 will cover the project management and reporting of the previous two tasks that have been briefly discussed.

TEST SCHEDULE (Months)

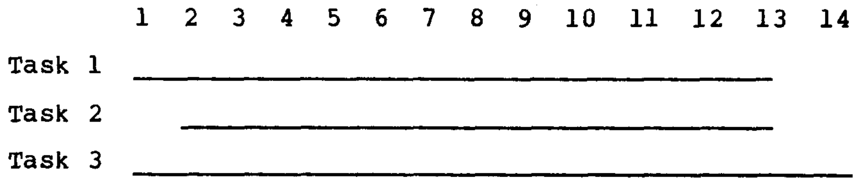

4.2.2 Salt Properties Development

4.2.2.1 Concerns

The data base for molten carbonate salt is weak. Conflicting and limited data is evident throughout the required temperature range. In addition, long-term stability of carbonate salt at high temperatures is not well understood. This behavior must be better established to determine requirements for covergas, salt purification, and/or periodic salt replenishment.

The principal concern with the properties of the eutectic carbonate salt (salt properties are listed in Appendix C; Design Requirements) stem from two conflicting sets of viscosity data. Two grades of carbonate salt have been tested: commercial grade 98.5% pure and reagent grade 99.9% pure. The reason for discrepancies in the reported values of the two grades is not well understood. The variance in reported viscosities is of significant enough magnitude at the lower temperatures to cause major alterations to the receiver and pumps if the incorrect viscosity is used. As a result of this discrepancy, concerns about thermal conductivity, specific heat, and density are raised as to the accuracy of the reported data. The tests performed may be accurate, but the salt purity may differ from the salt to be used in this facility. The second main concern with carbonate salt is lack of data on its life expectancy in an environment where thermal cycling is experienced.

4.2.2.2 Plan for Resolution

The type and quantity of testing required can be performed in a laboratory environment. The physical properties (i.e. viscosity, thermal conductivity, specific heat, and density) can be pursued at $14^{o}C$ ($25^{o}F$) increments throughout the anticipated temperature range. The thermal cycling tests will be more complicated as a result of tracking salt quantity and composition to determine salt degradation with time. The salt development tests will consist of a three task program.

Task 1 - Standard laboratory testing of ternary eutectic carbonate salt properties (i.e. viscosity, thermal conductivity, specific heat, and density) at $14^{o}C$ ($25^{o}F$) temperature increments throughout the operating temperature range. Accurate commercial grade constituents must be used, as deviations in impurities seem to have a reasonable impact on the reported properties.

Task 2 - Thermal cycling will be conducted in an Inconel 600 vessel with daily cycling through the 514-954°C (957-1750°F) temperature range. Accurate quantity and composition will be tracked to determine a rate of decomposition resulting from the extended testing. If material tests result in a salt covergas, this test must utilize the same covergas to simulate actual plant conditions.

Task 3 - Program Management includes creation of test procedures and report writing.

TEST SCHEDULE (Months)

	1	2	3	4	5	6	7	8	9	10	11	12
Task 1	—	—	—	—								
Task 2	—	—	—	—	—	—	—	—	—	—	—	
Task 3	—	—	—	—	—	—	—	—	—	—	—	—

4.2.3 Component Development

The components in question are the pumps, valves, and chemical reaction furnaces. First, the pumps and valves will be addressed together followed by the concerns with the chemical reaction furnaces.

4.2.3.1 Pump and Valve Development

Further pump and valve development to transport and control the flow of molten carbonate salt is critical to the future of Solar Fuels & Chemicals. Pumps and valves will be exposed to all temperature ranges of the salt. To the maximum extent possible, the pumps and valves are located at the low end of the temperature range. However, with the present plant design, high temperature pump and control requirements are present.

The uncertainties associated with pumps are similar but not completely identical to those that evolve from valve technology. The types of pumps selected for this design study raise major concerns in the areas of gaskets and bearings. The principal concerns with valves are stem seals and materials to fabricate gaskets, stem guides and seats. Of course, the material development work to determine a long term containment material is essential prior to the design and construction of the valve and pump bodies.

Pumps

Two pumps form the basis for the plant's pumping requirements. The first is the cold salt pump which will transport the 514°C (957°F) salt from the cold storage tank through the receiver or fossil heater to the hot salt storage tank. The second pump, hot salt, will transport 954°C (1750°F) salt from storage through the reaction furnaces and the intermediate heat exchanger back to the cold salt tank.

The hot salt pump selected is a vertical cantilever pump. This is a one stage pump whose shaft, impeller, and casing extend into the hot salt contained in a sump tank. This allows the bearings to be located where the salt will not contact them. This pump is situated to allow any leakage to spill back into the tank relieving the shaft seals from the task of preventing leakage. The shaft, impeller, and casing that contact the salt will need to be designed to withstand the high temperature salt without erosion, corrosion, or deformation.

Testing beyond that described in section 4.2.1 may be required. Although many critical portions of the pump do not contact the salt, concern for any gaskets in the pump inlet or outlet piping is a concern.

The cold salt pump is also a vertical cantilever. The large head requirement of the cold salt pump has made the design of a vertical cantilever pump on the outside edge of current technology. If a single-stage cantilever pump proves incapable of meeting the necessary cold salt pumping requirements, a multi-stage vertical turbine pump will be utilized. This pump consists of a vertical shaft turning a series of graduated stages driven by a motor situated at the top of the shaft. Each stage is supported via a set of bearings which are in contact with the salt as a lubricating fluid. The close tolerance of the bearings creates a situation where minor corrosion or erosion could lead to a major pump failure. A shaft seal will also be needed to limit the salt flow up the shaft.

Valves

Two general types of values are required for this plant to operate: control valves and shutoff valves. Each type of valve will be exposed to the entire salt temperature range. The same concerns exist for each valve type. The control valves, however, require a smoother and more precise operation.

Valve stem seals to prevent the salt from leaking along the stem is a major concern. The sensitive nature of the chemical process requires accurate functioning valves to control the process by altering the salt flow rate. As a result, a stem seal that can maintain a leakproof barrier when the valve stem is stationary or moving is essential to the valve requirements. A combination of high temperature and corrosive atmosphere has eliminated packings as potential stem seals. Bellows seals were selected for this design study. Two corrosion concerns exist for bellows seals. The first results from the thickness of the seal itself [typically 0.26 mm (0.01")]. Thicker bellows are possible, but require additional development. The second corrosion problem stems from the periodic flexing that a bellows seal experiences. This flexing could aggravate cracks and increase spalling of any protective oxide coating which may have formed on the bellows. Freeze seal valves are a potential alternative to bellows seal, especially as shutoff valves where smooth operation is not critical.

Gaskets, stem guides, and seats comprise the remaining valve concerns. These components will be in direct contact with all salt temperatures and will therefore require the corrosion resistance of the containment material. The stem guide and seat need to be composed of a hard face material. Stellite has been used in many applications (including molten nitrate salt), but compatibility with high temperature carbonate salt is unknown. The gaskets used with nitrate salt components consist of a spiral wound 316SS/asbestos material. Perhaps replacement of the 316SS with Inconel 600 would allow the construction of an appropriate gasket.

Previous Experience

Previous experience with pump and valve performance in molten salt service is limited. This experience is based on two subsystem research experiments: a 5 MW_t receiver experiment and a 7 MW_t energy storage experiment conducted at the Sandia Central Receiver Test Facility (CRTF). In addition, a limited amount of data from other applications in chemical process plants is available. The valves and pumps used in the CRTF experiments performed satisfactorily at temperatures of about 288°C (550°F) in molten nitrate salt. The proposed size of the valves for the commercial applications in nitrate salt are significantly larger than those used in the CRTF experiments. In addition, the operating pressure for the low temperature molten salt (288°C/550°F) is higher for the commercial design than the CRTF operating pressure. This increase in pump and valve sizes will probably require changes in the valve stem seal design and in the basic pump design. Currently in progress is a contract with Babcock and Wilcox to perform a test on nitrate salt pumps and valves suitable for commercial application.

Future Work

Future work in the field of pumps and valves is required to build a Fuels and Chemicals facility. The current efforts at CRTF are in the direction of the needed development. When completed, the level of technical confidence in molten salt service will need to be evaluated. At that time, the direction to pursue for the Fuels and Chemicals pumps and valves will become evident.

4.2.3.2 Chemical Reaction Furnaces Development

The technical uncertainties of the chemical process subsystem were identified by focusing on areas of the plant which are substantially different than a conventional activated carbon plant. Areas of the chemical process subsystem which are identical or similar to a conventional plant include pretreatment, tar recovery, and product classification. In addition, the ammonia removal and sulfur removal steps required for off-gas processing are areas well known to the industry. We feel that these areas do not contain significant technical risks and do not require further technical development at this time.

The areas of the process which do contain technical uncertainties are the chemical reaction furnaces required for carbonization, activation, and regeneration. Further development would be required to address concerns in the following areas:

(1) Product Quality
(2) Materials of Construction
(3) Mechanical Design

Product quality depends on the raw material, the treatment methods, and the reactor conditions. We have chosen raw materials and treatment methods similar to what is now used by some producers of activated carbon. In a conventional furnace, activated carbon is heated by direct gas firing. Heat is tranferred mainly by convection from the hot flue gases. In the proposed furnace design, heat is transferred by radiant and conductive heat transfer coils containing hot molten salt. These operational changes may have an effect on product quality and off-gas compositions.

The plate coils in the chemical reaction furnaces would impose a serious materials of construction challenge. For this conceptual design, we have chosen a composite material of Inconel 600 on the salt side and Incoloy 800H on the carbon side. Fabrication, material compatability, strength, and erosion concerns would require development. A detailed furnace design would require additional design work. A conventional hearth is made of refractory brick that is self supporting and allowed to expand upwards towards the center shaft upon heating. The load is carried to the ground through the refractory walls. The steel shell holds the refractory walls in place and provides no direct support of the hearths. The proposed design consists of steel hearths extending from the outside steel wall of the furnace. The hearths will be air cooled to limit metal temperature and resulting expansion. The proposed design would impose an additional structural loading on the steel shell. These considerations must be resolved in the design of the furnaces.

Description and Impact

Product quality depends on many factors including raw materials, treatment methods and reactor conditions. The final product quality will determine the eventual selling price of the activated carbon. Activated carbon with a higher surface area, higher iodine number, and greater particle hardness will generally sell for a higher price. Product quality should be substantiated through laboratory and pilot testing. Since there is a fairly wide range in pricing ($.80 to $1.05), pilot testing would confirm the product value to be expected from the commercial plant.

Conventional plants use direct gas firing to heat the carbon via convection. The proposed design uses both conduction and radiation to heat the product. Although this should not have a significant effect on product quality, these effects should be measured and confirmed. In the regeneration furnace, a hot radiant plate coil operating at about $700^{\circ}C$ ($1292^{\circ}F$) is used to dry spent carbon at about $120^{\circ}C$ ($250^{\circ}F$). This temperature gradient could have an adverse affect on the carbon structure if the water and volatiles are released under severe conditions. Similar conditions could exist in the carbonization and activation furnace.

The potential impact to the final furnace design could be significant. The high temperature gradients could require lower heating rates to avoid damage to the carbon structure.

During the design of the chemical reaction furnaces, several assumptions were made to obtain the estimated heat transfer areas. Radiant and conductive heat transfer rates were estimated based on these assumptions. In a multiple hearth furnace there is a layer of "dead" material on each hearth. This results because the rakes on the rabble arms do not scrape the hearths, but are held several inches above the hearths. This "dead" material would lie between the conductive heat transfer plate and the product. The heat transfer coefficient of this material must be determined in order to accurately size the furnace.

The contribution from the radiant transfer coils must also be measured and determined if there are any unknown resistances to heat transfer. For example, would the tars evolving in the carbonization furnace tend to adhere to the radiant coil? This could build up a carbon layer and greatly decrease the effectiveness of these coils.

Design details of the furnaces would require innovative design work. The steel hearth support method and heat expansion/contraction must be resolved. The structural details of the furnace walls and hearths should be calculated. The impact is basically involved in the equipment costs.

The plate coil flow patterns and sizes were determined during the conceptual design phase. These coils should be further analyzed to insure proper flow distribution throughout the coil. It may be necessary to operate these coils in separate sections. Initial vendor contacts indicate that these coils may be too large to construct as one coil.

The plate coil support system must also be determined. The most difficult system will be the attachment of the radiant plate coil to the bottom of the hearth. These design details must be resolved in order to obtain an accurate cost estimate based on a reliable design.

The plate coil materials of construction must be further evaluated. A composite material of Inconel 600 on the salt side and Incoloy 800H on the carbon side was chosen for this conceptual design. Other potential higher strength materials should be identified and tested to determine the materials best suited for the plate coil design. The material selection and testing must address fabrication, compatability, strength and erosion concerns. The plate coils located in the "cooler" operating conditons could possibly be constructed from less exotic materials and lower the overall equipment cost. The plate coil material selection testing can be combined with materials selection for the balance of the heat transport subsystem.

Alternatives

Several alternative furnace designs were evaluated during the component design stage. The alternates considered include; 1) direct contact, 2) rotary drum, 3) fluid bed, 4) multiple hearth, and 5) multiple plate. These alternatives are fully described in Section 2.2.3.1. The multiple hearth design was chosen based on proven design concept and other advantages over the other designs considered. The most likely designs which would be considered, if the multiple hearth design hits a roadblock, would be the multiple plate and the fluid bed designs. It is expected that the multiple plate design would have a higher initial cost while the fluid bed would most likely have a higher operating cost.

Plan for Resolution

Several steps would be required to determine the viability of the multiple hearth design. These steps are listed in Figure 4-1. The initial step would involve laboratory evaluation and testing of potential materials of construction. Concurrently, laboratory tests should be conducted to estimate rates and operating parameters. These tests will also address some of the product quality questions. The information obtained from these laboratory programs would then be used to formulate a detailed preliminary furnace design. The furnace design would include the furnace structural details and the plate coil design details. The proposed furnace design would be verified in a pilot plant scale apparatus. The product quality would be verified during these tests. Various operating conditions could also be tested during this stage. Also, various raw material sources and compositions could be tested.

Figure 4-1 is a flow chart outlining the plan for resolution. Each of the four boxes (A-D) represent a task. Following the flow chart, the chief activities for each task are listed on Table 4-1.

FIGURE 4-1

CHEMICAL REACTION FURNACES

PLAN FOR RESOLUTION

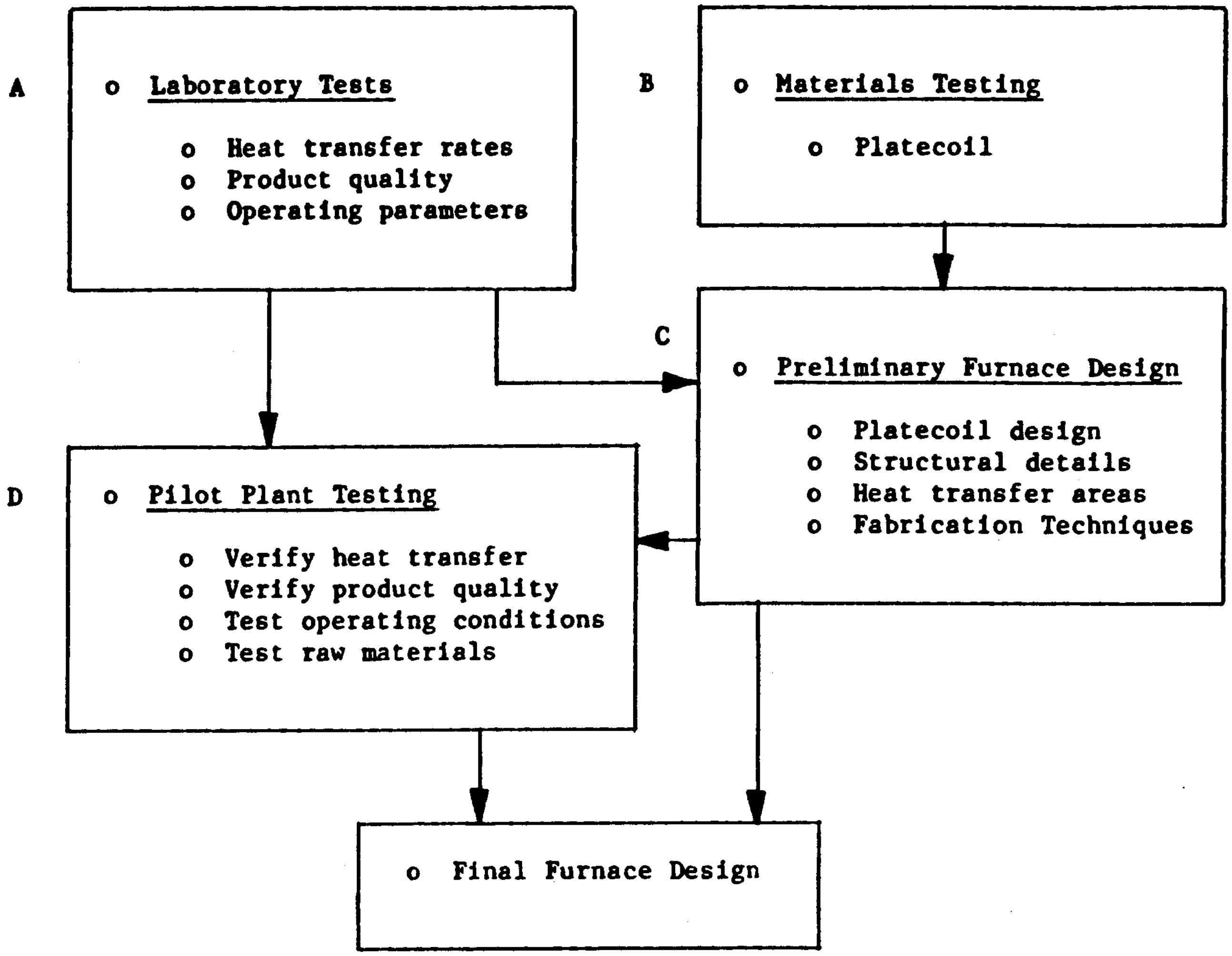

TABLE 4-1

DEVELOPMENT TASK ACTIVITIES

TASK A: LABORATORY TESTS

- Design and construction test equipment
- Obtain materials for testing
- Determine analytical requirements
- Perform tests
- Evaluate results
- Repeat tests as required

TASK B: MATERIALS TESTING

- Select potential material candidates
- Design/construct test equipment
- Perform tests
- Evaluate results
- Repeat tests as required

TASK C: PRELIMINARY FURNACE DESIGN

- Obtain data from laboratory tests
- Contact potential furnace/plate coil vendors
- Determine heat transfer areas
- Design hearth and furnace structural details
- Determine furnace and plate coil fabrication techniques
- Estimate furnace costs

TABLE 4-1 (Cont'd)

DEVELOPMENT TASK ACTIVITIES

TASK D: PILOT PLANT TESTING

- Build pilot scale reactor
- Obtain materials for testing
- Determine analytical requirements
- Perform tests
  - product quality
  - raw materials
  - operating parameters
  - control techniques
  - heat transfer rates
  - furnace design
- Evaluate results
- Determine effect on final furnace design

4.2.4 Economic Considerations

The economic hurdles to be discussed in this section are receiver thermal losses and controls and operating strategy. Additional review/testing of these issues could result in reduced initial costs and/or increased operating efficiency. The economic hurdles will be addressed as follows:

- 4.2.4.1 Receiver Thermal Losses
- 4.2.4.2 Controls and Operating Strategy

4.2.4.1 Receiver Thermal Losses (Reference 43)

The uncertainty of receiver thermal losses involves accurate determination of the quantity and source of lost energy. Current receivers, operating in the temperature range associated with electrical power generation, still create uncertainty as to the quantity of energy lost. Solar fuels and chemicals require receiver operating temperatures much higher than those utilized in current receiver technology. This increase in overall operating temperature has a corresponding theoretical increase in performance benefits. The temperature increase also significantly expands the uncertainty as to the thermal losses. Greater understanding of the lower temperature receivers will allow a more accurate design of the next generation high temperature receivers.

Receiver thermal loss uncertainties create serious potential cost impacts to a high temperature fuels and chemicals facility. Reduced design performance ratings could require the addition of heliostats which are a significant portion of the solar plant capital costs.

The large radiative and convective losses which are sustained by external receivers render them unsuitable for this study. As a result, a cavity-type receiver was selected for this high temperature application.

The sources of energy loss include conduction, convection, and radiation. Conduction includes energy lost to the receiver structure rather than the heat transfer fluid. This loss is considered to be a small portion of the overall energy losses. Radiative and convective losses compose the majority of all energy lost. These losses are a function of the receiver temperature, heat absorber area and aperture area. The complicated geometries associated with cavity receivers make radiative losses difficult to predict. The various surface positions and shapes make reradiation an issue. Increasing the cavity size increases convective losses to the surrounding air. Convective air flows in the receiver cavity make convection and radiation difficult to separate. Often times the solution utilized to evaluate cavity receiver losses involves the use of an average emmissivity for the entire cavity.

The most common test method utilized for loss evaluation involves determining the performance of the receiver and working backwards. This is done by determining the fluid temperature rise through the receiver and measuring the flow rate. The total heat absorbed is determined from the fluid's heat capacity then is compared to the calculated incident power for a performance ratio. The losses are then simply the difference between incident and absorbed powers. A possible source of error arises as a result of theoretically calculating the incident flux across the receiver. Direct incident measurement with flux gauges in various portions of the receiver could resolve any contradiction between theoretical and actual incident flux. Evaluation of receivers according to performance ratings results in an overall loss estimate but does not address the specific sources of energy loss.

Only through an accurate understanding of heat loss effects will the design of higher temperature receivers be realized with a high degree of confidence. Items such as accurate radiation calculations and a knowledge of forced and natural convection in the receiver cavity are important for design of high temperature receivers.

4.2.4.2 Controls and Operating Strategy

During the design of the system controls and operating strategy an evaluation of technically weak areas was conducted. From a conceptual design viewpoint, no technically impassable issues in respect to instrumentation or control logic were revealed. This review did however, determine several areas where additional development could reduce fabrication costs and increase component life expectancy. The areas of concern involve instrumentation design, system logic and system integration.

Instrumentation Design

Compatibility with the harsh salt is the main concern in respect to hardware. Flow, temperature, and pressure sensors for salt loop measurements will have to be developed or identified from commercially available products. The first step to resolve these issues involves material development (see Section 4.2.1). From that point, the important criterion will be long-term reliability.

Thermocouple protecting tubes are available in various alloys including Inconel 600. Pressure, flow, and level sensors with a double bellow arrangement and NaK as the intermediate fluid may be satisfactory if sufficiently long pressure taps composed of a resistant alloy are employed. The non-contact electromagnetic flow meters (used for molten sodium) will not work with the molten salts since they are poor conductors, unless a traceable additive can be found. Another possible approach, developed at Argonne National Laboratories, is based on utlrasonic flow measurement; the flow sensor is a clamp-on type suitable for pipe flow applications.

System Logic

The system logic can be improved with failure modes and effects analysis (FMEA). This analysis should be conducted to define the failure modes against which system protection should be built into the system design. In addition, ways to mitigate the consequences of failure could reduce costly shutdowns.

System Integration

The system integration should be simulated to evaluate operation and control alternatives. This is especially true as a result of integrating a chemical facility and a solar plant. The simulation should be dynamically interactive similar to training simulators but;

a) not quite as elaborate with respect to interaction equipment and,
b) more rigorous to permit extemporaneous testing and debugging in an operation-like framework.

4.2.5 Ceramic Development Plan

Materials must survive molten carbonate salt to at least 982°C (1800°F), but preferably as high as 1150°C (2100°F) to build a solar powered activated carbon production facility. It is not known what materials will survive these conditions for an adequate period of time. To define the economic feasibility of the process, it is essential to know how well various materials will perform, what is their cost for various component configurations, and how long they can be expected to last. It is the test plan objective to address the survivability of ceramic materials in the carbonate salt environment. It is noted that other material properties, such as thermal shock resistance, density, and strength also need to be considered.

4.2.5.1 Test Plan

The objective of the plan is to assess the survivability of candidate ceramic materials in a molten salt environment consisting of roughly one-third by weight of each of potassium carbonate, sodium carbonate, and lithium carbonate.

It is recommended that the following activities be performed:

1. Selection of candidate materials for testing.

   The following tasks will be performed to complete this activity:

   a. Survey of literature to pick candidate material systems.

   b. Match and rank material systems relative to fabricability. For example, a given material may be feasible for a valve part or seal, but not for a tube length or a monolithic lining. Also, the material processing technique may have an important influence upon the results of corrosion testing. For example, a hot pressed valve part of a given material may have different properties than an extruded tube length of the same material.

Highest priority will be given material systems that are presently commercially available in the configurations required. Second priority will be given to material systems that, although not presently available commercially in the configurations required, are judged to have a reasonable probability of becoming available. Lowest priority will be given materials which, although not given a high probability of becoming commercial in the desired configuration, do have the possibility of being applied as a coating or liner. New/exotic/costly materials which are judged to have a low probability of becoming commercially available in the desired configurations and are not appropriate as a coating will not be considered.

2. Procure/fabricate test specimens.
   Whenever possible, commercially available ceramic materials will be tested. More than one vendor source and/or material grade will be tested whenever possible. Materials not presently available commercially will be fabricated.

3. Design Testing Apparatus and Procedure - The following tasks will be performed to complete this activity:
   a. Survey of literature to determine procedures and equipment that have been used previously.
   b. Design apparatus and write procedure.

4. Fabricate/procure testing apparatus.

5. Perform "short term" corrosion testing (982°C; 1800°F); define "short term".

6. Analyze results
   a. Write procedure for doing analysis (parameters are expected to include wall thinning, weight change, physical appearance, strength loss, and change in microstructure).
   b. Perform analysis.
   c. Screen out poor performers.

7. Perform "long term" corrosion testing (982°C; 1800°F); define "long term".

8. Analyze results (as 6).

9. Rank materials for 982°C (1800°F) application.

   a. According to configuration

      1. tube
      2. monolith
      3. large, simple (e.g., brick)
      4. large, complex
      5. small, simple (e.g., hot pressed)
      6. small, complex (e.g., hot pressed and machined or injection molded)
      7. liner or coating.

10. Perform activities 5 through 9 at 1150°C (2100°F).

11. Reporting - The final report will include:
    a. Results of literature survey for candidate materials for corrosion testing and for apparatus and procedures for corrosion testing of molten carbonates (or other salt systems).
    b. Description of apparatus used and procedures.

    c. Listing of material systems both considered and tested.

Description of such material systems. Listing of vendor sources and cost data, if applicable. Listing of shape and size availability.

d. Details of testing and results (at 982°C/1800°F and 1150°C/2100°F), including abnormalities occurring during testing, and descriptions of analytical procedures and results.

e. Materials recommendations for applications at 982°C (1800°F) and 1150°C (2100°F). These will be further broken down by listing of desired configurations and expected costs.

4.2.5.2 Task Descriptions

Following are the task descriptions for the test plan discussed in Section 4.2.5.1.

Task 1: Prepare Materials for Testing - This includes a literature survey, a process of ranking materials, an activity for procuring or fabricating materials, and a machining activity.

Task 2: Prepare the Testing Apparatus - This includes a literature survey, designing the apparatus, procuring or fabricating the apparatus, writing an operating procedure, and perform check-out runs.

Task 3: Perform the Testing - This includes both short term and long term testing at each of 982°C (1800°F) and 1150°C (2100°F).

Task 4: Perform the Analysis - This includes writing procedures for the analysis techniques that will be used and for doing the analysis after each test sequence.

Task 5: Reporting and Making Recommendations - This includes reporting the results of the literature surveys, describing the apparatus, describing the test and analysis procedures, material descriptions (availabilities, costs, vendor sources), results of testing, and recommendations.

Task 6: Program Management - This includes task coordination and general activities required to manage the program.

FIGURE 4-2

CORROSION TESTING OF CERAMIC MATERIALS

SCHEDULE AND COSTS

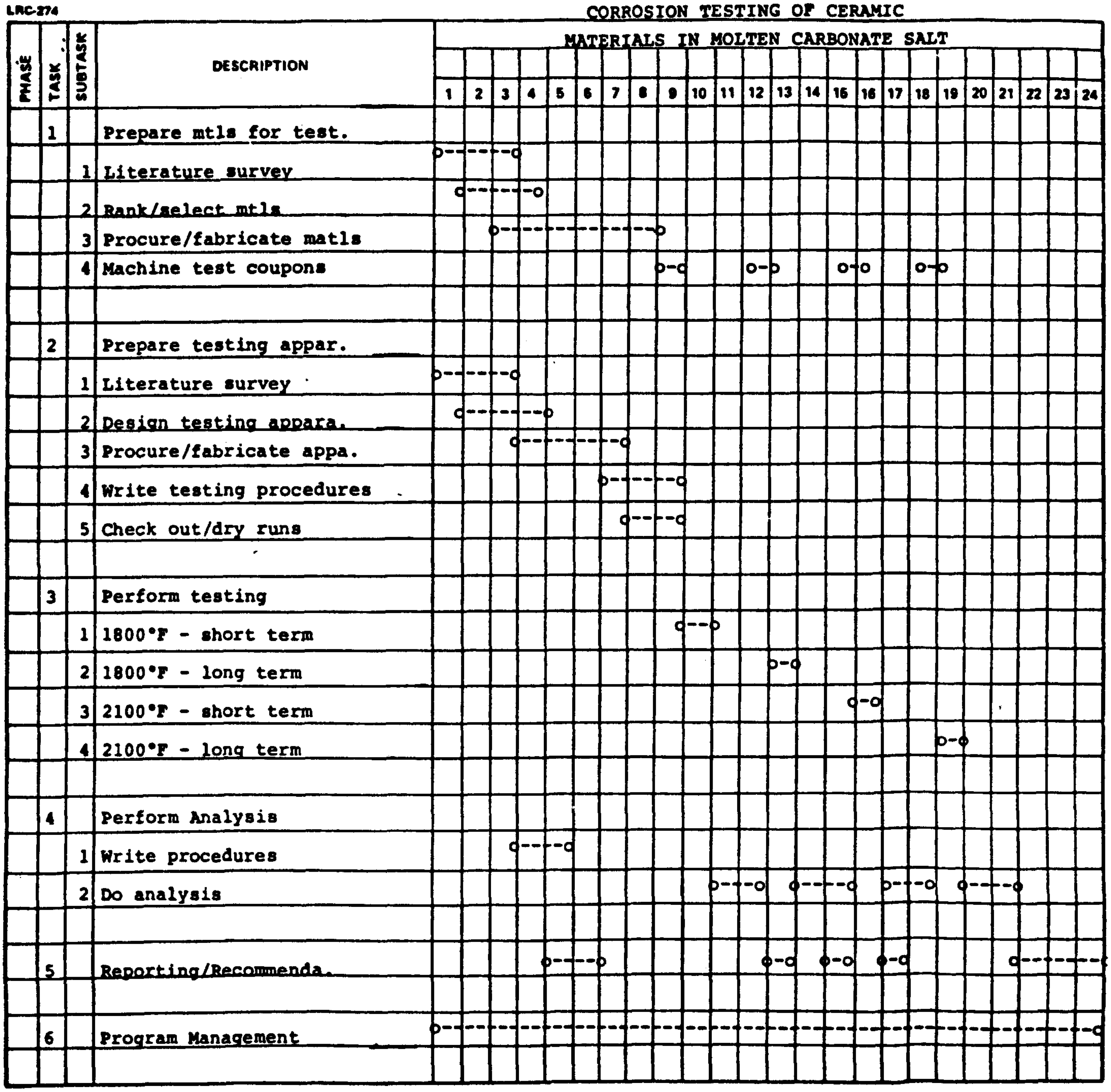

PHASE	TASK	SUBTASK	DESCRIPTION
	1		Prepare mtls for test.
		1	Literature survey
		2	Rank/select mtls
		3	Procure/fabricate matls
		4	Machine test coupons
	2		Prepare testing appar.
		1	Literature survey
		2	Design testing appara.
		3	Procure/fabricate appa.
		4	Write testing procedures
		5	Check out/dry runs
	3		Perform testing
		1	1800°F - short term
		2	1800°F - long term
		3	2100°F - short term
		4	2100°F - long term
	4		Perform Analysis
		1	Write procedures
		2	Do analysis
	5		Reporting/Recommenda.
	6		Program Management

5.0 CONCLUSIONS AND RECOMMENDATIONS

The Solar Fuels and Chemicals System Design Study has provided B&W's project team a vehicle to apply their combined expertise toward evaluating both technical and economic feasibility of a new application of solar thermal central receiver technology. The project plan was structured to provide a balance of information requiring development to support the technical and economic conclusions which follow.

5.1 Conclusions

THE EXTENSION OF SOLAR THERMAL CENTRAL RECEIVER TECHNOLOGY TO HIGHER TEMPERATURES IS FEASIBLE.

The carbon production process as originally envisioned required 1150°C (2100°F) carbonate salt. The inability to find a suitable containment material (ceramic or metallic) necessitated modifying the process to partially heat the spent activated carbon with gas. This lowered the required hot salt temperature to 955°C (1750°F).

At this intermediate salt temperature, the design of major components has not deviated from existing methods and design practice with the exception of the receiver panels. Co-extruded tubes (Inconel 600 for salt containment; Inconel 617 for strength) are used because Inconel 600 by itself does not have the required strength at these elevated temperatures.

Existing corrosion and material property data generally support the choice of Inconel 600 as a salt containment material. However, additional corrosion testing is essential to confirm the selection and establish the required corrosion allowances.

Additionally, although estimates of creep data for Inconel 617 have been made and are believed conservative, this property data must be developed.

AS ADVANCED CONCEPTS/APPLICATIONS MOVE TOWARD HIGHER TEMPERATURES, THE HEAT TRANSPORT SUBSYSTEM BECOMES A MORE SIGNIFICANT COST CONTRIBUTOR TO CAPITAL COSTS THAN THE COLLECTOR FIELD.

\- -

Cost reduction effort in solar central receivers has historically emphasized development of low cost heliostats because the field was the major cost contributor. Benefits of this strategy are visible in this study in using a $60/m^2 cost for stressed-membrane heliostats. It becomes obvious in reviewing the capital cost summary that the heat transport subsystem is the relatively largest cost contributor. This results from more expensive materials and design features to accommodate high temperature.

Additionally, the carbonate salt was chosen as a working fluid due to its characteristics at elevated temperatures. This imposes significant restrictions on choice of materials for compatibility. Materials testing and development will need to receive the same high priority attention that has benefitted heliostat development.

THE CONCEPT DEVELOPED HAS THE POTENTIAL FOR EXCEEDING THE HURDLE RATE FOR THE CHEMICAL INDUSTRY.

\- -

The hurdle rate is the rate of return necessary to attract investment capital to a particular venture. It is determined on the basis of risk and alternatives and is typically 12% for the chemical process industry. Our evaluation shows a 11.0% rate of return based on total costs and revenues and a 0% escalation rate (on feedstock, fuel, and product). The 12% hurdle rate can be met if a 0.9% escalation rate occurs,or a 18% cost reduction in the solar portion of the plant capital costs can be realized.

AS CURRENTLY CONFIGURED, THE SOLAR FACILITY RATE OF RETURN DOES NOT COMPARE FAVORABLY WITH A GAS FIRED FACILITY WITHOUT SIGNIFICANT ESCALATION OF GAS AND ELECTRICITY PRICES AND CAPITAL COST REDUCTIONS.

\- -

After showing that the solar activated carbon producing plant could meet the 12% hurdle rate with modest escalation and capital cost reduction, a comparative evaluation was made to a gas-fired facility. A comparable rate of return can be achieved but only through the benefits of both a higher escalation rate (10%) and the achievement of all the cost reduction goals of the 1986-1990 Five Year R&D Plan of the National Solar Thermal Technology Program (Ref. 45). This combination constitutes a very optimistic approach to the overall solar/fossil comparison.

THE GRANULAR ACTIVATED CARBON (GAC) MARKET FORECAST IS CHARACTERIZED BY SLOW GROWTH AND UNCERTAINTIES.

\- -

The GAC market is projected to grow at 5.6% through 1988 and slow to a longer term rate of 3% through 2000. The "most likely" environment suggests that existing capacity will be underutilized through 2000. This increases emphasis on cost reduction and energy price escalation to justify continuing development of the process. Uncertainties are a result of unpredictable worldwide energy outlook, legislative changes affecting the environment and technological advancements in competing products.

5.2 Recommendations

This conceptual design study as originally proposed was the first phase of a multiphase program envisioned to bring the application of solar central receiver technology and chemical production to commercialization. Subsequent phases included:

- Advanced conceptual design
- Bench scale laboratory tests
- Component design and development
- Subsystem research experiment
- Pilot plant

The activated carbon production process was chosen because it was an energy intensive process, it required improvements to existing technology, it had economic potential, and it was amenable to frequent startups/shutdowns of a solar facility. The conclusions reported in Section 5.1 alter the above scenario for development of this process. Recommendations for continued development follow.

A DECISION TO CONTINUE DEVELOPMENT OF THE ACTIVATED CARBON PRODUCTION PROCESS SHOULD BE BASED ON AN IMPROVED OVERALL ECONOMIC PICTURE.

\- -

Although the concept has been shown to be technically feasible and it has the potential for meeting the hurdle rate for the chemical industry, it does not currently compare favorably with a gas-fired facility. A significant escalation in gas prices and/or decrease in solar plant capital costs are essential to improving solar's economic position. Additionally, the market forecast projects only a small long term annual growth (3%). The forecast may be significantly impacted by environmental legislation, technological innovations, and the projections for energy growth. Based on the current economic picture, development of the solar powered granular activated carbon production and regeneration process should be discontinued.

EVALUATION OF FUTURE SOLAR FUELS AND CHEMICALS APPLICATIONS MUST CONSIDER THE IMPACT OF HIGH TEMPERATURE ON THE PROCESS AND THE PROCESS ECONOMICS.

This study has concluded that the solar heat transport subsystem capital costs have become the single most significant contributor to the total plant capital costs. The advantages of higher temperature operation to potentially improve system efficiency and the basic need for higher temperatures to operate a fuels and chemicals production process must be balanced against high capital costs which could render a given process uneconomical. Caution must be exercised in choosing and evaluating future applications of solar energy to fuels and chemicals processes.

EMPHASIS SHOULD BE PLACED ON PERFORMING "UP-FRONT" ECONOMIC EVALUATIONS OF FUTURE PROPOSED FUELS AND CHEMICALS APPLICATIONS

The economic results of the study of the production and regeneration of activated carbon indicate the need to place emphasis on "up-front" economic evaluations of other potential fuels and chemicals processes prior to embarking on preliminary conceptual plant design studies. Using the base of technical and economic information developed in fuels and chemicals economic studies performed to date, "ballpark" economic evaluations of other intermediate or high temperature processes can be made to estimate their economic viability, prior to proceeding with a preliminary conceptual design study of a given process.

Should the decision be made to continue development of solar fuels and chemicals technology, the following recommendations should be considered.

ADDITIONAL BASIC RESEARCH SHOULD BE PURSUED IN THE AREAS OF SALT CHEMISTRY AND MATERIAL COMPATIBILITY

Existing corrosion and material property data generally support our design selection decisions, but the data base is not sufficient to proceed with a more detailed design phase. A broader data base of carbonate salt properties is needed that includes salt stability characteristics at elevated temperatures. Corrosion testing of a wider range of candidate materials is also needed. These tests should include effects of altering the salt chemistry and the presence/absence of oxygen or other cover gases. Methods of testing must be rigorous. This testing is essential to the pursuit of higher temperature systems using carbonate salts.

SPECIFIC COMPONENT STUDIES COULD BE PURSUED

While efforts will continue to identify potential new applications for central receiver technology, specific component studies could be pursued. Based on the selection of an advanced heat transport medium for high temperatures (e.g. carbonate salt), component studies on receivers, storage tanks, and pumps and valves would be timely and valuable if geared toward cost reduction goals. The viability of central receiver technology will ultimately be decided by economics. Such studies could be pursued independent of the chemical process.

6.0 REFERENCES

1. Kirk-Othmer Encyclopedia, 4th Edition, Volume 4, pp. 562-563.
2. Yehaskel, A.A. "Activated Carbon Manufacturing and Regeneration", Noyes Data Corporation, 1978.
3. Wen, C.Y. and Lee, E.S., "Coal Conversion Technology", Addison-Wesley Publishing Company, Inc. 1979.
4. Wilson, P.J., and Wells, J.H., "Coal, Coke, and Coal Chemicals", Chemical Engineering Series, McGraw Hill Book Company, 1950.
5. Lowry, H.H., "Chemistry of Coal Utilization", Volume I (1945), II (1947), and Supplementary (1963), John Wiley & Sons, Inc.
6. Cheremisinoff, P.N., and Ellerbusch, F., "Carbon Adsorption Handbook", Ann Arbor Science Publishers, Inc., 1978.
7. Fieldner, A.C., Hall, R.E., and Gallaway, A.E., "A Study of the Production of Activated Carbon from Various Coals and Other Raw Materials", Technical Paper 479, U.S. Bureau of Mines, 1930.
8. Murty, H.N., "Granular Activated Carbon Manufacturing from Subbituminous Coal Treated with Dilute Inorganic Acid", U.S. Patent 4,144,193, March 13, 1979.
9. Various phone conversations with Vendors.
10. Olson, E.T., "Impact Pulverization Plus Additives in the Production of Activated Carbon from Coal", U.S. Patent 3,483,134, December 9, 1969.
11. Alford, H.E., "Multiple Hearth Furnace", U.S. Patent 3,994,829.
12. Kohl, A.L. and Riesenfeld, F.C., "Gas Purification", Third Edition, Gulf Publishing Company, 1979.
13. "Gas Processing Handbook", Hydrocarbon Processing, April, 1984, pp. 51-144.
14. Campbell, J.M., "Gas Conditioning and Processing", Volume 1 and 2, Campbell Petroleum Series.
15. Selvig, W.A. and Ode, W.H., "Low Temperature Carbonization Assays of North American Coals", Bulletin 571, U.S. Bureau of Mines, 1957.
16. Activated Carbon Product Catalog, Calgon Corporation.

17. Smisek, Milan and Cerny, Slavoj, "Active Carbon, Manufacture, Properties, and Applications", Elsevier Publishing Company, 1970.

18. Leonard, J.W., "Coal Preparation", 4th Edition, The American Institute of Mining, Metallurgical, and Petroleum Engineers, Inc., 1979.

19. Noacki, Perry, "Coal Gasification Processes", Energy Technology Review No. 70, Noyes Data Corporation, 1981.

20. Lueg, P. and Thienemann, H., "Process for Producing Active Carbon", U.S. Patent 1,641,281, September 6, 1927.

21. Juntgen, H., "Process of Making a Ball-Shaped Adsorption Coke", U.S. Patent 3,623,999, November 30, 1971.

22. Etal, O.E., "High Speed Continuous Method and Apparatus for Carbonization and Activation of Organic Material", U.S. Patent 3,446,493, May 27, 1969.

23. Morrell, J.C., "Structural Adsorptive Carbon and Process of Making the Same", U.S. Patent 2,008,144, July 16, 1935.

24. Fuebs, W.M., "Granulated Active Carbon from Bituminous Coal", U.S. Patent 2,339,742, January 18, 1944.

25. Goss, W.C., "Method of Calcining Coal for Production of an Activated Primary Carbon", U.S. Patent 2,407,268, September 10, 1946.

26. Kiikka, O.A., "Carbonization of Bituminous Coals", U.S. Patent 3,630,959, December 28, 1971.

27. Murty, H.N., "Granular Activated Carbon Manufacture from Subbituminous Coal Mixed with Concentrated Inorganic Acid without Pitch", U.S. Patent 4,032,476, June 28, 1977.

28. Murty, H.N., "Granular Activated Carbon Manufacture from Brown Coal Treated with Dilute Inorganic Acid", U.S. Patent 4,149,994.

29. Murty, H.N., "Granular Activated Carbon Manufacture from Brown Coal Treated with Concentrated Inorganic Acid", U.S. PAtent 4,149,995.

30. Murty, H.M., "Granular Activated Carbon Manufacture from Subbituminous Coal Treated with Dilute Inorganic Acid: Direct Activation Method", U.S. Patent 4,157,314, June 5, 1979.

31. Zanitsch, R.H., and Lynch, R.T., "Selecting a Thermal Regeneration System for Activated Carbon", Chemical Engineering, Jan. 2, 1978, pp. 95-100.

32. Culp, R.L., and Culp, G.L., Advanced Wastewater Treatment, New York: Van Nostrand Reinhold Company, 1971.

33. Juhola, A.J., and Tepper, F., "Regeneration of Spent Granular Activated Carbon", U.S. Department of the Interior, PS 189955, 1969.

34. Interview with Dr. John Dollimore, Energy Reseach Center, University of North Dakota, 7/18/85.

35. Van Beek, R., Johnson, H.R., and Massey, M.L., "Start-Up and Operation of a Fluidized Bed Regenerator for Granular Carbon Used in Industrial Waste Treatment", 53rd Water Pollution Control Federation Conference, 1980.

36. ASME Boiler and Pressure Vessel Code, Section III, Nuclear Power Plant Components, Division 1, Code Case N-47.

37. P. DeLaquil III, and J.V. Anderson, "The Performance of High-Temperature Central Receiver Systems", Sandia National Laboratories, SAND84-8233, July, 1984.

38. D.L. Siebers and J.S. Kraabel, "Estimating Convective Energy Losses from Solar Central Receivers", Sandia National Laboratories, SAND84-8718, April, 1984.

39. T.A. Dellin, M.J. Fish, C.L. Yang, "A User's Manual for DELSOL 2: A Computer Code for Calculating the Optical Performance and Optimal System Design for Solar Thermal Central Receiver Plants", SAND81-8237, August, 1981.

40. Arizona Public Service, Martin Marietta, Black & Veatch, and Babcock & Wilcox, "Preliminary Design of a Solar Central Receiver for a Site-Specific Repowering Application (Saguaro Power Plant)", DOE, Septemter 1983.

41. Weingart, J.M., "Cost Data Management System (CDMS Version 2.0)" Polydyne Inc., May 1985.

42. National Solar Thermal Technology Program, "Five Year Research and Development Plan", DOE, December 1984 (draft).

43. Boehm, R. F., "Receiver Loss Evaluations", University of Utah, October 3, 1985.

44. ASME Boiler and Pressure Vessel Code, Section VIII, Division 1, Pressure Vessels.

45. National Solar Thermal Technology Program, "Five Year Research and Development Plan", DOE, December 1985 (rough draft, September 27, 1985).

UNLIMITED RELEASE
INITIAL DISTRIBUTION

U.S. Department of Energy (5)
Forrestal Building
Code CE-314
1000 Independence Avenue, S.W.
Washington, D.C. 20585
Attn: H. Coleman
S. Gronich
F. Morse
M. Scheve
R. Shivers

U.S. Department of Energy
Forrestal Building, Room 5H021C
Code CE-33
1000 Independence Avenue, S.W.
Washington, D.C. 20585
Attn: C. Carwile

U.S. Department of Energy
Albuquerque Operations Office
P.O. Box 5400
Albuquerque, NM 87115
Attn: D. Graves

U.S. Department of Energy
San Francisco Operations Office
1333 Broadway
Oakland, CA 94612
Attn: R. Hughey

University of California
Environmental Science and Engineering
Los Angeles, CA 90024
Attn: R. G. Lindberg

University of Houston (2)
Solar Energy Laboratory
4800 Calhoun
Houston, TX 77704
Attn: A. F. Hildebrandt
L. Vant-Hull

Analysis Review & Critique
6503 81st Street
Cabin John, MD 20818
Attn: C. LaPorta

Arizona Public Service Company
P.O. Box 21666
Phoenix, AZ 85036
Attn: E. Weber

Babcock and Wilcox
91 Stirling Avenue
Barberton, OH 44203
Attn: D. Young

Bechtel Group, Inc. (2)
P.O. Box 3965
San Francisco, CA 94119
Attn: P. DeLaquil
S. Fleming

Black & Veatch Consulting Engineers (2)
P.O. Box 8405
Kansas City, MO 64114
Attn: J. C. Grosskreutz
J. E. Harder

Boeing Aerospace
Mailstop JA-83
P.O. Box 1470
Huntsville, AL 35807
Attn: W. D. Beverly

California Energy Commission
1516 Ninth St., M/S 40
Sacramento, CA 95814
Attn: A. Jenkins

California Public Utilities Com.
Resource Branch, Room 5198
455 Golden Gate Ave.
San Francisco, CA 94102
Attn: T. Thompson

Centro Investigations Energetica
Medroansental Technologie (CIEMAT)
Avda. Complutense, 22
28040 Madrid
Spain
Attn: F. Sanchez

DFVLR RF-ET
Linder Hohe
D - 5000 Koln 90
West Germany
Attn: Dr. Manfred Becker

El Paso Electric Company
P.O. Box 982
El Paso, TX 79946
Attn: J. E. Brown

Electric Power Research Institute (2)
P.O. Box 10412
Palo Alto, CA 94303
Attn: J. Bigger
E. DeMeo

Foster Wheeler Solar Development Corp.
12 Peach Tree Hill Road
Livingston, NJ 07039
Attn: S. F. Wu

Georgia Institute of Technology
GTRI/EMSL Solar Site
Atlanta, GA 30332

D. Gorman
5031 W. Red Rock Drive
Larkspur, CO 80118

Jet Propulsion Laboratory
4800 Oak Grove Drive
Pasadena, CA 91103
Attn: M. Alper

Los Angeles Department of Water and Power
Alternate Energy Systems
Room 661A
111 North Hope St.
Los Angeles, CA 90012
Attn: Hung Ben Chu

Martin Marietta Aerospace
P.O. Box 179, MS L0450
Denver, CO 80201
Attn: H. Wroton

McDonnell Douglas (2)
MS 49-2
5301 Bolsa Avenue
Huntington Beach, CA 92647
Attn: R. L. Gervais
J. E. Raetz

Meridian Corporation
5113 Leesburg Pike
Falls Church, VA 22041
Attn: D. Kumar

Public Service Company of New Mexico (2)
M/S 0160
Alvarado Square
Albuquerque, NM 87158
Attn: T. Ussery
A. Martinez

Olin Chemicals Group (2)
120 Long Ridge Road
Stamford, CT 06904
Attn: J. Floyd
D. A. Csejka

Pacific Gas and Electric Company
77 Beale Street
San Francisco, CA 94106
Attn: J. Laszlo

Pacific Gas and Electric Company (4)
3400 Crow Canyon Road
San Ramon, CA 94526
Attn: G. Braun
T. Hillesland, Jr.
B. Norris
C. Weinberg

Public Service Company of Colorado
System Planning
5909 E. 38th Avenue
Denver, CO 80207
Attn: D. Smith

Rockwell International
Rocketdyne Division
6633 Canoga Avenue
Canoga Park, CA 91304
Attn: J. Friefeld

Sandia Solar One Office
P.O. Box 366
Daggett, CA 92327
Attn: A. Snedeker

Science Applications International Corp.
10401 Roselle Street
San Diego, CA 92121
Attn: B. Butler

Solar Energy Research Institute (3)
1617 Cole Boulevard
Golden, CO 80401
Attn: B. Gupta
D. Hawkins
L. M. Murphy

Solar Kinetics Inc.
P.O. Box 47045
Dallas, TX 75247
Attn: J. A. Hutchison

Southern California Edison
P.O. Box 325
Daggett, CA 92327
Attn: C. Lopez

Stearns Catalytic Corp.
P.O. Box 5888
Denver, CO 80217
Attn: T. E. Olson

Stone and Webster Engineering Corporation
P.O. Box 1214
Boston, MA 02107
Attn: R. W. Kuhr

6000	D. L. Hartley; Attn: V. L. Dugan, 6200
6220	D. G. Schueler
6222	J. V. Otts
6226	J. T. Holmes (10)
6226	C. E. Tyner
8000	R. S. Claassen; Attn: R. J. Detry, 8200 P. Mattern, 8300 R. C. Wayne, 8400
8100	E. E. Ives; Attn: J. B. Wright, 8150 D. J. Bohrer, 8160 R. A. Baroody, 8180
8130	J. D. Gilson
8133	L. G. Radosevich
8133	A. C. Skinrood (3)
8265	Publications Division for OSTI (30)
8265	Publications Division/Technical Library Processes Division, 3141
3141	Technical Library Processes Division (3)
8024	Central Technical Files (3)