MCR-80-1320
Contract DE-AC03-79SF 10534

Test Plan

April 1980

Molten Salt Central Receiver Subsystem Research Experiment

Alternate Central Receiver Power System, Phase II

MARTIN MARIETTA

Badger

Arizona Public Service Co

aps.

WE CARE HOW YOU LIVE

MCR-80-1320

MOLTEN SALT CENTRAL RECEIVER
SUBSYSTEM RESEARCH EXPERIMENT
TEST PLAN

APRIL 1980

ALTERNATE CENTRAL RECEIVER

POWER SYSTEM, PHASE II

MARTIN MARIETTA CORPORATION

DENVER DIVISION

PREPARED FOR THE U.S. DEPARTMENT OF ENERGY
UNDER CONTRACT NO. DE-AC03-79SF10534

CONTENTS

Figure

Table

1.0 INTRODUCTION

This document describes the tests that will be performed with a solar central receiver subsystem research experiment. The heat transfer fluid used by the receiver is a salt mixture made up of 60% $NaNO_3$ and 40% KNO_3. The tests will be performed at the Central Receiver Test Facility (CRTF) in Albuquerque, New Mexico.

The major elements of this subsystem research experiment (SRE) include the receiver, a molten salt pump, a sump and an air cooler. The air cooler uses ambient air to reject the energy collected by the receiver. The nominal salt temperatures at the receiver inlet and outlet are 288°C (550°F) and 566°C (1050°F), respectively.

1.1 TEST OBJECTIVES

1.1.1 Primary Objective

The overall objective is to demonstrate that a solar receiver that utilizes molten salt as a heat transfer fluid can operate safely, reliably, and efficiently both in steady-state and transient modes and at temperatures and radiation flux levels consistent with commercial plants.

1.1.2 Specific Objectives

The specific objectives of this activity are to investigate:

1) Performance at full load;

2) Performance at partial load;

3) System startup from "cold" conditions;

4) System overnight shutdown and startup;

5) System emergency shutdown;

6) Ability of the system to recover from cloud interruptions in a controlled manner;

7) Durability of receiver within the limitations of the test time available;

8) Qualitative performance comparison of cavity and exposed flat plate receivers.

The specific objectives of the activity that will be studied are:

1) Methods to prevent the salt from freezing;

2) Convection losses;

3) Design and fabrication techniques, particularly as they relate to commercial designs.

1.2 SCOPE

The purpose of this experiment is to demonstrate the performance of a molten salt receiver. Other elements of a commercial system such as the heliostats, boiler, tower, etc are not part of this demonstration. However, the molten salt pump, heat tracing, sump, piping, instrumentation, and controls will be demonstrated.

1.3 BACKGROUND

Martin Marietta has performed two studies of molten salt central receiver systems for the Department of Energy. The first was entitled Conceptual Design of Advanced Central Receiver Power System, Phase I Contract EG-77-C-03-1724. The final report for this activity was released in September 1978. The second study was entitled Solar Central Receiver Hybrid Power System, Contract DE-AC-03-7SET21038. The work performed under this contract is documented in a final report dated September 1979. Both of these studies were concerned with commercial--size systems although both of these studies contributed a significant amount of information that was useful in the design of this test.

1.4 TEST PROGRAM SUMMARY

Table 1-1 lists the tests that will be performed during this program. The checkout tests will be performed both in Denver and at ground level on the elevating module at CRTF. Although the majority of the checkout tests are on a component level, the functional tests (CO-8 and CO-9) are system-level activities. The functional test with salt (CO 9) is designed to demonstrate that the system is ready for operation with solar flux.

At the conclusion of the checkout tests the experiment will be taken to the 61-m (200-ft) level of the tower where all the remaining tests will be performed. The receiver will be tested first in the cavity configuration followed by tests in the exposed configuration. This sequence was chosen since the cavity is more conservative than the exposed configuration relative to salt freezeup problems. This is because the cavity is fitted with doors that will be closed during shut down operations. With these doors shut, heat will be retained in the

receiver for a considerably longer time than in the exposed configuration and therefore the risk of salt freezeup is significantly reduced. This is an important consideration both in normal and emergency shutdown situations.

The preliminary checkout procedures are designed to be "shakedown" exercises and will provide the test crew experience in controlling and operating the experiment. The performance tests will yield efficiency data for both the cavity and exposed configurations and demonstrate the ability to recover from cloud interruptions. Although the results from the performance tests will be used to estimate losses, separate convection tests will be conducted to gain as much insight as possible relative to the convective processes. The convection tests will be conducted with all the heliostats off line to eliminate the uncertainty relative to the solar load from the energy balance on the receiver. The special tests will be performed at the end of the test program since they will "stress" the receiver. These tests will also demonstrate the ability of the receiver to withstand load cycling and to operate at full load for a substantial length of time.

Table 1-1 Tests To Be Conducted

4.1			Checkout Tests
4.1.1		CO-1	Airflow Distribution for Air Cooler (Denver)
4.1.2		CO-2	Hydrostatic and Leak Checks (Denver)
4.1.3		CO-3	Sump and Air-Cooler Heaters (Denver)
4.1.4		CO-4	Thermocouples (Albuquerque)
4.1.5		CO-5	System Trace Heaters (Albuquerque)
4.1.6		CO-6	Functional Valve Operation (Albuquerque)
4.1.7		CO-7	Electrical Control System (Albuquerque)
4.1.8		CO-8	Functional Test with Water (Albuquerque)
4.1.9		CO-9	Functional Test with Salt (Albuquerque)
4.2			Preliminary Checkout Procedures - Cavity
4.2.1	1	PC-1	Partial Load - Tower Console Control
4.2.2	2	PC-2	Partial Load - Central Computer Control
4.2.3	3	PC-3	Maximum Load - Tower Console Control
4.2.4	4	PC-4	Maximum Load - Central Computer Control
4.2.5	5	PC-5	Maximum Load - Tower Console Control
4.2.6	6	PC-6	Maximum Load - Central Computer Control
4.2.7	7	PC-7	Partial Load with Emergency Shutdown
4.2.8	8	PC-8	Recovery from Simulated Cloud Passage
4.3			Convection Tests - Cavity
4.3.1		9CC	Convection Loss at 700°F
4.4			Performance Tests - Cavity
4.4.1	10	PFC-1	Efficiency Tests at 35 to 100% of Maximum Load
4.4.2	11	PFC-2	Maximum Load for 20 Hours
4.4.3	12	PFC-3	Recovery from Simulated Cloud Passage
4.5			Performance Tests - Exposed
4.5.1	13	PFE-1	Efficiency Tests at 45 to 100% of Maximum Load
4.5.2	14	PFE-2	Recovery from Simulated Cloud Passage
4.6			Convection Tests - Exposed
4.6.1	15	CE	Convection Loss at 700°F
4.7			Special Tests - Cavity
4.7.1	16	SE-1	Cycle Tests
4.7.2	17	SE-2	Endurance Test
4.7.3	18	SE-3	Extreme Cloud Conditions
4.7.4	19	SE-4	Lateral Support Shadowing
4.7.5	20	SE-5	High Localized Fluxes

2.0 EXPERIMENT DESCRIPTION

2.1 GENERAL DESCRIPTION

A simplified schematic of the SRE is shown in Figure 2-1. The experiment layouts are given in Figures 2-2 and 2-3, and artists' concepts are given in Figures 2-4 and 2-5. The experiment consists of a receiver, vertical cantilevered molten salt pump, sump, air cooler, and weigh tank. The air cooler rejects the solar energy collected by the receiver. The weigh tank is used to provide accurate salt flow rates.

2.2 MAJOR COMPONENTS

The SRE schematic is shown in Figure 2-6. Note that valves PV-1 through PV-9 and DV-1 through DV-10 are used during filling and draining operations and are all closed during normal operation.

2.2.1 Receiver

The receiver experiment parameters are given in Table 2-1. The receiver is designed with a single inlet and a single outlet and has 18 fluid passes. The fluid passes are in series and each pass is made up of 16 tubes, which are in parallel.

2.2.2 Pump

The centrifugal pump is mounted vertically. Its nominal flow rate is 0.00757 m^3/s (120 gpm) with a headrise of 1.17 MPa (170 psi). The power requirement is 44.8 kW (60 hp). A diagram of a typical pump is given in Figure 2-7.

2.2.3 Sump

The sump is placed at an elevation that will allow the molten salt throughout the system to drain by gravity into it at the end of each test day. The sump is heated and insulated to maintain the salt temperature overnight as well as to maintain the proper salt temperature at the receiver inlet. The sump is shown in Figure 2-8.

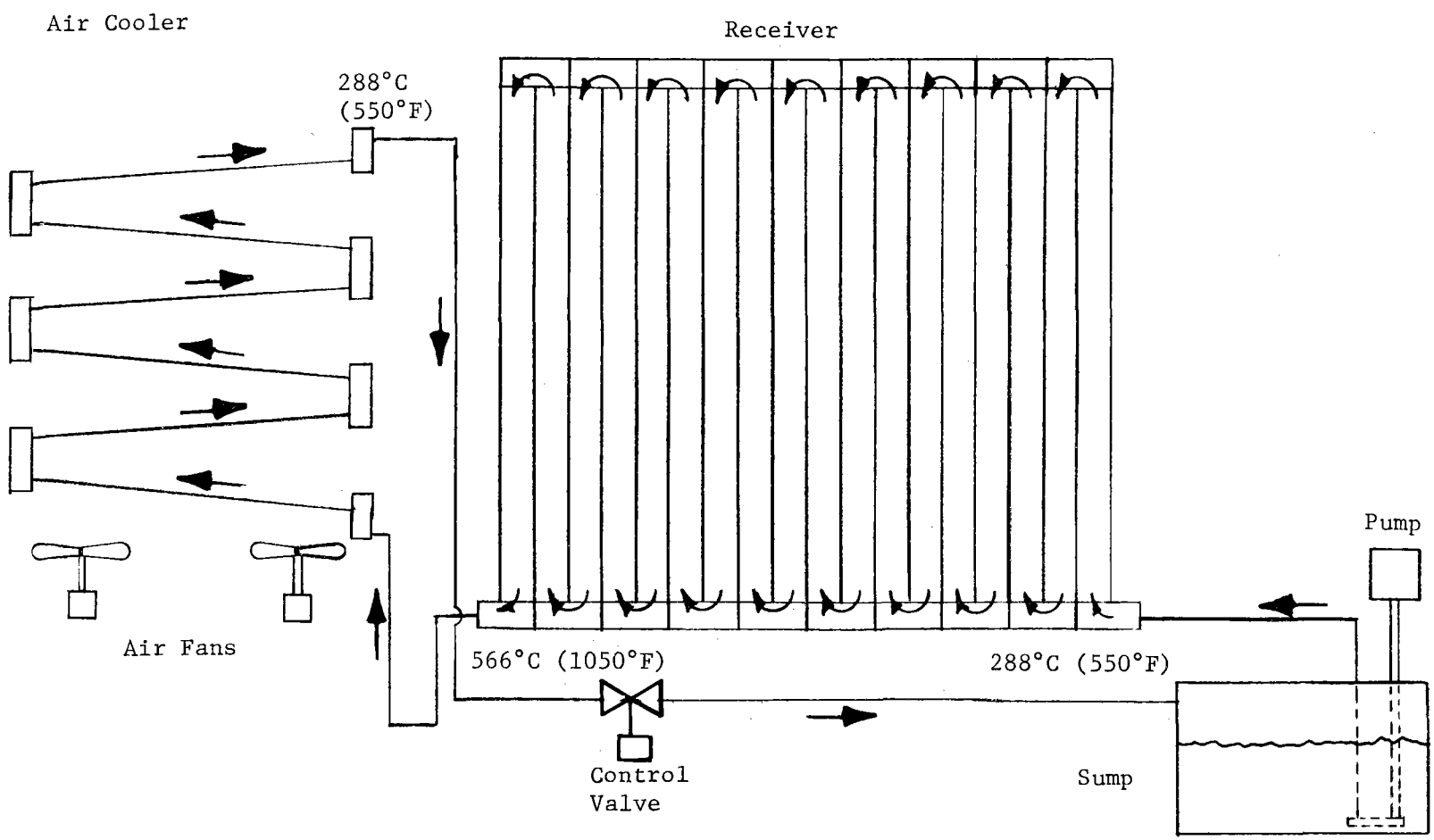

Figure 2-1 SRE Receiver

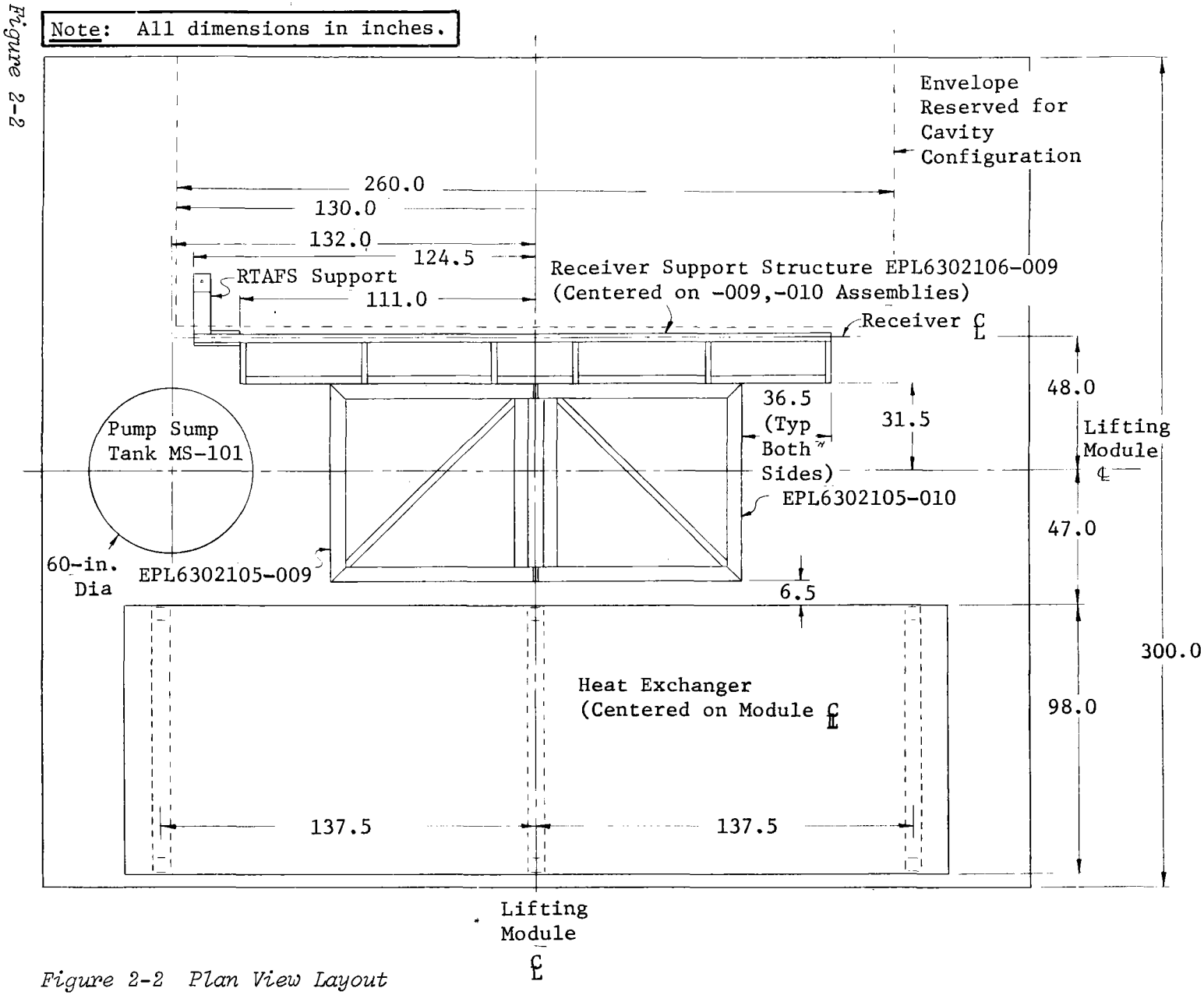

Figure 2-2 Plan View Layout

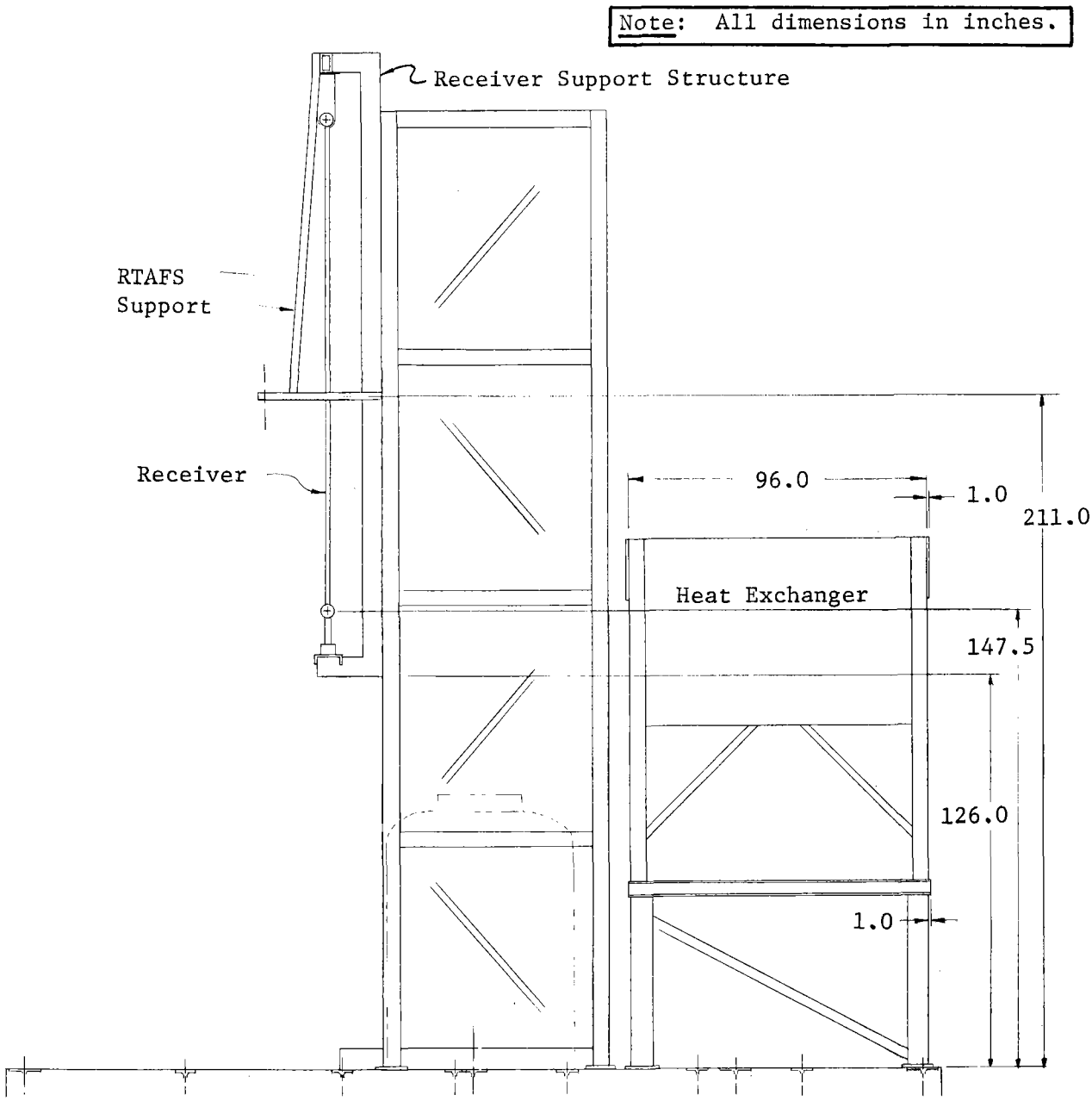

Figure 2-3 Receiver SRE Elevation Layout

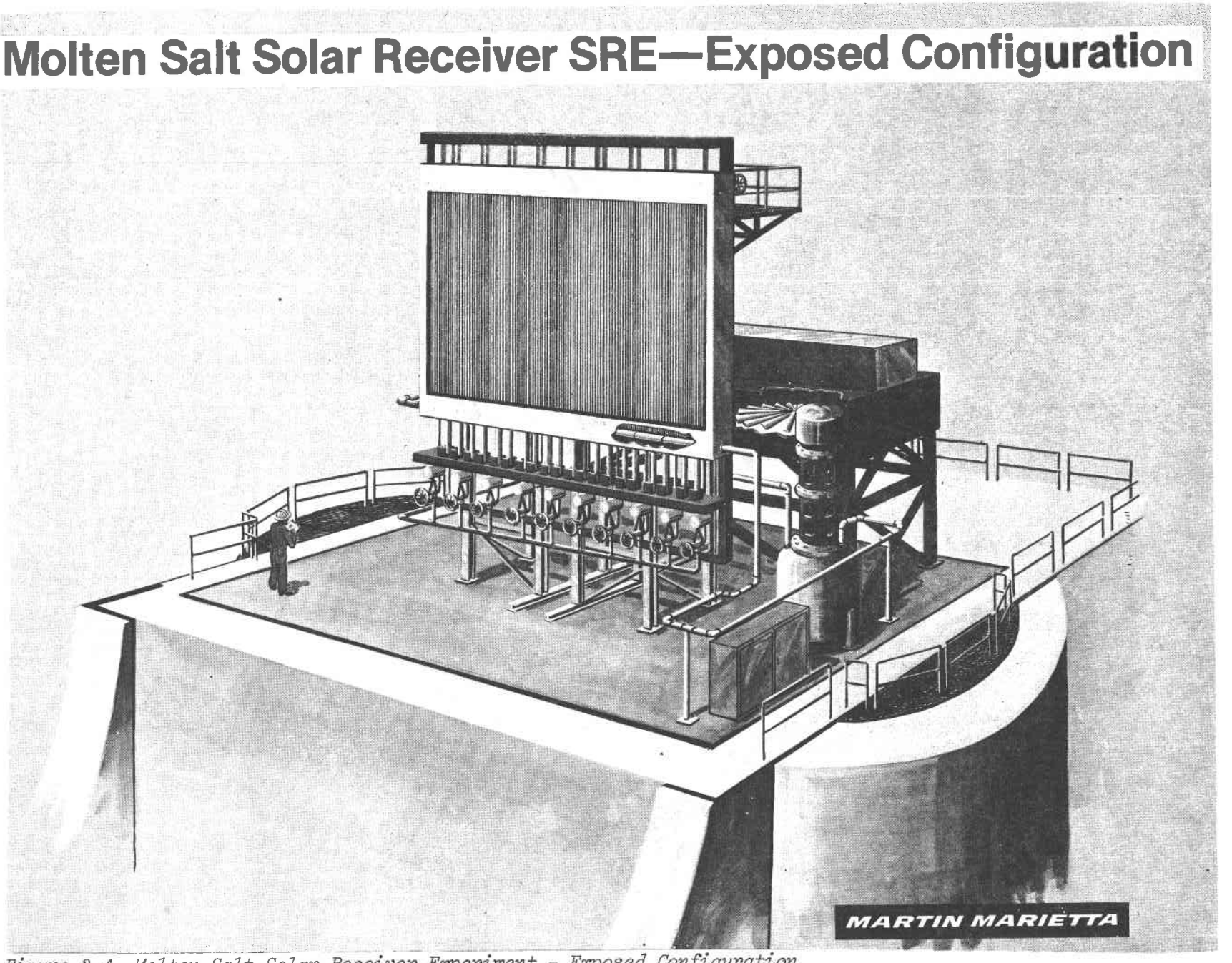

Figure 2-4 Molten Salt Solar Receiver Experiment - Exposed Configuration

Figure 2-4

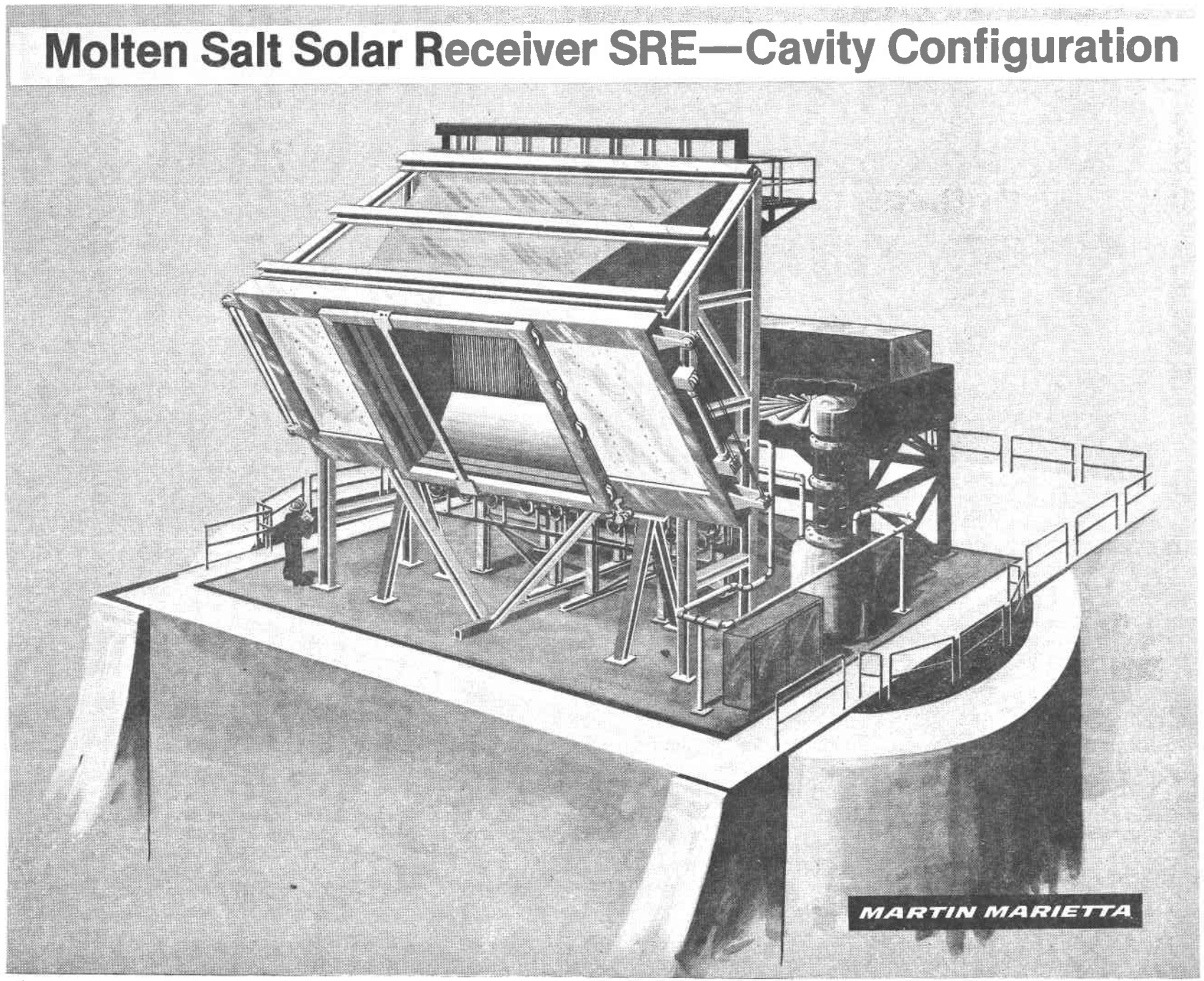

Figure 2-5 Molten Salt Solar Receiver Experiment - Cavity Configuration

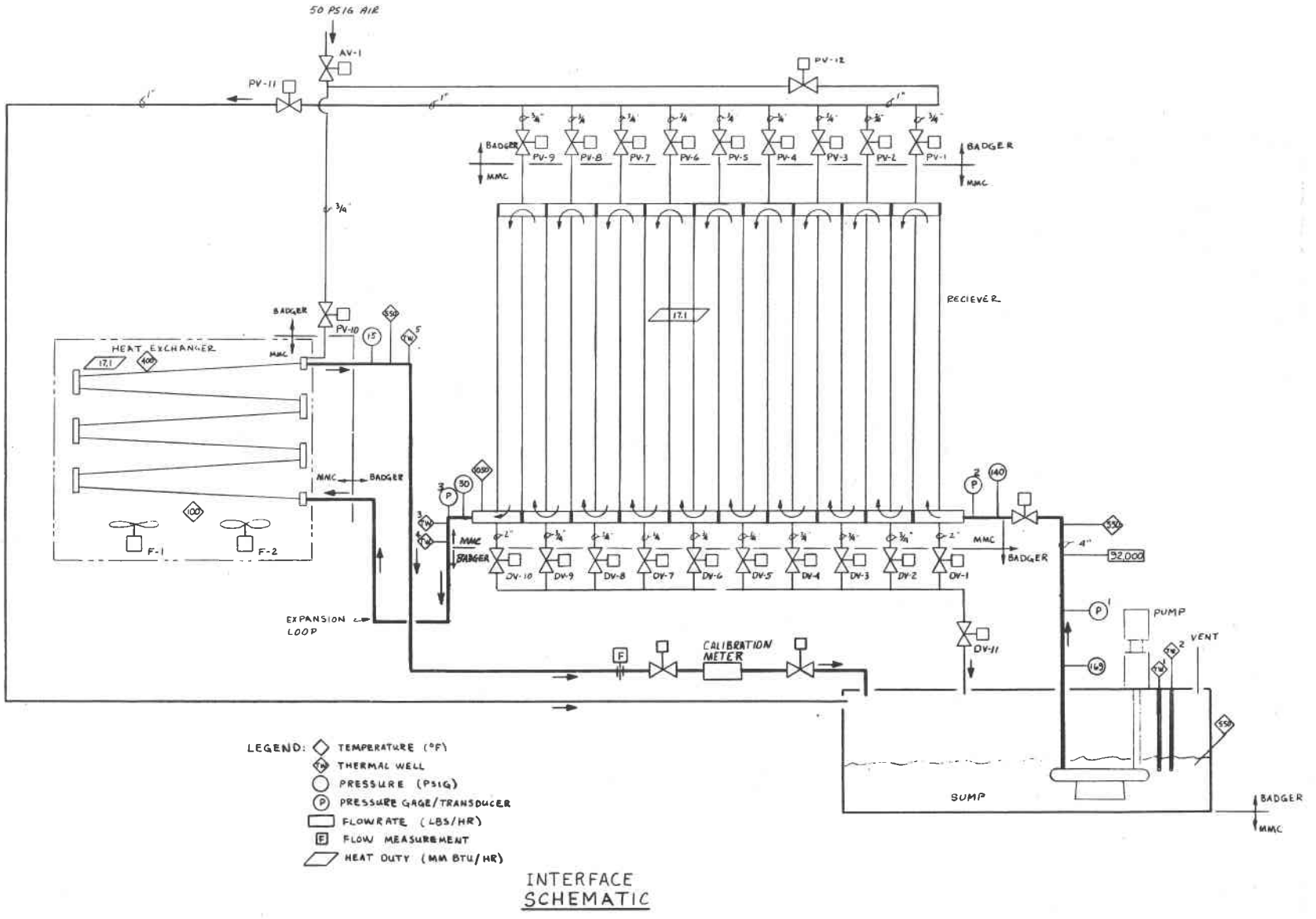

INTERFACE SCHEMATIC

Figure 2-6 Receiver SRE Schematic

Table 2-1 Receiver Experiment Parameters

Nominal Thermal Rating	- 5 MWt (17.1×10^6 Btu/h)
Active Surface Dimensions	- 3.35 m (11 ft) x 5.49 m (18 ft)
Material	- Incoloy 800
Molten Salt Temperatures	- 288°C (550°F) to 566°C (1050°F)
Average Heat Flux (Approx)	- 0.315 MW/m^2 ($\sim$100,000 Btu/h-ft^2)
Peak Heat Flux (Approx)	- 0.653 MW/m^2 ($\sim$207,000 Btu/h-ft^2)
Tube Size	- 19.1 mm dia. x 1.651 mm Wall (0.75 in. dia x 0.065 in. Wall)
Number of Passes	- 18
Number of Tubes Per Pass	- 16

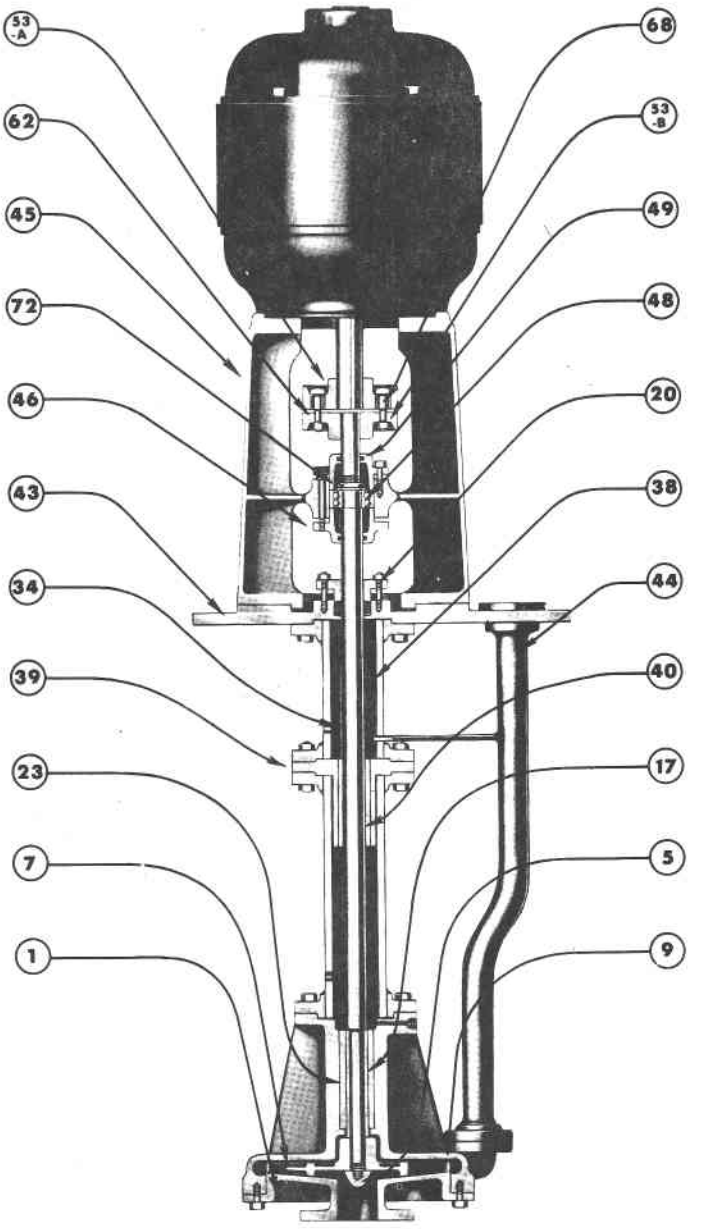

Figure 2-7 Pump Design

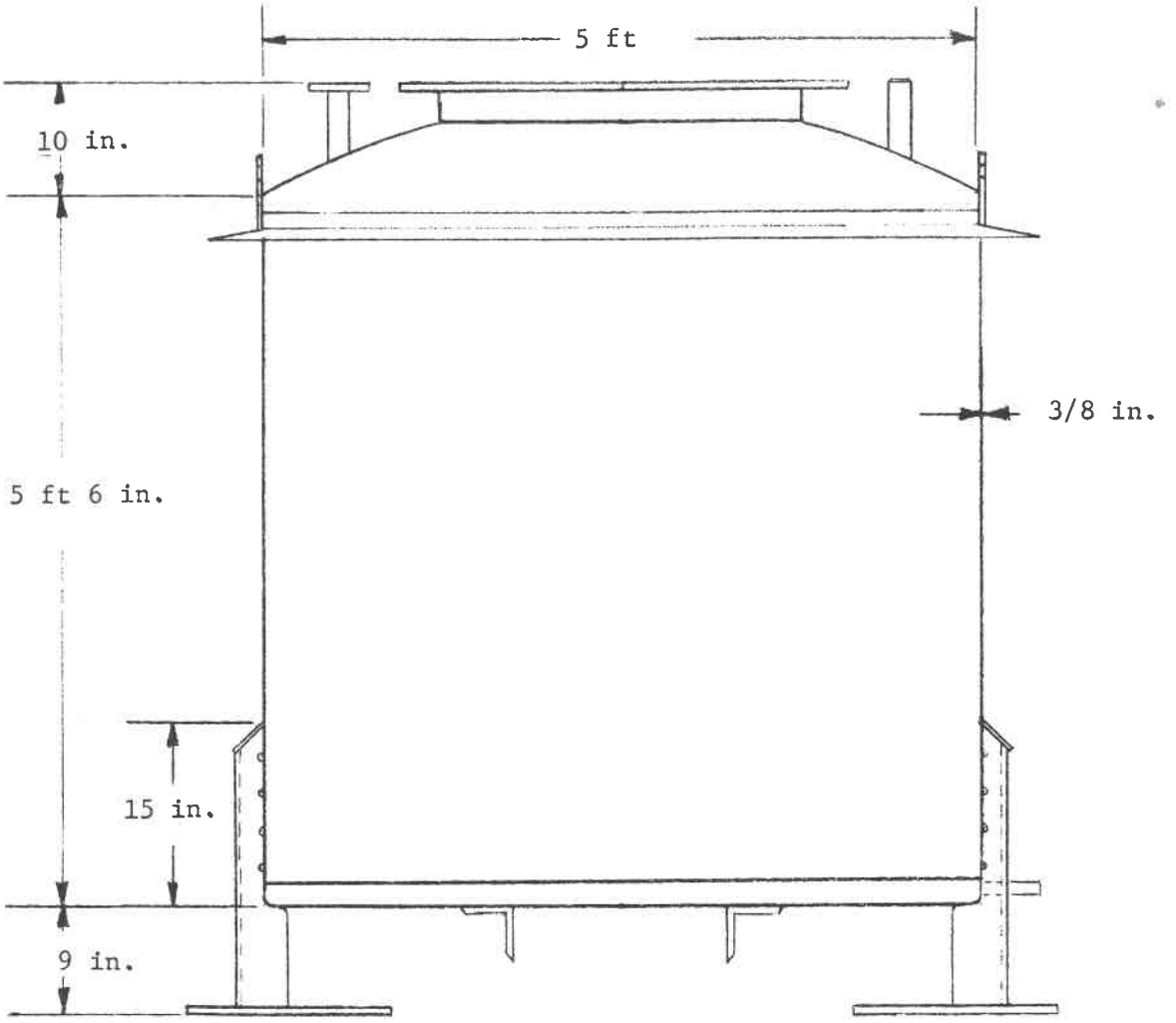

Figure 2-8 Sump Design

2.2.4 Air Cooler

The air cooler takes the molten salt from the receiver outlet at 566°C (1050°F) and cools it to 288°C (550°F). The heat is rejected to ambient air with the rejection rate controlled by varying the pitch of the fan blades. The nominal cooling capacity of the air cooler is 5 MW (17.1 x 10^6 Btu/h). A photograph of the air cooler is given in Figure 2-9, the fan enclosure is shown in Figure 2-10, and the tube bundle is shown in Figure 2-11 The fan enclosure structure (including the fans) is equipment from a previous experiment. The carbon steel tube bundle from the original air cooler was designed for water/steam service and had to be replaced with a stainless steel bundle for the molten salt system. The original air cooler as well as the replacement tube bundle is designed and fabricated by Therma Technology, Inc. The tube bundle for this experiment consists of 105 316 stainless steel tubes. The tubes are 2.54 cm (1.0 in.) OD and are finned. There are six passess through the cooler with the number of tubes per pass alternating between 18 and 17. Two fans force the air through the cooler; the fans are driven by two 14.9-kW (20-hp) motors.

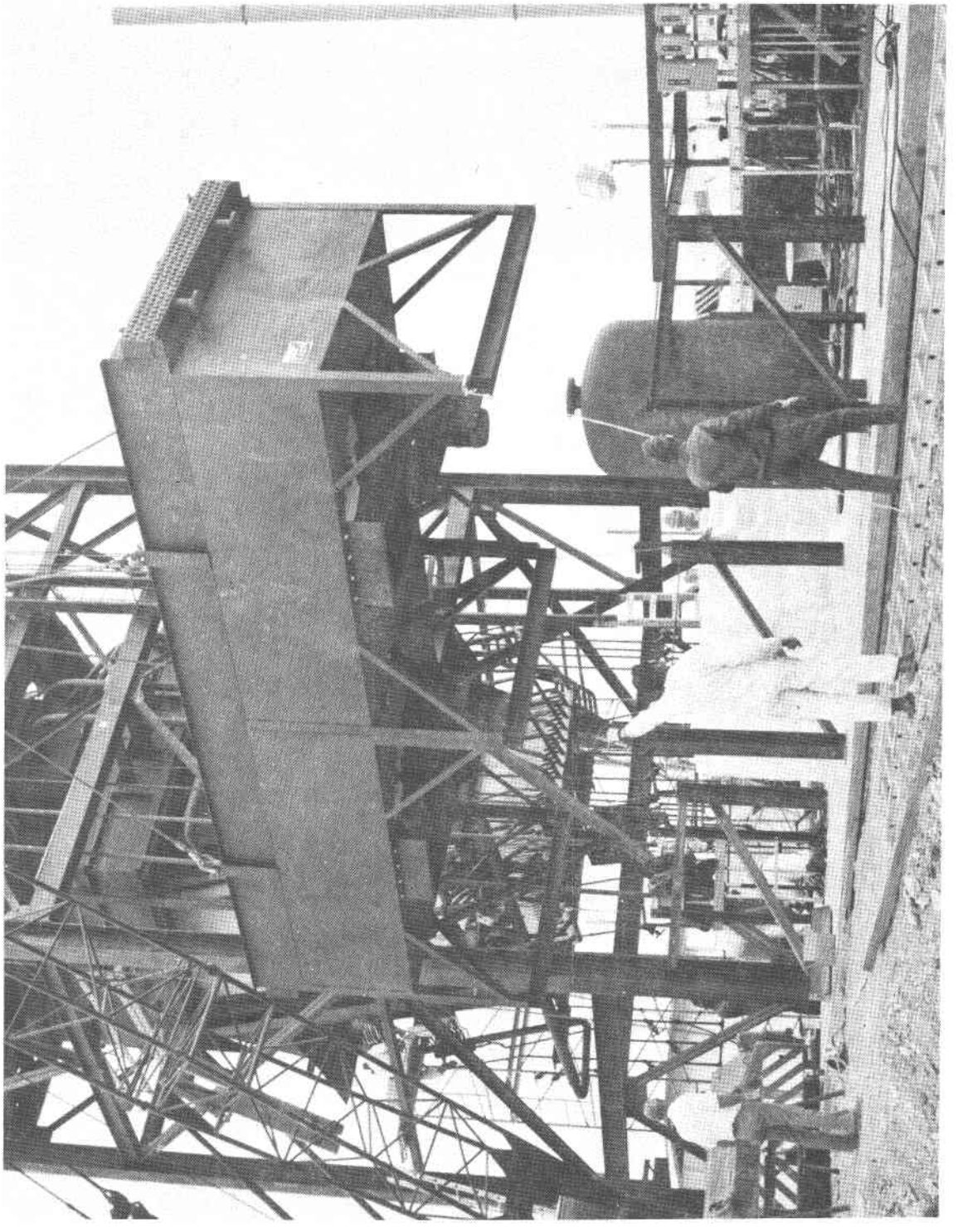

Figure 2-9 Air Cooler

Figure 2-9

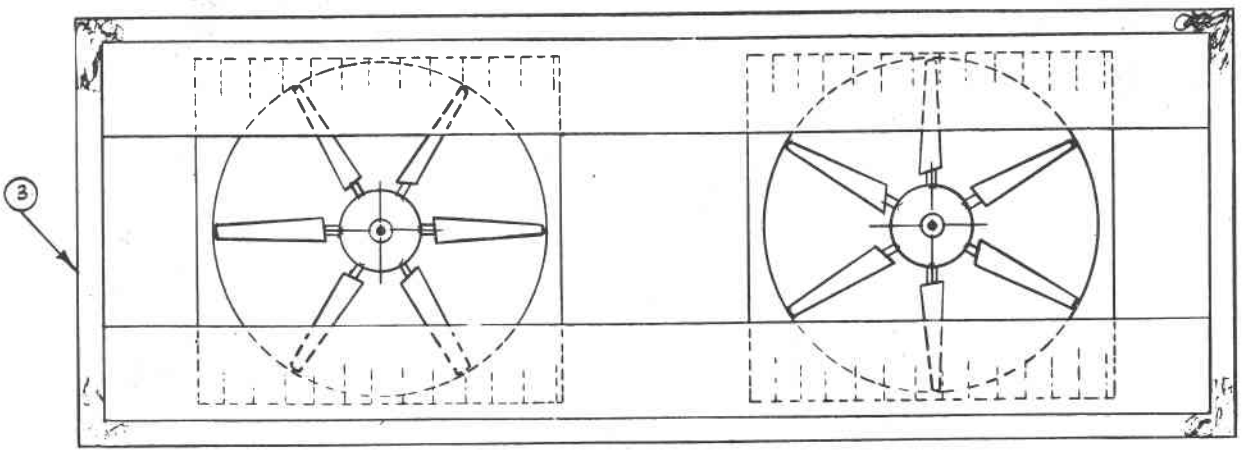

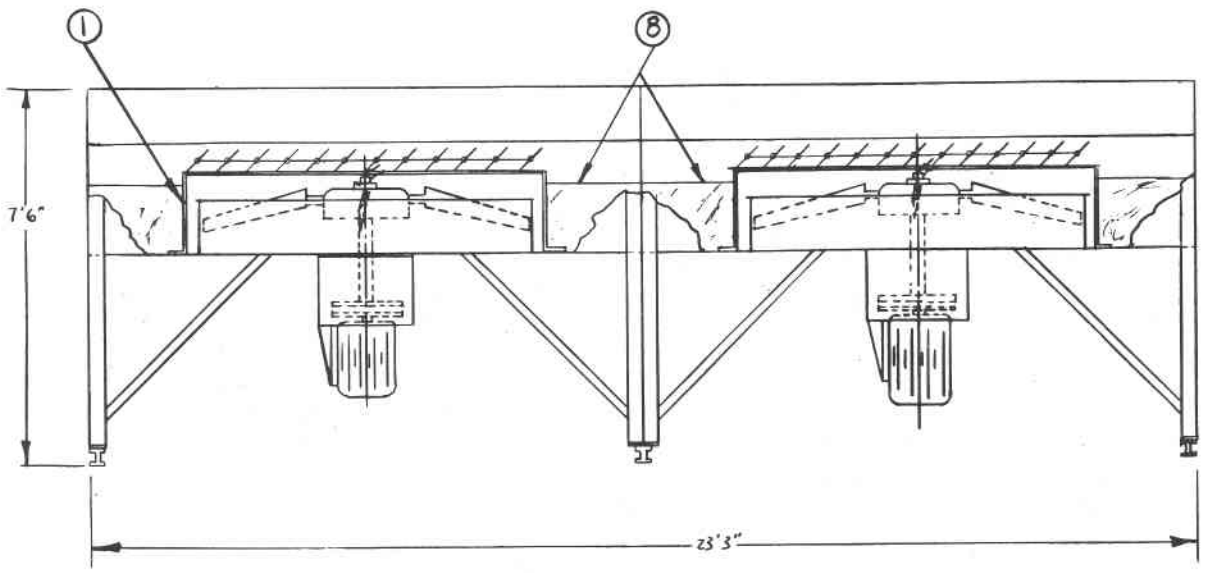

Figure 2-10 Air Cooler Fan Enclosure

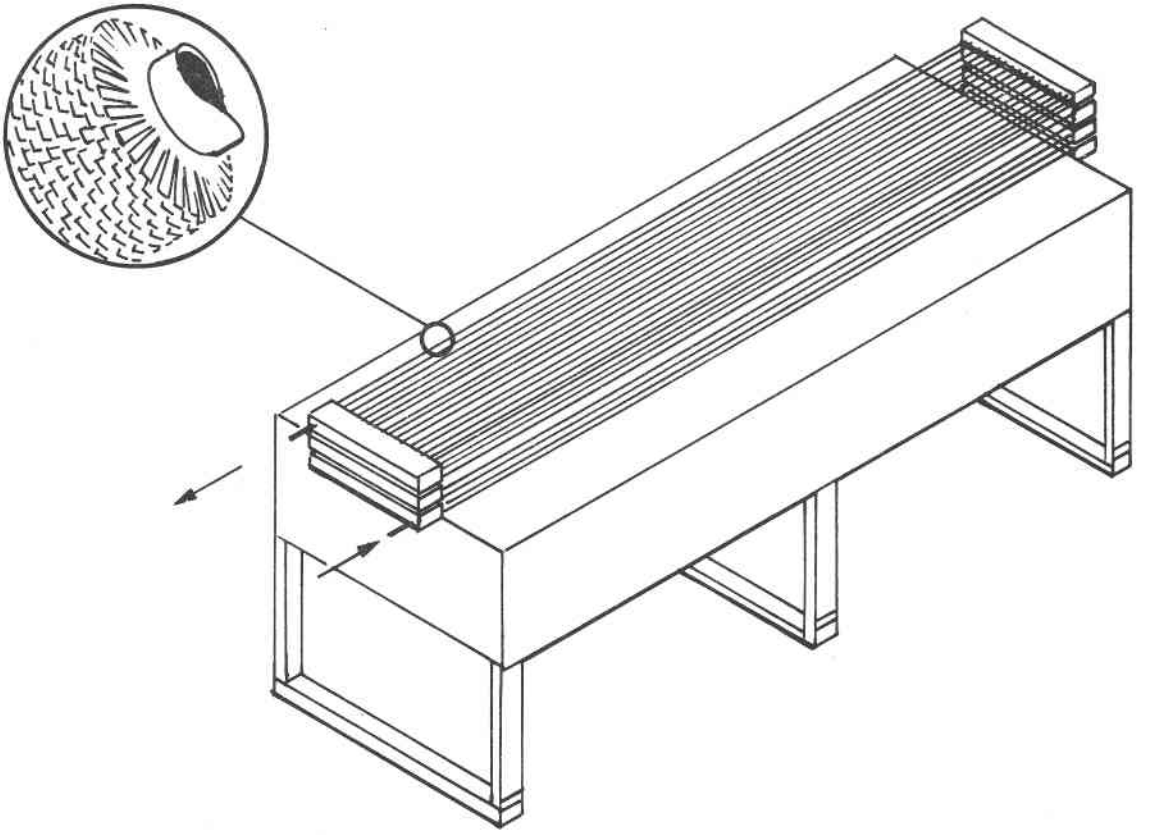

Figure 2-11 Air Cooler Tube Bundle

2.2.5 Instrumentation and Controls

The two major items that must be controlled during testing are the salt outlet temperatures on the receiver and on the air cooler. The receiver outlet temperature is regulated through the system while the air cooler outlet temperature is controlled by changing the pitch on the air cooler fan blades. Two methods are built into the system for controlling these two outlet temperatures. One method utilizes industrial controllers that employ analog feedback control loops. The control hardware associated with this method is located on the control console in the tower. The other control method is to use algorithms that are handled by the CRTF computer. The outputs of these algorithms are salt flow control valve settings and air cooler fan blade pitch settings. The basic difference between the two approaches is that the analog method uses only the outlet temperature for controlling while the algorithms employ energy balances to predict the control settings.

2.2.5.1 Temperature - The temperature sensors selected for this experiment are all type K thermocouples but vary in configuration to meet the requirements of respective installations. The sensors in the interconnecting piping and sump tank are in thermowells and consist of an ungrounded junction, stainless steel-sheathed thermocouple. The absolute temperature measurements in support of the flux gages, and the absolute and differential temperatures on and between headers, are generated by ungrounded stainless steel-sheathed units that incorporate a

1.27x1.27-cm (0.5x0.5-in.) weld tab to facilitate installation. The ungrounded junction optimizes data acquisition via electronic high-speed multiplexing.

The differential temperature measurements between headers and respective tubes incorporate a combination of ungrounded junction and grounded junction weld-on units.

Different types of insulation on the thermocouple extension wires have been selected to match various environmental conditions.

2.2.5.2 Pressure and Flow - All molten salt pressures are obtained via pressure transmitters that are strain-gage, nonindicating instruments. The transmitters produce 4- to 20-mA signals proportional to pressure. The interface at the molten salt is a stainless steel diaphragm that couples the salt pressure to a silicone-filled line that connects the diaphragm to the pressure sensor. A differential pressure is taken across the segmented orifice for flow measurements. The segmented orifice is "calibrated" throughout the test program using the weigh tank described in paragraph 2.2.6.

2.2.5.3 Displacement - Eight linear variable differential transformers are used to detect displacement on tubes induced by thermal stresses.

The valve stem of the flow control valve has also been instrumented to monitor its motion during molten salt flow.

2.2.5.4 Flux Measurement - Eighteen miniature water-cooled flux gages (calorimeters) are located in the plane of the receiver tubes with the sensors protruding from the tubes and facing the incident solar flux.

2.2.5.5 Heat Tracing - The 26 heat-tracing circuits of this experiment are manually controlled from the tower control room. Each circuit is protected by a circuit breaker and is remotely energized by power contactors.

The magnesium-oxide-packed heater cables are stainless steel-sheathed and are individually designed to meet the required length and wattage.

Numerous thermocouples support the uniform preheating of the fluid system.

2.2.5.6 Valve Control - The control valves of this system are of the pilot-operated air-actuated diaphragm-type and are equipped with dual sets of open and closed limit switches. The design permits either local or remote control of the three-way solenoid valves. Each set of limit switches provides verification of valve-stem position for either the control console or CRTF computer.

Several valves are instrumented with pressure transducers that convert the 4- to 20-mA analog control signal to supply 20.7- to 103.4-kPa (3- to 15-psig) air pressure.

The instrumentation and data acquisition sensors are given in Table 2-2.

Table 2-2 Instrumentation and Controls

Item	Quantity	CRTF Interface		Data Acquisition					Console Control
		Thermo-Couple Channel	Copper Conductor	CRTF Computer	CRTF Data Logger	Martin Marietta Multipoint Recorder	Martin Marietta Data Logger	Console Recorder	
Temperature, Absolute									
- Piping	20	20	--	8	--	--	--	3	6
- Header	19	19	--	19	--	--	--	--	--
- Header	19	19	--	--	--	19	--	--	--
- Trace Heat	110	110	--	--	--	--	110	--	--
- Cavity	50	50	--	--	--	--	50	--	--
- Flux Gage	18	18	--	18	--	--	--	--	--
Temperature, Differential									
- Header	18	18	--	18	--	--	--	--	--
- Header/Tube	288	--	576	--	288	--	--	--	--
LVDT									
- Tubes	10	--	30	10	--	--	--	--	--
- Valve	1	--	3	1	--	--	--	--	1
Calorimeter	18	--	36	18	--	--	--	--	--
Solenoids and Dual Microswitches	30	--	150	30	--	--	--	--	30
Pressure	4	--	8	4	--	--	--	--	4
Flowmeter	1	--	2	1	--	--	--	--	1
Load Cell	1	--	4	1	--	1	--	--	--

2.2.6 Weigh Tank

Since the molten salt flow rate is one of the quantities that determines the useful energy absorbed by the receiver's working fluid (energy absorbed = mass rate of flow x specific heat x temperature difference), it is important to accurately measure this quantity. A weigh tank is incorporated in the system to calibrate the segmented-orifice flowmeter. The weigh tank is attached to the structure at a single point through a load cell. All piping in and out of the weigh tank is designed so no forces can be transmitted to the tank from the piping system. This design is shown in Figure 2-12. When the valve at the bottom of the weigh tank is closed, the molten salt mass versus time is measured for approximately 35 seconds. This yields a basic salt flow rate measurement. With this flow calibration feature built into the system, it is felt that the uncertainty relative to the receiver efficiency will be on the order of ±6%.

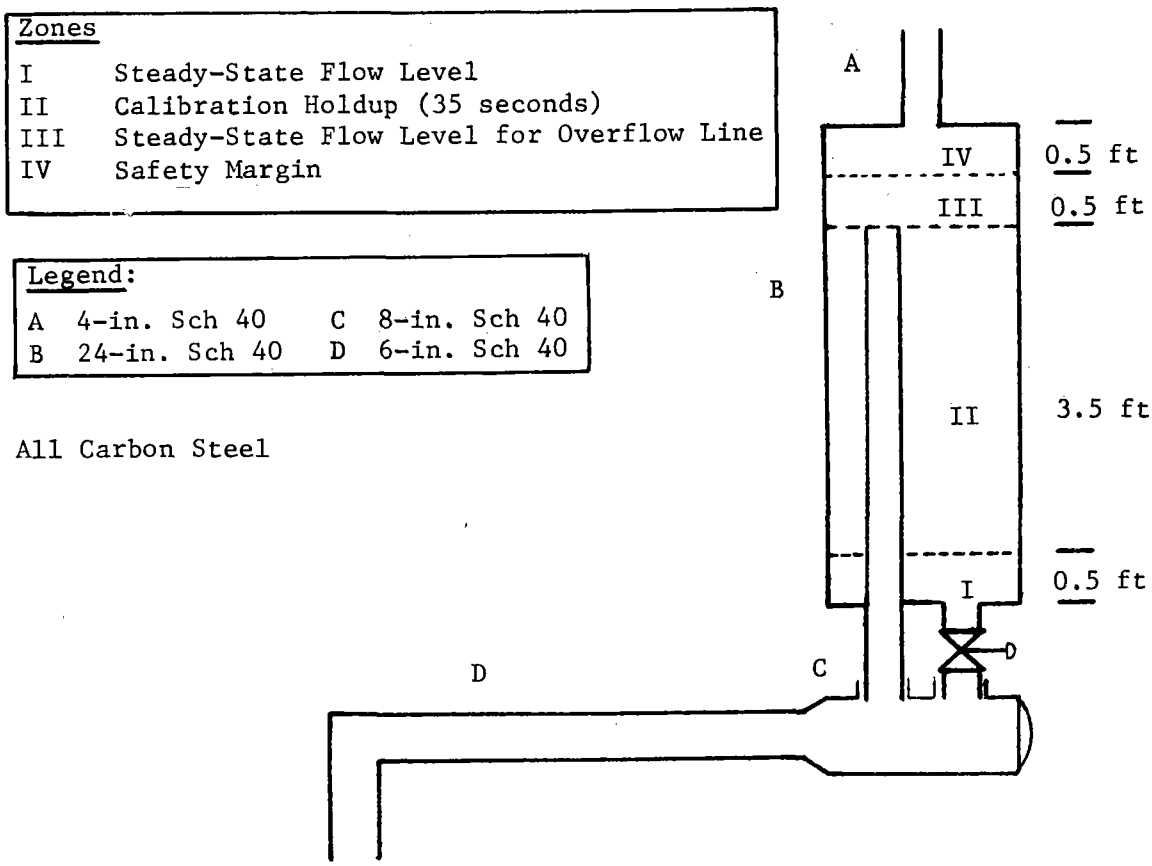

Figure 2-12 Weigh Tank

2.2.7 Control Console

The experiment control console will be located in the elevating module's data acquisition room. This console, shown in Figure 2-13, is designed to manually control and monitor the entire receiver experiment. Automatic control of the receiver outlet temperature and the air cooler is also provided for at the control console. This automatic control can be switched from the control console to the central computer.

The console contains all of the necessary manual valve control switches, process controllers and monitors, pump and cooler fan controls, valve position indicator lights, trace-heating controls, process warning annunciator system and temperature recorders. A large and complete pictorial system diagram that allows the console operator an overall view of experiment performance has been incorporated on the front panel.

All receiver control functions, as well as computer input/output control functions, interface within the console on terminal boards. Only minimal analog recording of test parameters will be made on the console with the majority being digitally recorded by data logger techniques. A heliostat field scramble command capability has been incorporated in the control circuitry.

2.2.8 Heat Transfer Fluid

The heat transfer fluid is a mixture of 60% $NaNo_3$ and 40% KNO_3. The mixture's melting temperature is 221°C (430°F).

Table 2-3 lists the properties of the salt as a function of temperature.

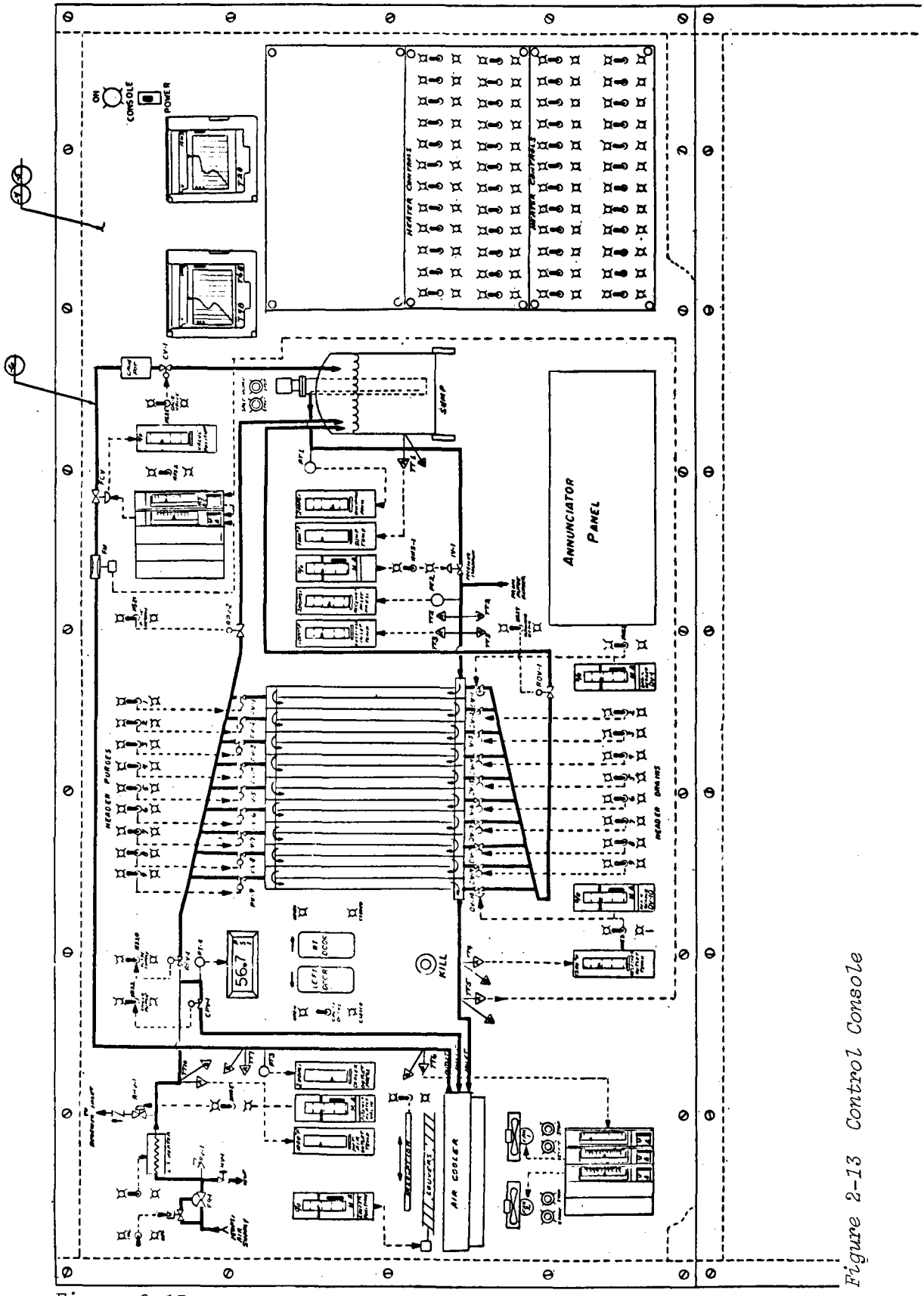

Figure 2-13 Control Console

2.2.9 Trace-Heating Subsystem

Because the salt that will be used as the working fluid for this experiment has a relatively high freezing point, trace heating is provided to all components that contact the molten salt except for the receiver tubes. Heliostats will be used to preheat the receiver tubes for the majority of the startup situations. In one of the receiver tests a portion of the receiver tubes will be insulated from radiation by the heliostats. In this case a hot-air system will be used to preheat the receiver tubes by flowing heated air through the tubes.

Table 2-3 Salt Properties

T °C (°F)	ρ, $\frac{kg}{m^3}$ (lb/ft^3)	c_p, $\frac{J}{kg\text{-}°C}$ $\frac{Btu}{lb\text{-}°F}$	$\mu \times 10^3$, Pa-s $\frac{lb}{ft\text{-}s}$	K, $\frac{W}{m\text{-}°C}$ $\frac{Btu}{hr\text{-}ft\text{-}°F}$	Pr	$\beta \times 10^4$, $\frac{1}{°C}$ $\frac{1}{°F}$
260 (500)	1928.6 (120.4)	1553.3 (0.371)	4.00 (2.69)	0.398 (0.23)	15.62	3.4 (1.89)
316 (600)	1888.6 (117.9)	1553.3 (0.371)	2.80 (1.88)	0.398 (0.23)	10.92	3.4 (1.91)
371 (700)	1848.5 (115.4)	1553.3 (0.371)	2.05 (1.38)	0.398 (0.23)	8.01	3.5 (1.96)
427 (800)	1819.7 (113.6)	1553.3 (0.371)	1.65 (1.11)	0.398 (0.23)	6.45	3.6 (2.00)
482 (900)	1789.3 (111.7)	1553.3 (0.371)	1.45 (0.974)	0.398 (0.23)	5.66	3.7 (2.04)
538 (1000)	1741.2 (108.7)	1553.3 (0.371)	1.00 (0.674)	0.398 (0.23)	3.91	3.7 (2.08)
Solid						
38 (100)	1922.2 (120)	1553.3 (0.371)		0.363 (0.21)		
93 (200)	1922.2 (120)	1553.3 (0.371)		0.363 (0.21)		

where

ρ = density

c_p = specific heat

μ = viscosity

K = thermal conductivity

Pr = Prandtl number

β = coefficient of thermal expansion

3.0 INTERFACE DEFINITION

3.1 OVERALL CRTF RESPONSIBILITIES

The Central Receiver Test Facility in Albuquerque, N.M. will:

1) Provide information defining the CRTF capabilities and safety requirements;

2) Develop the software that supports the experiment data acquisition;

3) Develop the software that supports the experiment control;

4) Provide a summary report on operation and control of the experiment;

5) Provide support in the area of data processing, including equipment and software. No manpower support will be provided except to place floating point data on tapes. CRTF's role is primarily to assist in processing the data necessary for test activities. CRTF is not responsible for data reduction relating to the reporting activities of Martin Marietta;

6) Provide special safety equipment and procedures to assure personnel and facility safety;

7) Provide design data relating to all the CRTF/experiment interfaces, including;

   a) Mechanical/structural,

   b) Electric power,

   c) Cooling water,

   d) Instrument and process air,

   e) Air heat rejection system,

   f) Instrumentation,

   g) Controls,

   h) RTAF,

   i) Net radiometer;

8) Assist in the detailed test planning to assure that test conditions and data requirements are met;

9) Assist in development of the test operating procedures and sequences and in writing the integrated test procedures;

10) Review the required experiment documentation including;

    a) Data package, including the experiment safety analysis,

    b) Test plan,

    c) Detailed procedures and training materials,

    d) As-built drawings and quality assurance records;

11) Remove molten salt receiver components from transport vehicle and position on roof of the elevating module;

12) Operate facility in accordance with approved test procedures;

13) Disconnect receiver system from CRTF interfaces, remove from elevator, and store on CRTF site.

3.2 OVERALL MARTIN MARIETTA RESPONSIBILITIES

Martin Marietta will:

1) Design and fabricate the molten salt receiver system;

2) Leak-check and perform a functional test of the receiver system using both water and molten salt;

3) Provide the following documentation to CRTF,

    a) Data package,

    b) Test plan,

    c) Detailed procedures and training materials,

    d) As-built drawings and quality assurance records;

4) Deliver the receiver system to CRTF;

5) Connect the receiver system hardware on the top level of the CRTF elevator. Any welding required will be performed by Martin Marietta using appropriately qualified welders;

6) Define flux distribution and heliostat sequencing requirements on receiver;

7) Define instrumentation, experiment control, data displays, and system kill requirements, and supply all experiment sensors, control elements, and a control console;

8) Define experiment safety requirements;

9) Operate receiver tests in accordance with approved test procedures;

10) Perform real-time and posttest receiver performance analyses;

11) Disconnect the receiver system hardware after completion of tests and prepare system for storage;

12) Write final test report;

13) Maintain receiver system during the test operations.

3.3 INTERFACES AND SPECIFIC RESPONSIBILITIES

3.3.1 Heliostat Aim Point and Sequencing

Martin Marietta will define the desired flux distributions and perform radiation anayses with the TRASYS computer program. CRTF will check the TRASYS analyses with the HELIOS computer program. Martin Marietta will transmit the heliostat requirements to CRTF in a document to be included as an addendum to this test plan.

3.3.2 Mechanical/Structural

The major structural interfaces consist of attachment of the molten salt receiver system to the top level of the CRTF elevator and attachment of the RTAF to the receiver in both the exposed and cavity configurations. CRTF will supply structural drawings of the elevator and the RTAF. Martin Marietta will design the receiver system to match the structural requirements of the elevator and the RTAF. The mechanical and structural interfaces are defined in detail by Martin Marietta drawing EPL 6302122. CRTF will provide the handling equipment for moving the experiment components from the truck to the elevator. Martin Marietta will install the system on the roof of the elevating moduel.

The basic conditions considered relative to the structural design activities were:

1) Seismic loads of 1.5 g in any lateral direction while system is inoperative;

2) 17.8-m/s (40-mph) wind during system operation;

3) 44.7-m/s (100-mph) wind while system is inoperative;

4) Solar flux only relative to the creep/fatigue analysis of the receiver tubes.

3.3.3 Electric Power

The electric power interface for the experiment will be at the designated CRTF facility power panels. The power requirements are described in Table 3-1. The physical interfaces for the electric power subsystem are defined in Martin Marietta drawing EPL 6302122.

Table 3-1 CRTF Power Requirements

Item	Voltage	Power, kW	Normalized Power, kW, 480 Vac 3Ø	Requirement for Normalized Power, kW, 480 Vac 3Ø			
				Startup or Shutdown	Normal Operation	Overnight Standby	Emergency Shutdown
Salt Pump	480 Vac 3Ø	44.8	44.8	--	44.8	--	--
Cooling Fans	480 Vac 3Ø	29.8	29.8	--	29.8	--	--
Trace Heating							
Cooler	277 Vac 1Ø	31.5	10.5	10.5	--	10.5	--
Receiver	277 Vac 1Ø	4.5	1.5	1.5	--	1.5	--
Piping	277 Vac 1Ø	17.2	5.75	5.75	--	5.75	--
Sump	277 Vac 1Ø	12.1	4	4	--	4	--
Air Heater	480 Vac 3Ø	81	81	81	--	--	--
Controls	110 Vac 1Ø	3	3	3	3	3	3
Total Service			178 kW 214 A	103.5 kW 124 A	75.3 kW 90 A	24.8 kW 29.8 A	3 kW 3.6 A

3.3.4 Cooling Water

Cooling water (40% ethylene glycol, 60% water) will be supplied to the water-cooled aperture, the RTAF, and the flux sensors that are installed between the receiver tubes. The RTAF and the water-cooled aperture are connected in series. The required flow rates and inlet pressures are tabulated.

	Maximum Flow Rate	Inlet Pressure
Water-Cooled Aperture and RTAF	1.89×10^{-2} m^3/s (300 gpm)	345 kPa (50 psig)
Flux Sensors	5.17×10^{-5} m^3/s (0.82 gpm)	345 kPa (50 psig)

CRTF will connect the utility cooling water to the inlet and outlet experiment water lines. The physical interface for the cooling water system is given in Martin Marietta drawing EPL 6302122.

3.3.5 Instrument and Process Air

Instrument air is required for all the system control valves and the diaphragms that actuate the mechanism that varies the fan blade pitch,

the air cooler louvers, the air cooler insulation cover, and the cavity doors. Process air is required to cool the salt pump bearings. The required pressures at the inlet to the receiver system and the flow rates are tabulated.

	Maximum Flow Rate	Inlet Pressure
Instrument Air	0.0071 scms (15 scfm)	103 kPa (15 psig)
Process Air, Salt Pump Bearings	0.0095 scms (20 scfm)	69 kPa (10 psig)

Martin Marietta will connect the utility air line (lines) to the experiment inlet air lines. The physical interface for the instrument and process air is defined in Martin Marietta drawing EPL 6302122.

The CRTF will supply a backup system for instrument and process air. This will be accomplished by using gas bottles attached to a three-way valve that automatically actuates when a loss of normal supply air occurs.

3.3.6 Air Heating System

The air heat rejection system will be used to heat the tubes of the receiver when the system is in the exposed configuration with the RTAF in place. For this situation the receiver tubes will be thermally insulated (front and back) in the region outside the RTAF aperture area. For this condition during startup, the air from the heat rejection system will be heated to approximately 316°C (600°F) and introduced into the receiver inlet. This air will heat the insulated tubes on the inlet side of the receiver, will be reheated by energy from the heliostats in the uninsulated portion of the receiver, and then heat the insulated tubes on the outlet side of the receiver. The air heating system will be used for the other receiver configurations during warm-up to smooth the tube temperatures. For these configurations the heliostats are the main source of heat for the receiver tubes. The air heat rejection system is also required for purging the receiver system. The maximum flow rate required is approximately 0.23 kg/s (0.5 lbm/s). This will require one deisel compressor set of the air heat rejection system. The physical interface for the air heat rejection system is defined in Martin Marietta drawing EPL 6302122.

Since system draining and purging must be accomplished quickly, particularly under emergency conditions, a backup system is required for the purge air.

3.3.7 Instrumentation

The instrumentation consists of sensors that measure temperature, solar flix, pressure, molten salt flow rate, and receiver tube displacement. The instrumentation is summarized in Table 2-2. The instrumentation list is given in Table 3-2. Data from the instrumentation will flow to

the central control room and to a console in the tower. The flow of the data is defined in the instrumentation list. Martin Marietta will handle the entire instrumentation and data system associated with the tower console. Martin Marietta will also provide the cabling from the various sensors to the CRTF central control room instrumentation interface in the tower. CRTF will provide the connectors for this interface (experiment sensors to central control room) and will make the connections.

Table 3-2 Instrumentation List

Measurement	Identification Code	Number of Channels	Experiment Location	Data Acquisition	Comments
Temperature*	TRHD1C/TRHD18C	18	Receiver Headers	CRTF Multiplexer	Differential temperatures.
	T1P1D/T16P18D	288	Receiver Tubes	CRTF Data Logger	Differential temperatures. Back side of Tubes.
	TRH1C/TRH19C	19	Receiver Headers	CRTF Multiplexer	
	TRH1L/TRH19L	19	Receiver Headers	Martin Marietta Data Logger	
	TRFGU1C/TRFGU6C	6	Receiver Tubes	CRTF Multiplexer	Back side of tubes at upper flux gages.
	TRFGM1C/TRFGM6C	6	Receiver Tubes	CRTF Multiplexer	Back side of tubes at middle flux gages.
	TRFGL1C/TRFGL6C	6	Receiver Tubes	CRTF Multiplexer	Back side of tubes at lower flux gages.
	TRSSM1L/TRSSM6L	6	Receiver Tubes	Martin Marietta Data Logger	Front side (sun side) of tubes.
	TT-1BC	1	Sump	CRTF Multiplexer	Salt temperature on lower portion of sump.
	TT-2BX	1	Receiver Inlet	Console Recorder	Salt temperature.
	TT-3BC	1	Receiver Inlet	CRTF Multiplexer	Salt temperature.
	TT-4BX	1	Receiver Outlet	Console Recorder	Salt temperature.
	TT-5BC	1	Receiver Outlet	CRTF Multiplexer	Salt temperature.
	TT-6BX	1	Air Cooler Outlet	Console Recorder	Salt temperature.
	TT-7BC	1	Air Cooler Outlet	CRTF Multiplexer	Salt temperature.
	TT-8BC	1	Sump	CRTF Multiplexer	Salt temperature on middle portion of sump.
	TT-9BC	1	Sump	CRTF Multiplexer	Salt temperature on upper portion of sump.
	TT-10BC	1	Air Heater Outlet	CRTF Multiplexer	Air temperature.
	TAIRINC	1	Air Cooler Inlet	CRTF Multiplexer	Air temperature.
	TPUMPBL	1	Salt Pump Bearing	Martin Marietta Data Logger	
	TLCELLL	1	Load Cell	Martin Marietta Data Logger	
	T1ET1L/T2ET1L	2	Sump	Martin Marietta Data Logger	Trace heating.
	T1ET2L/T2ET2L	2			
	T1ET3L/T2ET3L	2			
	T1ET4L/T2ET4L	2			
	T1ET5L/T4ET5L	4			
	T1ET6L/T3ET6L	3	Air Cooler	Martin Marietta Multipoint	
	T1ET7L/T3ET7L	3			
	T1ET8L/T3ET8L	3			
	T1ET9L/T3ET9L	3			
	T1ET10L/T3ET10L	3			
	T1ET11L/T3ET11L	3			
	T1ET12L/T7ET12L	7			
	T1ET13L/T7ET13L	7			

Table 3-2 (concl)

Measurement	Identification Code	Number of Channels	Experiment Location	Data Acquisition	Comments
Temperature	T1ET14L/T8ET14L	8	Piping	Martin Marietta Multipoint	Trace Heating
	T1ET15L/T7ET15L	7			
	T1ET16L/T3ET16L	3			
	T1ET17L	1			
	T1ET18L	1			
	T1ET19L/T3ET19L	3			
	T1ET20L/T6ET20L	6			
	T1ET21L/T8ET21L	8			
	T1ET22L/T3ET22L	3			
	T1ET23L/T9ET23L	9			
	T1ET24L/T10ET24L	10			
	T1ACL/T20ACL	20	Air Cooler	Martin Marietta Data Logger	
	TRBU1L/TRBU6L	6	Receiver Back		Upper level.
	TRBM1L/TRBM6L	6	Receiver Back		Middle level.
	TRBL1L/TRBL6L	6	Receiver Back		Lower level.
	TRC1IL/TRC24IL	24	Cavity		Interior.
	TRC1EL/TRC24EL	24	Cavity		Exterior.
Temperature	TJB1L/TJB6L	6	T/C Junction Boxes		
Pressure	PT-1C	1	Pump Discharge	CRTF Multiplexer	
	PT-2C	1	Receiver Inlet	CRTF Multiplexer	
	PT-3C	1	Receiver Outlet	CRTF Multiplexer	
	PT-4C	1	Air Heater Outlet	CRTF Multiplexer	
Pressure	FMC	1	Flow Meter	CRTF Multiplexer	Differential pressure.
Force	LCC	1	Load Cell	CRTF Multiplexer and Martin Marietta Data Recorder	
Solar Flux	QRFGL1C/QRFGL6C	6	Receiver Tubes	CRTF Multiplexer	Lower level flux gages.
Solar Flux	QRFGM1C/QRFGM6C	6	Receiver Tubes	CRTF Multiplexer	Middle level flux gages.
Solar Flux	QRFGU1C/QRFGU6C	6	Receiver Tubes	CRTF Multiplexer	Upper level flux gages.
Displacement	LVDT1C/LVDT4C	4	Receiver Tubes	CRTF Multiplexer	Displacement at vertical centerline.
	LVDTV1C	1	Receiver Inlet	CRTF Multiplexer	Vertical displacement.
	LVDTV2C	1	Receiver Outlet	CRTF Multiplexer	Vertical displacement.
	LVDTL1C	1	Receiver Inlet	CRTF Multiplexer	Lateral displacement.
Displacement	LVDTL2C	1	Receiver Outlet	CRTF Multiplexer	Lateral displacement.

*All temperature measurements utilize thermocouples. The thermocouples recorded on the CRTF multiplexer are ungrounded. All thermocouples are type-K chromel/alumel.

In Table 3-2, the final letter of the identification code defines the data acquisition equipment where the given signal terminates. C stands for CRTF multiplexer, D stands for CRTF data logger, L stands for Martin Marietta multipoint recorders or Martin Marietta data logger, and X stands for Martin Marietta console.

3.3.8 Control

The major elements or items that are controlled include the outlet salt temperature on the receiver, the outlet salt temperature on the air cooler, the salt flow rate, the various heater power levels, and the opening and closing of the purge/vent and drain valves. The controls are summarized in Table 2-2. The control list is given in Table 3-3. The system will be designed so control of the experiment is provided either by the control console in the tower or by the central control room. During the early phase of the test program, system control will be handled at the tower console. As confidence is developed relative to overall performance of the system, control will be shifted to the central control room. Martin Marietta will install and connect the entire control system.

The two major items that must be controlled during testing are the salt outlet temperatures on the receiver and on the air cooler. The receiver outlet temperature is regulated by controlling the salt flow rate through the system, while the air cooler outlet temperature is controlled by changing the pitch on the air cooler fan blades. Two methods are built into the system for controlling these two outlet temperatures. One method utilizes industrial controllers that employ analog feedback control loops. The control hardware associated with this method is located on the control console in the tower. The other control method is to use algorithms that are handled by the CRTF computer. The outputs of these algorithms are salt flow control valve settings and air cooler fan blade pitch settings. The basic difference between the two approaches is that the analog method uses only the outlet temperature for controlling, while the algorithms employ energy balances to predict the control settings.

3.3.9 Software

The software for the molten salt receiver system is concerned with data that are transmitted to the central control room. Martin Marietta is responsible for defining the software requirements while CRTF is responsible for developing the software itself. The detailed software requirements will be defined in a document to be included as an addendum to this test plan. Martin Marietta views the software to be grouped into several categories with definite priorities associated with each group. These groups are listed in Table 3-4.

3.3.10 Real-Time Aperture Flux (RTAF) System

The interface between the CRTF and Martin Marietta relative to the RTAF is the mechanical attachment of the RTAF to the molten salt receiver structure. CRTF will connect the RTAF to the receiver structure and will be responsible for providing the necessary cooling water and in-

*Table 3-3 Control List**

Function Symbol	Component Description	Component Signal	Console Controller Signal	Computer Input	Computer Output
PT-1	Pressure Transducer	4 to 20-mA Output	4 to 20-mA Input	Share	--
PT-2	Pressure Transducer	4 to 20-mA Output	4 to 20-mA Input	Share	--
PT-3	Pressure Transducer	4 to 20-mA Output	4 to 20-mA Input	Share	--
PT-4	Pressure Transducer	4 to 20-mA Output	4 to 20-mA Input	Share	--
Tweaker 1	Algorithm	0 to 10 Vdc	--	Direct	--
Tweaker 2	Adjustment	↓	--	↓	--
Tweaker 3	↓	↓	--	↓	--
Tweaker 4	↓	↓	--	↓	--
TT-1A	Thermocouple	4 to 20-mA Output	4 to 20-mA Input	--	--
TT-2A	(Spare)	--	--	--	--
TT-3A	Thermocouple	4 to 20-mA Output	4 to 20-mA Input	--	--
TT-4A	↓	↓	↓	--	--
TT-5A	↓	↓	↓	--	4 to 20 mA
TT-6A	↓	↓	↓		4 to 20 mA
TT-7A	(Spare)	--	--	--	--
TT-8A	(Spare)	--	--	--	--
TT-9A	(Spare)	--	--	--	--
TT-10A		4 to 20-mA Output	4 to 20-mA Input	--	--
FM	Differential Pressure Transducer	4 to 20-mA Output	4 to 20-mA Input	Share	--
LC	Load Cell	Millivolt	--	Share	--
IV-1	I/P	4 to 20-mA Input	4 to 20-mA Output	Share	4 to 20-mA
DV-1	↓	↓	↓	↓	↓
DV-10	↓	↓	↓	↓	↓
FAN-1	↓	↓	↓	↓	↓
FAN-2	↓	↓	↓	↓	↓
RHV-1	↓	↓	↓	↓	↓
LONV	↓	↓	↓	↓	↓
FCV	↓	↓	↓	↓	↓
FCP	Linear Potentiometer	4 to 20-mA	4 to 20-mA	Share	--

Table 3-3 (concl)

Function Symbol	Component Description	Component Signal	Console Controller Signal	Computer Input	Computer Output
DV-1	Dual Contact Closures and Solenoid	dc volts	Lights	Direct	--
DV-2					--
DV-3					--
through					
DV-10					--
PV-1					--
PV-2					--
PV-3					--
through					
PV-9					--
IV-1					--
RHV-1					--
FCV-1					--
ROV-1					--
RPV-1					--
RPV-2					--
CPV-1					--
CV-1					--
PR-1					--
INSUL					--
CAV. Door-R					--
CAV. Door-L					--
Loss of Pneumatics	Pressure Switch	--	--	--	Warning
Computer "Watchdog"	--	--	--	--	Warning
Receiver Tube Over Temp	--	--	--	--	Kill

*Symbols are identified in Figure 2-13.

strumentation cabling as required. Martin Marietta will provide the structure to which the RTAF is mounted. The mechanical interface is defined in Martin Marietta drawing EPL 6302122.

3.3.11 Backup Systems

Backup systems must be provided to allow the receiver system to be shut down safely after failure of the primary electrical or pneumatic systems. Also if the primary heliostat control system fails, there must be provisions for defocusing the heliostats off the receiver. Martin Marietta will define the requirements for these systems. The specifics of how these systems are to be switched will be coordinated with CRTF and included in the test procedure.

Table 3-4 Software Grouping

Priority	Software
1	Basic data in engineering units (temperature, flow rates, pressures, displacements, and power input), control displays, control signals, alarms, kills, and limit monitoring.
2	Performance data, - Receiver power output, m Cp T, - Solar input (from RTAF) in Btu/h-ft^2, - Flow rate computed from weigh tank measurements.
3	Data averaging and max/min discrimination (average temperatures on each pass of receiver and determine maximum and minimum temperatures).
4	Generation of system schematic with key temperatures, pressures, and flow rates shown.
5	Overall system heat balance calculations.

3.3.11.1 Electrical Backup - The primary and backup electrical systems are defined as tabulated.

	Primary	Backup
Heliostat System	Diesel Generator	Commercial
Tower Experiment		
Power	Commercial	None
Control	Commercial	Battery

Both primary and backup electrical systems will be provided by and will be the responsibility of CRTF, except the experiment backup battery that will be provided by and will be the responsibility of Martin Marietta.

3.3.11.2 Pneumatic Backup - CRTF will provide two K-bottles with regulators and switchover valves and plumbing as a backup system for the instrument air.

Since Martin Marietta will require only one of the three compressors used to provide heating system air, the two unused compressors will be the pneumatic backup for the heating system air.

3.3.11.3 Heliostat Sequencing Backup - Heliostat sequencing is computer-controlled from the MCS and is therefore powered by a diesel generator with commercial power as backup. Should computer control be lost, the heliostats will defocus and sequence to the stowed position. It will be CRTF's responsibility to provide primary and backup heliostat sequencing to defocus the heliostats during control system failure.

3.3.12 Personnel Safety

The design, manufacturing, and operation of the research experiment will be in strict compliance with the latest issue of the Operating and Safety Procedures for CRTF Solar Operations document prepared and maintained by CRTF personnel.

Specific design features oriented toward personnel safety include:

1) A configuration envelope consistent with the boundaries of the elevating module so all assembly, checkout, and reconfiguration of the experiment can be accomplished at ground level;

2) Provisions for containment of molten salt spillage on the top of the tower (CRTF will construct a dam around the edge of the elevating module and around roof penetrations. Martin Marietta will install a salt containment dam around the sump);

3) Walkways, platforms and handrails for safe access to manual override valves, insulation attachments, etc that must be used during emergency situations;

4) Attachments for safety hooks that can be slid across structural members such as the RTAF sensor bar.

The following operational safety provisions will be included in the Martin Marietta test procedures as a minimum:

1) Personnel accountability system - The Martin Marietta test engineer will be responsible for knowing the whereabouts of all Martin Marietta personnel assigned to the test during both sun-on and sun-off operations;

2) A buddy system will be strictly enforced for access to the top of the tower;

3) Flags such as "Note", "Caution" and "Warning" will be incorporated in the test procedures to alert operating personnel to potential hazards or requirements for emergency steps to be taken during all test operations;

4) Preplanned and rehearsed emergency procedures will be established to effect safe shutdown of equipment should the operations/safety engineer or console operator exercise his option to terminate the test due to safety concerns;

5) Personnel performing duties on the top of the tower will be in constant audio communication with the Martin Marietta test engineer or other supervisory personnel designated by him;

6) CRTF will provide lightning protection for the experiment;

7) No personnel will be allowed on the tower top when the heliostats are not in the stow position.

3.3.13 Maintenance

Martin Marietta will provide a maintenance schedule for the molten salt receiver system components and will provide the maintenance materials.

3.3.14 Spares

Martin Marietta will provide spare parts for the critical components of the receiver experiment system.

3.3.15 Audio Communication System

Audio communication is required between the central control room and the control console in the tower. CRTF will provide this communication system.

4.0 TEST PROGRAM

All of the tests defined in this section will be performed at the top level of the tower with the exception of the checkout tests. The system-level checkout tests will be conducted at ground level with the receiver system mounted on the roof of the elevating module. A portion of the component-level checkout tests will be conducted in Denver.

There are three basic test configurations--the exposed configuration without the real-time aperture flux (RTAF) system, the exposed configuration with the RTAF and the cavity configuration with the RTAF. Because of inadequate space and the possibility of limited crane capability on the top level of the tower, the elevating module will bring the experiment to ground level for each changeover to a different test configuration. The tests have been sequenced to minimize this operation. Under the present plan the experiment will be brought to ground level after the cavity performance tests, the exposed performance tests, and the exposed convection tests.

Data will be taken and recorded from all installed sensors for all tests, other than the checkout tests, at the data system's maximum scan rate. The data will include:

1) Molten salt temperatures and pressures;

2) Receiver tube temperatures;

3) Receiver insolation from the flux sensors installed between the receiver tubes;

4) Receiver tube deflections;

5) Molten salt flow rates.

Special data collection requirements such as RTAF measurements and weigh tank data will be specified, as needed, for individual tests. All the data will be presented in English units.

General requirements that apply to all solar tests are that the first two rows of heliostats will not be used and that salt will be maintained in a molten state in the sump throughout the entire test period.

It is also important to note that all backup systems will be checked to verify that they function properly. This will be done before the system-level testing.

Any of the tests performed on the tower top may also be combined during a given test day without having to drain and fill the system between tests. The only exceptions to this are the first two tests on the

tower top, 1PC-1 and 2PC-2. These tests will be performed on separate days so ample time is available to inspect the data and reflect on the operational characteristics of the system.

In this test plan the convection tests are called out as separate tests. However the convection tests will be performed at the end of each test day, starting with 3PC-3, if conditions are appropriate. This approach will allow as many wind conditions as possible to be included in the convection data base.

4.1 CHECKOUT TESTS

The system-level checkout tests will be conducted at ground level with the receiver system mounted on the roof of the elevating module. A portion of the component-level checkout test will be conducted in Denver. All tests other than the checkout tests will be conducted with the receiver system at the 61-m (200-ft) level.

The checkout test objectives are:

1) Check quality of system fabrication and assembly;

2) Check performance of subsystem components;

3) Perform functional test of system with particular attention given to filling and draining operations;

4) Provide test crew training.

4.1.1 Test CO-1 - Airflow Distribution Test for Air Cooler

This test has been conducted in Denver. The air cooler unit was originally designed for a water/steam solar system. The modifications of this original unit to make it compatible with the molten salt system include a new tube bundle and the removal of three of the six blades on each fan. First the fans were demonstrated to be balanced in the three-blade configuration. Then an anemometer was used to check the flow distribution on the downstream side of the tube bundle. This test showed there was significant blowby between the outer tubes and the walls of the bundle. Therefore a baffle was installed along the walls of the bundle just below the first tube pass. This readjusted the flow so it was uniform and so the maximum airflow rate was demonstrated to be consistent with the requirements. Total airflow was determined at several fan blade settings, yielding a curve of fan diaphragm pressure vs airflow rate. (The diaphragm pressure sets the fan pitch.)

4.1.2 Test CO-2 - Hydrostatic and Leak Check

Hydrostic tests of the following subsystems have been conducted in Denver per the ASME process plan:

1) Receiver tubing;

2) Headers;

3) Purge and drain lines.

At the conclusion of the hydrostatic test the above were stamped as an ASME-Coded Boiler in accordance with Section I of the ASME Code. The hydostatic test was conducted with water at a pressure of 2.5 MPa (364 psig) and at ambient temperature. This hydrostatic test was witnessed by Martin Marietta Quality Control personnel and the ASME Inspector.

A system-level bubble leak check of the sybsystems was performed before the hydrostatic test and will be performed with the completed system after assembly and installation at CRTF. The leak checks conducted in Denver were run with nitrogen gas at 1.1 Pa (160 psig) and ambient temperature and in accordance with appropriate safety precautions. The final system leak check will be conducted before the system water flow functional test at 862 Pa (125 psig) and ambient temperature with nitrogen gas.

4.1.3 Test CO-3 - Sump and Air-Cooler Heaters

A checkout of the sump and air-cooler heaters was conducted in Denver. The purpose was to verify their operation and establish their capabilities. Power was applied to the heaters and the temperature slowly increased to 316 $\pm$ 14°C (600 $\pm$ 25°F).

4.1.4 Test CO-4 - Thermocouples

End-to-end checkouts of all thermocouples will be conducted to verify that the junctions and connections are completed and that no opens exist. This checkout will also verify the proper location of each thermocouple. A heat gun will be used to apply heat to all accessible thermocouple junction and the response will be verified using the data system.

4.1.5 Test CO-5 - System Trace Heaters

To allow for system warmup before initiation of the salt flow, all subsystems with the exception of the receiver tubes will be heat-traced. All subsystems will have power applied to the heat tracing to establish a temperature of 316 $\pm$ 14°C (600 $\pm$ 25°F).

While the system is at temperature all thermocouples will be monitored to verify there are no cold spots.

4.1.6 Test CO-6 - Functional Valve Operation

All subsystem valving will be functionally operated and checked out to verify proper positioning and actuation. Any valves that do not seat properly will be adjusted. The outputs of all electropneumatic controllers will also be verified.

4.1.7 Test CO-7 - Electrical Control System

Before conducting the functional water flow test, as many system controls will be verified as possible. Numerous controls will already have been verified during previous checkouts. An example is valve operation. Items such as outlet temperatures and heater power levels will be checked out as much as possible but will require the functional operating temperature for final verification. All adjustments that can be will be made before that test. These checkouts will be made just before initiating the functional tests and will include the completed tower control console checkout and central computer checkout.

4.1.8 Test CO-8 - Functional Test with Water

The complete molten salt control receiver will be assembled on the roof of the elevating module with all of its subsystems operational. Before flowing molten salt, it will be necessary to check out the operation with water. This procedure will accomplish the following objectives:

1) Verify pump operation;

2) Verify system flow rate vs pressure drop predictions;

3) Check calibration of segmented-orifice flowmeter with weigh tank;

4) Verify valve sequencing and operation;

5) Provide partial test procedure checkout;

6) Develop fill and drain procedures;

7) Provide training to test personnel;

8) Perform rough tuning of console controllers.

The segmented orifice will be initially checked out during this functional water test. With the orifice flowmeter in line, the weigh tank will be suspended from a load cell. After the water flow has stabilized, the weigh tank outlet valve will be closed and a reading of the load cell recorded. Water will be allowed to flow into the weigh tank with a load cell reading taken at approximately 6-second intervals. The weigh tank data will be converted to flow rate and then compared with the segmented-orifice flow rate measurements. This operation will be conducted for flow rates of approximately 25, 50, 75 and 100% of maximum flow. Two data points at each flow setting will be obtained. During the functional molten salt flow test, this operation will be performed as previously described except that in this case the test medium will be molten salt.

At the conclusion of this test, the system must be completely purged and drained.

4.1.9 Test CO-9 - Functional Test with Salt

A functional molten salt test will be conducted following the purging and drying operations. This test will verify the system's capabilities to flow molten salt at 288°C (550°F), establish a 5.68×10^{-3} to 6.94×10^{-3} m^3/s (90- to 110-gpm) flow rate, and check for any leakage or cold spots with molten salt. The air heater system will also be checked out to establish its capability for heating the receiver tubes to approximately 288°C (550°F) at a flow rate of approximately 0.23 kg/s (0.5 lbm/s). Electric power supplied by the CRTF electrical system will provide the heating source and the air heat rejection system will be used as the air supply. The procedural steps necessary to accomplish this test are:

1) Completely purge and dry the system;

2) Install and melt salt in the sump;

3) Adjust all trace-heater controls to slowly achieve 288°C (550°F) or greater on all components except the receiver tubes;

4) Bring receiver tubes to approximately 299°C (550°F) using the air heat rejection system;

5) Open the purge and drain valves when all systems are stabilized at 299°C (550°F);

6) Start the salt pump and allow the system to fill with molten salt;

7) Close the purge and drain valves when all tubes are full of molten salt;

8) Allow system to flow molten salt while performing the following operations,

   a) Inspect for any leaks,

   b) Conduct segmented-orifice flow calibrations,

   c) Check for any cold spots,

   d) Check flow control valve operation while operating both from the tower control console and the central computer,

   e) Check all instrumentation;

9) Shut off salt pump, open drain valves and activate purge system;

10) Turn off all trace heaters except for those on the sump;

11) Secure the system.

4.2 PRELIMINARY CHECKOUT PROCEDURES - CAVITY

The receiver configuration and test conditions are:

1) Cavity configuration with the entire receiver illuminated, 3.35x 5.49 m (11x18 ft);

2) The real-time aperture flux (RTAF) system attached to the receiver;

3) The first two rows of heliostats not used;

4) Single-point heliostat aim strategy used with the maximum flux limited to 69.3 W/cm2 (220,000 Btu/h/ft2).

The test obejctives are to:

1) Check out system and components;

2) Familiarize the test crew with system operation;

3) Determine system operational characteristics;

4) Demonstrate control stability;

5) Check out instrumentation;

6) Check out software;

7) Check out drain and purge system;

8) Demonstrate emergency shutdown operation;

9) Demonstrate recovery from simulated cloud passage.

4.2.1 Test 1 PC-1 - Partial Load, Tower Console Control

Outlet receiver temperature will be slowly increased to a maximum of 482°C (900°F) with solar input limited to approximately 1/2 of maximum. The air-cooler outlet temperature and receiver inlet temperature will be maintained at approximately 343°C (650°F). System control will be provided by the tower control console.

The specific test conditions are:

1) Test will be performed during periods when shadowing of heliostat field by clouds is not probable;

2) Test will be terminated if shadowing of heliostat field by clouds is likely;

3) Experiment control will be handled by tower console.

The specific test objectives are to:

1) Familiarize test crew with system operations;

2) Determine molten salt flow distribution through the receiver tubes at partial load;

3) Calibrate segmented-orifice flowmeter using the weigh tank;

4) Demonstrate receiver outlet temperature control and air-cooler control via the tower control console;

5) Demonstrate that the receiver can be brought to approximately 1/2 of its maximum power by slowly increasing the outlet temperature;

6) Perform an initial tuning of the console controllers with molten salt.

The test sequence is as follows:

1) Heat all molten salt lines, air cooler, receiver headers and sump to approximately 343°C (650°F). The salt will have been previously melted in the sump and the sump temperature maintained at approximately 343°C (650°F) continuously. During system heatup the air-cooler louvers and top insulation will be in their closed positions;

2) Heat receiver tubes with heliostats so the minimum tube temperature is greater than 288°C (550°F) while the maximum tube temperature is less than 593°C (1100°F). The particular heliostats and the aim strategies used for this operation will be chosen so the flux distribution on the receiver tubes is as uniform as possible. Also during this step the air heat rejection system will supply air at 316°C (600°F) to the interior of the receiver tubes. This air at a flow rate of 0.23 kg/s (0.5 lb/s) will tend to smooth the receiver tube temperatures;

3) Fill the system with molten salt;

4) Monitor the trace-heating system and shut off heaters as required;

5) Start molten salt flow through system. Set flow at rate consistent with receiver's maximum power;

6) Monitor trace-heating system and shut off heaters as required;

7) Bring on line 20 additional heliostats. The heliostats used for this operation will be chosen so the basic flux distribution is relatively uniform across the majority of the receiver's surface;

8) Open the air-cooler louvers and top insulation and start fans with zero pitch on fan blades. Adjust pitch on fan blades until air-cooler outlet salt temperature is approximately 343°C (650°F) and steady;

9) Bring on line 20 additional heliostats as in item 7;

10) Adjust pitch on fan blades until air-cooler outlet temperature is approximately 343°C (650°F) and steady;

11) Repeat items 9 and 10 until approximately 110 heliostats are operating;

12) Check temperature distribution on all receiver tubes;

13) Perform a molten salt flow calibration test using the weigh tank;

14) Adjust molten salt flow rate until receiver outlet temperature is approximately 482°C (900°F), maintaining air-cooler outlet at approximately 343°C (650°F);

15) Check temperature distribution on all the receiver tubes;

16) Tune console controllers;

17) Perform a molten salt flow calibration test using the weigh tank;

18) Switch air cooler to automatic control on the tower control console with the air-cooler outlet salt set point temperature at 343°C (650°F) and operate for at least 10 minutes;

19) Return air cooler to manual control;

20) Switch receiver outlet temperature to automatic control on the tower control console with the set point at 482°C (900°F) and operate for at least 10 minutes;

21) Switch air cooler to automatic control on the tower control console with the air-cooler outlet salt set point temperature at 343°C (650°F) and operate for at least 10 minutes;

22) Bring slowly off line all heliostats except those defined in item 2. During this operation the air cooler will be on automatic control while the receiver outlet temperature will be on manual control;

23) Operate system until the molten salt temperature throughout the system is approximately 288°C (550°F);

24) Simultaneously close main control valve, shut off molten salt pump, close air-cooler louvers, and close air-cooler top insulation;

25) Turn on purge air heater and drain molten salt from system into sump;

26) Bring off line the remaining heliostats;

27) Secure system.

4.2.2 Test 2 PC-2 - Partial Load, Central Computer Control

Outlet receiver temperature will be slowly increased to a maximum of 482°C (900°F) with solar input limited to approximately one-half of maximum. The air-cooler outlet temperature and receiver inlet temperature will be maintained at approximately 343°C (650°F). System control will be provided by the central computer.

The specific test conditions include:

1) Test will be performed during periods when shadowing of heliostat field by clouds is not probable;

2) Test will be terminated if shadowing of heliostat field by clouds is likely;

3) Experiment control will be handled by the central computer.

The specific test objectives are to:

1) Familiarize test crew with system operation;

2) Demonstrate receiver outlet temperature control and air-cooler control via central computer;

3) Determine the transient response of the receiver to step changes in the input power.

The test sequence is the same as Test 1 PC-1 (4.2.1) except for the following items:

16) Eliminate controller tuning;

18) Switch air cooler to automatic control on the central computer and operate for at least 10 minutes;

18a) Bring off line 20 heliostats and operate until steady-state conditions exist;

18b) Bring on line 20 heliostats and operate until steady-state conditions exist;

20) Switch receiver outlet temperature to automatic control on the central computer and operate for at least 10 minutes;

21) Switch air cooler to automatic control on the central computer and operate for at least 10 minutes.

4.2.3 Test 3 PC-3 - Maximum Load, Tower Console Computer

Outlet receiver temperature will be slowly increased to a maximum of 566°C (1050°F) with solar input up to the maximum capability of the heliostats. System control will be provided by the tower control console.

The specific test conditions are:

1) Test will be performed during periods when shadowing of heliostat field by clouds is not probable;

2) Test will be terminated if shadowing of heliostat field by clouds is likely;

3) Experiment control will be handled by the tower control console.

The specific test objectives are to:

1) Operate receiver at maximum power level;

2) Demonstrate receiver outlet temperature control and air-cooler control via the tower control console at maximum power conditions;

3) Determine molten salt flow distribution through receiver tubes at maximum power conditions;

4) Calibrate segmented-orifice flowmeter at maximum flow conditions using the weigh tank;

5) Demonstrate that the receiver can be brought to its maximum power by slowly increasing the outlet temperature;

6) Perform final tuning of console controllers.

The test sequence is the same as Test 1 PC-1 (4.2.1) except for the following items:

11) Repeat items 9 and 10 until all functioning heliostats, except the first two rows, are operating. The last step in this sequence will probably bring on line less than the 20 heliostats called out in item 9. At the beginning of this step the air-cooler outlet temperature will be reduced to approximately 288°C (550°F) via control console manual control. After all heliostats are on line, the receiver outlet temperature will be manually adjusted to approximately 566°C (1050°F);

14) Delete this step;

15) Check temperature distribution on all receiver tubes;

17) Delete this step;

18) Switch air cooler to automatic control on the tower control console and operate for at least 10 minutes;

19) Return air cooler to manual control;

20) Switch receiver outlet temperature to automatic control on the tower control console with the set point at 566°C (1050°F) and operate for at least 10 minutes;

21) Switch air cooler to automatic control on the tower control console with the air-cooler outlet salt set point temperature at 288°C (550°F) and operate for 10 minutes;

22) Bring slowly off line all heliostats except the heliostats defined in item 2 (Test 1 PC-1, 4.2.1). During this operation the air cooler will be on automatic control while the receiver outlet temperature will be on manual control.

4.2.4 Test 4 PC-4 - Maximum Load, Central Computer Control

The outlet receiver temperature will be slowly increased to a maximum of 566°C (1050°F) with solar input up to the maximum capability of the heliostats. System control will be provided by the central computer.

The specific test conditions are:

1) Test will be performed during periods when shadowing of the heliostat field by clouds is not probable;

2) Test will be terminated if shadowing of the heliostat field by clouds is likely;

3) Experiment control will be handled by the central computer.

The specific test objectives are to:

1) Demonstrate receiver outlet temperature control at maximum power condition via the central computer;

2) Demonstrate air-cooler control at maximum power condition via the central computer.

The test sequence is the same as Test 3 PC-3 (4.2.3) except for the following items:

In steps 18, 20, and 21 (4.2.3) change automatic control by tower control console to automatic control by central computer.

4.2.5 Test 5 PC-5 - Maximum Load, Tower Console Control

Power will be slowly increased to maximum value with the receiver outlet temperature held constant at the nominal value of 566°C (1050°F). System control will be provided by the tower control console.

The specific test conditions are:

1) Test will be performed during periods when shadowing of heliostat field by clouds is not probable;

2) Test will be terminated if shadowing of heliostats by clouds is likely;

3) Experiment control will be handled by the tower control console.

The specific test objectives are to:

1) Demonstrate that the receiver can be brought to its maximum power with a slow increase in incident solar energy and with the receiver outlet temperature held constant at the nominal value of 566°C (1050°F);

2) Demonstrate that the receiver and air cooler can be automatically controlled via the tower control console during the transient from minimum to maximum power conditions.

The initial test sequence is the same as the system startup given by sequence items 1 through 8 from Test 1 PC-1 (4.2.1).

The following items from Test PC-1 will change:

9) Manually adjust molten salt flow rate and air-cooler outlet temperature until receiver outlet temperature is approximately 566°C (1050°F) and the air-cooler outlet salt temperature is approximately 288°C (550°F);

10) Switch air cooler to automatic control on the tower control console and switch receiver outlet temperature to automatic control on the tower control console;

11) Bring on line 20 additional heliostats. The heliostats used for this operation will be chosen so the basic flux distribution is uniform across the majority of the receiver's surface. Temperature will be held for at least 10 minutes before proceeding to next step;

12) Repeat item 11 until all functioning heliostats except the first two rows are operating. The last step in this sequence will probably bring on line less than the 20 heliostats called out in item 11;

13) Operate system at maximum power with the receiver outlet temperature at approximately 566°C (1050°F) for 1/2 hour;

14) Bring off line all heliostats except those defined in item 2 (Test 1 PC-1, 4.2.1). During this operation the air cooler will be on automatic control (tower control console) while the receiver outlet temperature will be on manual control;

15) Shut down system per items 23 through 27, Test 1 PE-1 4.2.1.

4.2.6 Test 6 PC-6 - Maximum Load, Central Computer Control

Power output will be slowly increased to maximum value with the receiver outlet temperature held constant at the nominal value of 566°C (1050°F). System control will be provided by the central computer.

The specific test condictions are:

1) Test will be performed during periods when shadowing of heliostat field by clouds is not probable;

2) Test will be terminated if shadowing of heliostats by clouds is likely;

3) Experiment control will be handled by the central computer.

The specific test objective are to:

1) Demonstrate that the receiver can be brought to its maximum power with a slow increase in incident solar energy and with the receiver outlet temperature held constant at the nominal value of 566°C (1050°F);

2) Demonstrate that the receiver and the air cooler can be controlled automatically via the central computer during the transient from minimum to maximum power conditions.

The test sequence will be identical to that of Test 5 PC-5 (4.2.5) except for the following item:

In step 10 (4.2.5) change automatic control by tower control console to automatic control by central computer.

4.2.7 Test 7 PC-7 - Partial Load with Emergency Shutdown

This test will be conducted the same as Test 1 PC-1 except that an emergency shutdown will be performed.

The specific test conditions are:

1) Tests will be performed during periods when shadowing of the heliostat field by clouds is not probable;

2) Test will be terminated if shadowing of heliostats by clouds is likely;

3) Experiment control will be handled by the tower control console.

The initial test sequence is the same as the system startup given by sequence items 1 through 11 from Test 1 PC-1 (4.2.1). The remainder of the test sequence is as follows:

12) Adjust molten salt flow rate until the receiver outlet temperature is approximately 482°C (900°F), maintaining the air-cooler outlet at approximately 343°C (650°F);

13) Simultaneously take all heliostats off line, stop the molten salt pump, and stop the air-cooler fans;

14) Ten seconds after initiation of commands associated with step 13, close air-cooler louvers, air-cooler top insulation, and cavity doors;

15) Monitor receiver temperatures and drain tubes;

16) Open flow control valve (FCV) and weigh tank butterfly valve (CV-1) and allow time for line from air-cooler outlet to sump to drain. Then close flow control valve;

17) Monitor air-cooler temperatures and receiver tube temperatures on the outlet pass of the receiver. When all air-cooler temperatures and all the receiver tube temperatures on the outlet pass of the receiver are below 371°C (700°F), drain the air cooler and the outlet pass of the receiver;

18 After the system is totally drained into sump, secure system.

4.2.8 Test 8 PC-8 - Recovery from Simulated Cloud Passage

The specific test conditions are:

1) Test will be performed during periods when shadowing of heliostat field by clouds is not probable;

2) Test will be terminated if shadowing of heliostats by clouds is likely;

3) Experiment control will be handled by the tower control console and the central computer.

The specific test objective is to demonstrate recovery from simulated cloud passage while operating at approximately one-half load with a receiver outlet temperature of approximately 482°C (900°F) and an air-cooler outlet salt temperature of approximately 343°C (650°F).

The initial test sequence is the same as the system startup given by sequence items 1 through 11 from Test 1 PC-1 (4.2.1). The remainder of the test sequence is as follows:

12) Adjust molten salt flow rate until the receiver outlet temperature is approximately 482°C (900°F), maintaining the air-cooler outlet at approximately 343°C (650°F);

13) Switch receiver outlet temperature and air-cooler outlet temperature to automatic control on the tower control console. The set points are the temperatures given in item 12);

14) Simulate a cloud passage from west to east traveling at approximately 2.2 m/s (5 mph). Starting with the west heliostat columns 13

and 14, bring off line approximately one-half the operating heliostats in this group. Four seconds after this operation, bring off line approximately one-half the operating heliostats in west columns 11 and 12. Continue this process until approximately one-half of the initially operating heliostats in the entire field are brought off line and operate in this condition for at least 10 minutes;

15) Starting with the west heliostat columns 13 and 14, bring on line the heliostats in this group that were brought off the line in item 14. Four seconds after this operation bring on line the heliostats in west columns 11 and 12 that were brought off line in item 14. Continue this process until the heliostat field is in the same condition as at the beginning of item 14 and operate in this condition for at least 10 minutes. Note that the first two rows of heliostats are not used;

16) Repeat items 13, 14 and 15 with the receiver and air cooler controlled automatically by the central computer;

17) Shut down system per items 22 through 27, Test 1 PC-1 (4.2.1).

4.3 CONVECTION TESTS - CAVITY

The convection tests are intended to provide an insight into the convection processes. These tests will be conducted with all heliostats off line to eliminate the uncertainties associated with the solar input to the receiver. For this class of test it is desirable to obtain an energy balance on the receiver during steady-state operation. To provide an unlimited period for steady-state operation, the heat input to the experiment via the trace-heating system would have to be equal to the total system losses. This is not the case for this experiment since a trace-heating system with a capability equal to the total system losses, particularly the receiver, would be prohibitively large. However, steady-state conditions can be provided for a sufficient time to conduct meaningful convective loss tests utilizing the fluid transit lag time through the system. This is accomplished by slowing the molten salt flow rate to a low value at the point in the test when the entire system is at approximately 371°C (700°F). Also at this time the cavity doors are opened allowing convection to the ambient. At this beginning point there will be a slug of 371°C (700°F) molten salt in the air cooler, sump, and interconnecting piping from receiver outlet to receiver inlet. For the time it takes this slug to flow past the receiver inlet, the temperature at the receiver inlet will remain essentially constant at 371°C (700°F). This time can also be increased by utilizing the weigh tank to hold up the flow through the system. It turns out that the receiver inlet temperature can be held constant for approximately 13 minutes. Since this is enough time for

the receiver outlet temperature to come to steady-state conditions, the convective losses can be readily obtained.

The receiver configuration and overall test conditions are:

1) Cavity configuration;

2) The real-time aperture flux (RTAF) system attached to the cavity.

The overall objective is to determine the convective losses from the receiver in the cavity configuration.

4.3.1 Test 9CC - Convection Loss at 371°C (700°F)

The initial test sequence is the same as the system startup given by sequence items 1 through 6 from Test 1 PC-1 (4.2.1). The remainder of the sequence is as follows:

7) Bring off line the startup heliostats and close the cavity doors;

8) Use the trace-heating system to increase the average molten salt temperature throughout the system to approximately 371°C (700°F);

9) Reduce the molten salt flow rate to yield a Reynolds number in the receiver tubes of approximately 4000 (slightly turbulent);

10) Perform a molten salt flow calibration test using the weigh tank;

11) Open the cavity doors;

12) Close the butterfly valve on the weigh tank consistent with the time it takes the fluid to travel from the receiver outlet to the weigh tank inlet (approximately 6 minutes after cavity doors are opened);

13) Measure receiver temperatures until receiver inlet temperature has changed by more than ±2.7°C (±5°F) from its initial value;

14) Close cavity doors;

15) Drain and secure system.

Note that even though the convection test is called out here as a separate test, it will be performed at the end of each test day, starting with 3 PC-3, if conditions are appropriate. This approach is taken so as many wind conditions as possible will be included in the convection data base.

4.4 PERFORMANCE TESTS - CAVITY

The overall test conditions and receiver configuration include:

1) Cavity configuration;

2) Real-time aperture flux (RTAF) system attached to the cavity;

3) The first two rows of heliostats not used;

4) Single-point heliostat aim strategy will be used with the maximum flux limited to 69.3 W/cm^2 (220,000 $Btu/h\text{-}ft^2$);

5) Experiment control will be handled by central computer.

The test objectives are to:

1) Determine the efficiency of the receiver in the cavity configuration at several load conditions;

2) Demonstrate performance of receiver at maximum load;

3) Demonstrate ability of receiver to recover from actual or simulated cloud passages.

The specific test objective is to develop the data so a curve of receiver output versus input can be plotted.

4.4.1 Test 10 PFC-1 - Efficiency Tests with Receiver in Cavity Configuration

The test sequence is:

1) Heat all molten salt lines, air cooler, receiver headers, and sump to approximately 288°C (550°F). The salt will have been previously melted in the sump and the sump temperature maintained at approximately 288°C (550°F) continuously. During system heat-up, the air-cooler louvers and top insulation will be in their closed position;

2) Heat uninsulated receiver tubes to approximately 288°C (550°F) using eight to 10 heliostats. The particular heliostats and their aim strategies for this operation will be chosen so the flux distribution on the receiver tubes is as uniform as possible. Also during this step the air heat rejection system will supply air at 316°C (600°F) to the interior of the receiver tubes. This air at a flow rate of 0.23 kg/s (0.5 lb/s) will tend to smooth the receiver tube temperature;

3) Fill system with molten salt and start pump;

4) Monitor trace-heating system and shut off heaters as required;

5) Start molten salt flow through system. Set flow at rate consistent with receiver's maximum power. Monitor trace-heating system and shut off heaters as required;

6) Bring on line 20 additional heliostats. The heliostats used for this operation will be chosen so the basic flux distribution is uniform across the majority of the receiver's surface;

7) Open the air-cooler louvers and top insulation and start fans with zero pitch on fan blades. Adjust pitch on fan blades until air-cooler outlet salt temperature is approximately 288°C (550°F) and steady;

8) Manually adjust molten salt flow rate and air-cooler outlet temperature until receiver outlet temperature is approximately 566°C (1050°F) and the air-cooler outlet salt temperature is approximately 288°C (550°F);

9) Switch air cooler to automatic control on the central computer and switch receiver outlet temperature to automatic control on the central computer;

10) Bring on line a set of heliostats so the receiver power levels will be between 25 and 35% of full load. At this setting operate system until steady-state is achieved. At or near steady-state record all receiver temperatures, the receiver radiation emission, salt flow rate (using the segmented orifice), and the heliostat input power from the RTAF. Calculate and display the receiver efficiency;

11) Bring on line a set of heliostats so the receiver power level will be between 35 and 45% of full load and operate this test segment as described in item 10. Repeat this process by moving to power levels between 45 and 55%, 55 and 65%, etc until full power is achieved. Operate this test (it will undoubtedly require several days) until efficiency data are obtained for at least two data points in each efficiency range;

12) Bring off the line all heliostats except those defined in item 2 of this sequence. During this operation the air cooler will be on automatic control (central computer) while the receiver outlet temperature will be on manual control;

13) Shut down system per items 23 through 27, Test 1 PC-1 (4.2.1).

4.4.2 Test 11 PFC-2 - Maximum Power Tests with Receiver in Cavity Configuration

The specific test objective is to demonstrate system performance at maximum load for a minimum of 20 hours.

The test sequence is the same as Test 10 PFC-1 (4.4.1) except to increase the receiver to maximum power as rapidly as practical and continue tests until a minimum of 20 hours have been accumulated.

4.4.3 Test 12 PFC-3 - Demonstrate Recovery from Simulated Cloud Passage, Cavity Configuration

The specific objectives are to:

1) Demonstrate recovery from simulated cloud passage while operating at 75% of maximum power with the receiver outlet temperature set at 537.8°C (1000°F) and the air-cooler outlet temperature set at 315.5°C (600°F);

2) Cloud speed is approximately 4.4 m/s (10 mph).

The test sequence is the same as Test 8 PC-8 (4.2.8) except the cloud speed is 4.4 m/s (10 mph) instead of 2.2 m/s (5 mph), the load is 75% of maximum instead of 50%, the receiver outlet temperature is changed to 537.8°C (1000°F), and the air-cooler outlet temperature is changed to 315.5°C (600°F). Also for this test cloud travel from east to west, west to east, north to south, and south to north will be simulated. Note that it is likely that cloud conditions similar to the those defined here will have occurred during the test periods of 10 PFC-1 or 11 PFC-2. If this is the case, system performance data will have been obtained for cloud conditions similar to those of this test and this test need not be performed.

4.5 PERFORMANCE TESTS - EXPOSED

The overall test conditions and receiver configuration include:

1) Exposed configuration with the center 3.35x3.35-m (11x11-ft) portion of the receiver illuminated;

2) Real-time aperture flux (RTAF) system attached directly in front of and in the center of the receiver. The receiver tubes outside the aperture of the RTAF will be insulated on the heliostat side of the tubes;

3) The first two rows of heliostats will not be used;

4) Single-point heliostat aim strategy will be used with the maximum flux limited to 69.3 W/cm^2 (220,000 Btu/h-ft^2);

5) Experiment control will be handled by central computer.

The test objectives are to:

1) Determine the efficiency of the receiver in the exposed configuration at several load conditions;

2) Demonstrate ability of receiver to recover from actual or simulated cloud passages.

The specific test objective is to develop the data so a curve of receiver output versus input can be plotted.

4.5.1 Test 13 PFE-1 - Efficiency Tests with Receiver in Exposed Configuration

The test sequence is:

1) Heat all molten salt lines, air cooler, receiver headers, and sump to approximately 288°C (550°F). The salt will have been previously melted in the sump and the sump temperature maintained at approximately 288°C (550°F) continuously. During system heat-up, the air-cooler louvers and top insulation will be in their closed position;

2) Heat uninsulated receiver tubes to approximately 288°C (550°F) using eight to 10 heliostats. The particular heliostats and their aim strategies for this operation will be chosen so the flux distribution on the receiver tubes is as uniform as possible;

3) Heat insulated receiver tubes using the air heater and the air supply from the air heat rejection system. Continue this process until all receiver tubes are approximately 288°C (550°F);

4) Fill system with molten salt, monitor trace-heating system, and shut off heaters as required;

5) Start molten salt flow through system. Set flow at rate consistent with receiver's maximum power. Monitor trace-heating system and shut off heaters as required;

6) Bring on line 20 additional heliostats. The heliostats used for this operation will be chosen so the basic flux distribution is uniform across the majority of the receiver's surface;

7) Open the air-cooler louvers and top insulation and start fans with zero pitch on fan blades. Adjust pitch on fan blades until air-cooler outlet salt temperature is approximately 288°C (550°F) and steady;

8) Manually adjust molten salt flow rate and air-cooler outlet temperature until receiver outlet temperature is approximately 566°C (1050°F) and the air-cooler outlet salt temperature is approximately 288°C (550°F);

9) Switch air cooler to automatic control on the central computer and switch receiver outlet temperature to automatic control on the central computer;

10) Bring on line a set of heliostats so the receiver power levels will be between 25 and 35% of full load relative to this partially exposed configuration. At this setting operate system until steady-state conditions are achieved. At or near steady-state, record all receiver temperatures, the receiver radiation emission, salt flow rate (using the segmented orifice), and the heliostat input power from the RTAF. Calculate and display the receiver efficiency;

11) Bring on line a set of heliostats so the receiver power level will be between 45 and 55% of full load and operate this test segment as described in item 10. Repeat this process by moving to power levels between 55 and 65%, 65 and 75%, etc until full power is achieved. Operate this test (it will undoubtedly require several days) until efficiency data are obtained for at least two data points in each power range;

12) Bring off the line all heliostats except those defined in item 2 of this sequence. During this operation the air cooler will be on automatic control (central computer) while the receiver outlet temperature will be on manual control;

13) Shut down system per items 23 through 27, Test 1 PC-1 (4.2.1).

4.5.2 Test 12 PFE-2 - Recovery from Simulated Cloud Passage, Exposed Configuration

The specific objectives are to:

1) Demonstrate recovery from simulated cloud passage while operating at 75% of maximum power with the receiver outlet temperature set at 537.8°C (1000°F) and the air-cooler outlet temperature set at 315.5°C (600°F);

2) Cloud speed is approximately 4.4 m/s (10 mph).

The test sequence is the same as Test 12 PFC-3 (4.4.3) except the receiver configuration is exposed instead of cavity. Note that it is likely that cloud conditions similar to those defined here will have occurred during the periods of Test 13 PFE-1. If this is the case, system performance will have been obtained for cloud conditions similar to those of this test and this test need not be performed.

4.6 CONVECTION TESTS - EXPOSED

The exposed convection test receiver configuration and overall test conditions include:

1) Exposed configuration with entire receiver surface area open to the environment, 3.35x5.49 m (11x18 ft);

2) The real-time aperture flux (RTAF) system is not attached to the receiver.

The overall objective is to determine the convective losses from the receiver in the exposed configuration.

4.6.1 Test 15 CE - Convection Loss at 371°C (700°F)

The initial test sequence is the same as the system startup given by sequence items 1 through 6 from Test 1 PC-1 (4.2.1). The remainder of the sequence is as follows:

7) Bring on line a set of heliostats that will cause the average molten salt temperature throughout the system to increase to approximately 371°C (700°F). The trace-heating system, along with the heliostats, will be used to achieve this condition;

8) Reduce the molten salt flow rate to yield a Reynolds number in the receiver of approximately 4000 (slightly turbulent);

9) Perform a molten salt flow calibration test using the weigh tank;

10) Bring all heliostats off the line;

11) Close butterfly valve on the weigh tank consistent with the time it takes the fluid to travel from the receiver outlet to the weigh tank inlet (approximately 6 minutes after heliostats are removed in item 10);

12) Measure receiver temperature until receiver inlet temperature has changed by more than ±2.7°C (±5°F) from its initial value;

13) Drain and secure system.

Note that convection tests will be performed either separately or in series to provide at least 10 data points at various wind conditions.

4.7 SPECIAL TEST - CAVITY

The overall test conditions and receiver configuration are:

1) Cavity configuration with the entire receiver surface area illuminated, 3.35x5.49 m (11x18 ft);

2) The real-time aperture flux (RTAF) system attached to the receiver;

3) The first two rows of heliostats not used.

The test objectives are to:

1) Demonstrate performance of receiver under extreme conditions;

2) Subject receiver to rapid cyclic conditions;

3) Obtain as much maximum power receiver operation time as the test program schedule will permit.

4.7.1 Test 16 SE-1 - Cycle Tests

The specific test conditions are:

1) Receiver operating at maximum power;

2) Experiment control via central computer;

The specific objective is to demonstrate receiver capability to undergo 1000 cycles.

The test sequence is to bring all heliostats off line at full power and after 1 minute bring all heliostats on line. Keep heliostats on line for 1 minute and repeat cycle. Continue this process until 1000 cycles have been accumulated over the entire test program.

4.7.2 Test 17 SE-2 - Endurance Tests

The specific test conditions are:

1) Receiver operating at maximum power and design temperatures;

2) Experiment control via central computer.

The specific test objective is to demonstrate the receiver's capability to operate at maximum power for 100 hours at or near the design point.

The test sequence is the same as Test 13 PFE-1 (4.5.1).

4.7.3 Test 18 SE-3 - Extreme Cloud Conditions

The specific test conditions are:

1) Receiver operating at maximum power and design temperatures;

2) Experiment control via central computer.

The specific test objective is to demonstrate that the receiver can recover from extreme cloud conditions while operating at maximum power and at design temperature levels.

This test will be conducted in a similar manner as Test 14 PFE-2 except that the system will be operated at maximum power, the receiver outlet temperature will be set at 566°C (1050°F), and the air-cooler outlet temperature will be set at 288°C (550°F). Also the full sets of operating heliostats will be brought off the line in each region as the "cloud" passes over the heliostat field. The time that the "cloud" will cover the entire heliostat field will be 2 minutes.

4.7.4 Test 19 SE-4 - Lateral Support Shadowing

The specific test conditions are:

1) Receiver operating at maximum power;

2) Lateral support shadows provided by refractory material.

The specific objective is to demonstrate the effect of shadowing that would occur in commercial design on the receiver tubes.

The sequence is similar to Test 13 PFE-1 (4.5.1). Three tests will be performed with shadows at different locations for each test.

4.7.5 Test 27 MC-6 - High Localized Fluxes

The specific test condition is to aim heliostats to yield a flux of approximately 94.5 W/cm^2 (300,000 Btu/h-ft^2) in the center of the receiver. The test will proceed until steady-state conditions are achieved.

The specific test objective is to demonstrate the effect of high fluxes on receiver tubes.

The test sequence is similar to Test 13 PFE-1 (4.5.1).

5.0 TEST PROGRAM SCHEDULE

Table 5-1 lists the tests that will be conducted during this program. The table includes an estimate of the days required to conduct each of the tests assuming ideal-weather (solar) conditions and no effect on test time due to problems with the test system. As the program proceeds, experience will enable the tests to be conducted in relatively shorter periods of time. It should be noted that the checkout tests do not require operation of the heliostats and these tests will be performed in Denver or at ground level at CRTF. These checkout tests, which are scheduled for Albuquerque, will also be conducted in series with the system buildup operations. The current plan is to perform the system buildup and the checkout tests over a period of approximately 1 1/2 months.

Figure 5-1 is an overall schedule for the test operations. The rationale used to obtain the span times for the tests is as follows. Starting with the ideal test times from Table 5-1, the individual times for each of the major test categories (preliminary tests, convection tests, etc) are summed. These span times are then adjusted on a monthly basis to account for Albuquerque weather conditions. This adjustment is based on Table 2 from the Central Receiver Test Facility Experiment Manual entitled "Typical Albuquerque Sunshine (Compiled from 38-Year Record)." For the preliminary checkout procedures, only clear days will be used for testing so the cloudiness factor applied to the ideal test times is (days in a month/clear days in a month). For the remainder of the tests the cloudiness factor is [days in a month/(clear days in a month + 1/2 partly cloudy days in a month)].

In other words, for all solar tests except the preliminary checkout procedures, it is assumed that partly cloudy days will provide a half day of testing. The final adjustment of test spans is a learning curve factor. This factor accounts for the experience of the test crew and provides a means of factoring this experience into the test span times. The values assumed for this factor are tabulated.

Test	Learning Curve Factors
Preliminary Checkout Procedures - Cavity	2.0
Convection Tests - Cavity	2.0
Performance Tests - Cavity	1.5
Performance Tests - Exposed	1.5
Convection Tests - Exposed	1.5
Special Tests - Cavity	1.2

An example of the calculation to provide the span time for the exposed performance tests is:
Ideal test time = 5.0 days
Cloudiness factor (Aug) = [31/(14 + 0.5 x 12)] = 1.55
Learning curve factor = 1.5

Adjusted span time = 5.0 x 1.55 x 1.5 = 11.63 = 12 days
(all times are rounded to nearest whole number).

Table 5-1 Ideal Test Spans

				Days
4.1 Checkout Tests				
4.1.1		CO-1	Airflow Distribution for Air Cooler (Denver)	1.0
4.1.2		CO-2	Hydrostatic and Leak Checks (Denver)	2.0
4.1.3		CO-3	Sump and Air-Cooler Heaters (Denver)	2.0
4.1.4		CO-4	Thermocouples (Albuquerque)	2.0
4.1.5		CO-5	System Trace Heaters (Albuquerque)	2.0
4.1.6		CO-6	Functional Valve Operation (Albuquerque)	0.5
4.1.7		CO-7	Electrical Control System (Albuquerque)	1.0
4.1.8		CO-8	Functional Test with Water (Albuquerque)	2.0
4.1.9		CO-9	Functional Test with Salt (Albuquerque)	1.0
4.2 Preliminary Checkout Procedures - Cavity				
4.2.1	1	PC-1	Partial Load - Tower Console Control	1.0
4.2.2	2	PC-2	Partial Load - Central Computer Control	1.0
4.2.3	3	PC-3	Maximum Load - Tower Console Control	1.0
4.2.4	4	PC-4	Maximum Load - Central Computer Control	1.0
4.2.5	5	PC-5	Maximum Load - Tower Console Control	1.0
4.2.6	6	PC-6	Maximum Load - Central Computer Control	1.0
4.2.7	7	PC-7	Partial Load with Emergency Shutdown	1.0
4.2.8	8	PC-8	Recovery from Simulated Cloud Passage	1.0
4.3 Convection Tests - Cavity				
4.3.1		9CC	Convection Loss at 700°F	3.0
4.4 Performance Tests - Cavity				
4.4.1	10	PFC-1	Efficiency Tests at 35 to 100% of Maximum Load	3.0
4.4.2	11	PFC-2	Maximum Load for 20 Hours	5.0
4.4.3	12	PFC-3	Recovery from Simulated Cloud Passage	2.0
4.5 Performance Tests - Exposed				
4.5.1	13	PFE-1	Efficiency Tests at 45 to 100% of Maximum Load	3.0
4.5.2	14	PFE-2	Recovery from Simulated Cloud Passage	2.0
4.6 Convection Tests - Exposed				
4.6.1	15	CE	Convection Loss at 700°F	3.0
4.7 Special Tests - Cavity				
4.7.1	16	SE-1	Cycle Tests	5.0
4.7.2	17	SE-2	Endurance Test	13.0
4.7.3	18	SE-3	Extreme Cloud Conditions	0.5
4.7.4	19	SE-4	Lateral Support Shadowing	3.0
4.7.5	20	SE-5	High Localized Fluxes	0.5

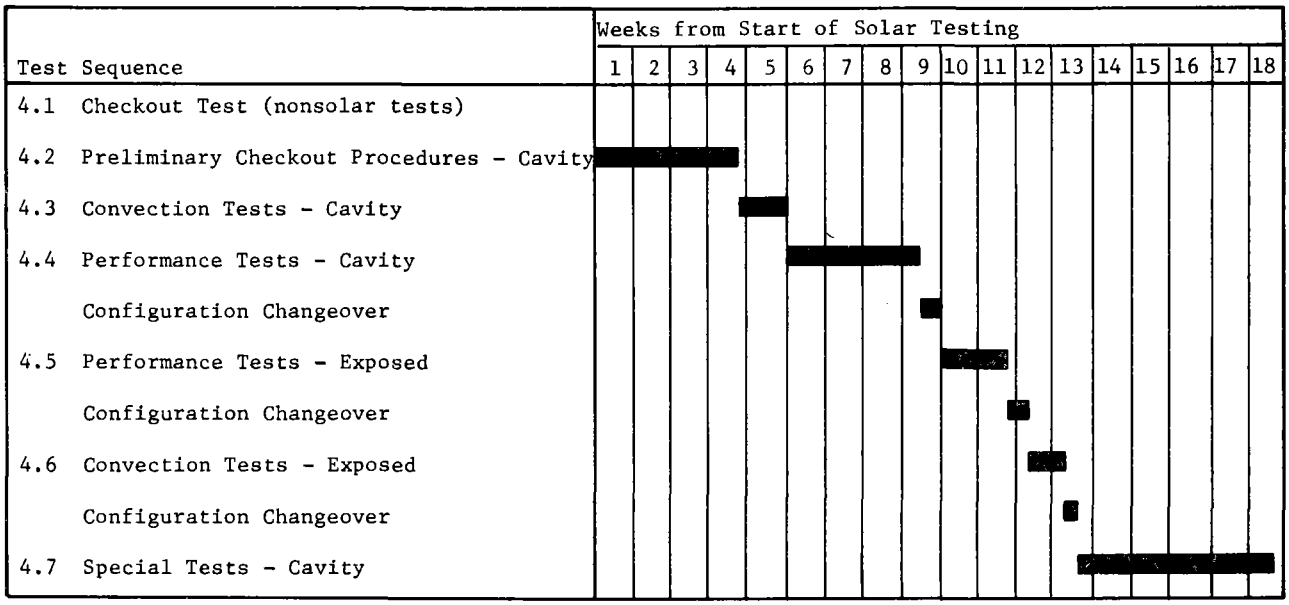

Figure 5-1 Test Schedule