PDOC - 095

SAN/0499-02
MDC G9705

Sandia National Laboratories
10MWe Central Receiver
Pilot Plant Field Office
P. O. Box 366
Daggett, CA 92327
(714) 254-2971

STMPO # 233
EXTRA Bk.2.

10 MWe Solar Thermal Central Receiver Pilot Plant

SOLAR FACILITIES DESIGN INTEGRATION

PLANT MAINTENANCE/TRAINING MANUAL (RADL ITEM 2-37)
SECTION 3 — ELECTRICAL APPARATUS, BOOK 2 OF 2

Revised September 1982
July 1981

WORK PERFORMED UNDER
CONTRACT DE-AC03-79SF10499

MCDONNELL DOUGLAS ASTRONAUTICS COMPANY
5301 BOLSA AVENUE
HUNTINGTON BEACH, CA 92647

U.S. Department of Energy

MCDONNELL DOUGLAS CORPORATION | Rockwell International Rocketdyne Division | Stearns-Roger | Solar Energy

SAN/0499-82
MDC G9705

10 MWe Solar Thermal
Central Receiver Pilot Plant
Solar Facilities Design Integration

PLANT MAINTENANCE/TRAINING MANUAL (RADL ITEM 2-37)
SECTION 3 — ELECTRICAL APPARATUS, BOOK 2 OF 2

July 1981
Revised September 1982

MCDONNELL DOUGLAS ASTRONAUTICS COMPANY
5301 BOLSA AVENUE
HUNTINGTON BEACH, CA 92647

PREPARED FOR THE
U.S. DEPARTMENT OF ENERGY
SOLAR ENERGY
UNDER CONTRACT DE-AC03-79SF10499

UPDATE FOR

PLANT MAINTENANCE/TRAINING MANUAL

(RADL ITEM 2-37)

SECTION 3 - ELECTRICAL APPARATUS

INSTRUCTIONS:

1. This update is issued to incorporate corrections and additions to the preface, table of contents, and to incorporate additional information in paragraphs 3.1 Transformers, 3.2 Motor Control Centers, 3.3 Substations, 3.4 Junction Boxes, 3.5 Switchgear, and 3.6 Power Panels. This section has been printed in two parts for this update. Discard the original July 1981 issue as the content has been included in this printing.

PREFACE

This document is provided by the McDonnell Douglas Astronautics Company (MDAC) in accordance with Department of Energy Contract Number DE-AC03-79SF10499, Reports and Deliverables List Item 2-37. The material presented here is intended for training and maintenance usage by Southern California Edison Operations Personnel.

Specific notes on the organization and content of the document are as follows:

1. This document is organized in major sections that reflect the top level breakdown of the Master Equipment List as defined in RADL Item 2-19. This is in contrast to the subsystem approach used in designing the plant, however, is consistent with the Southern California Edison operating plant equipment lists.

Section 1 - Rotating Apparatus
Section 2 - Stationary Apparatus
Section 3 - Electrical Apparatus
Section 4 - Valves
Section 5 - Instrumentation
Section 6 - Control and Data Systems
Section 7 - Collector System
Section 8 - Special Heliostat Instrumentation and Meteorological Measurements Equipment
Section 9 - Heating Ventilating and Air Conditioning
Section 10 - Facilities

2. Assignments to categories are made on the basis of the lowest level tag numbers. For example, maintenance information for the thermal storage extraction pump skid assembly (SA-309) is not listed in the stationary apparatus section, but broken down to the generic categories as defined by the tag number; i.e., pumps (Section 1.2), air operated stop valves (Section 4.2), pressure transmitter (Section 5.2), etc.

3. The Process Instrumentation Section (Section 5.0) is organized on the basis of sensor type as defined by the first letter of the designating tag number. It contains sensor-related information only. Signal conditioning equipment is treated in Section 6.0.

4. The information on the Collector System, which was provided by the Martin Marietta Corp. (MMC) and the major items of the Electrical Power Generation System equipment, provided by Southern California Edison is not provided herein. However, the various sections were structured for their inclusion where applicable.

Technical questions concerning this RADL Item should be directed to Mr. R. G. Riedesel at (714) 896-3357 or Mr. R. J. Perkins at (714) 896-3073.

TABLE OF CONTENTS

1.0 Rotating Apparatus

- 1.1 Turbine-Generator
- 1.2 Pumps
- 1.3 Fans
- 1.4 Air Compressor
- 1.5 Blowers
- 1.6 Centrifuges

2.0 Stationary Apparatus

- 2.1 Heat Exchangers
- 2.2 Receiver Panels
- 2.3 Tanks, Vessels, and Receivers (Air or GN_2)
- 2.4 Deaerator
- 2.5 Condenser (turbine-generator)
- 2.6 Desuperheaters
- 2.7 Filters and Strainers
- 2.8 Demineralizers
- 2.9 Heaters
- 2.10 Dryers
- 2.11 Separators
- 2.12 Ullage Gas Supply and Conditioning
- 2.13 Auxiliary Boilers
- 2.14 Sewage Treatment Plant
- 2.15 Expansion Joints
- 2.16 Orifice Plates

3.0 Electrical Apparatus

- 3.1 Transformers
- 3.2 Motor Control Centers
- 3.3 Substations
- 3.4 Junction Boxes
- 3.5 Switchgear
- 3.6 Power Panels
- 3.7 Cables
- 3.8 Lighting

4.0 Valves

- 4.1 Modulating Control and Related Solenoid Valves
- 4.2 Air Operated Stop and Related Solenoid Valves
- 4.3 Motor Operated Valves (MOV)
- 4.4 Other Solenoid Valves
- 4.5 Safety-Relief Valves
- 4.6 Check and Stop Check Valves
- 4.7 Manual Valves
- 4.8 Pressure Regulator
- 4.9 Rupture Discs
- 4.10 Traps

5.0 Process Instrumentation
  5.1 (T) Temperature
  5.2 (P) Pressure and Differential Pressure
  5.3 (F) Flowrate
  5.4 (L) Level
  5.5 (W) Weight/Force
  5.6 (A) Analysis
  5.7 (I) Current
  5.8 (E) Voltage
  5.9 (J) Power
  5.10 (Y) Heat
  5.11 (S) Speed/Frequency
  5.12 (C) Conductivity
  5.13 (Z) Position
  5.14 (O) Deflection
  5.15 (X) Vibration

6.0 Control and Data Systems
  6.1 Subsystem Distributed Process Control (SDPC)
  6.2 Control Console (CON)
  6.3 Interlock Logic System (ILS)
  6.4 Signal Conditioning Unit (SCU)
  6.5 Red-Line Unit (RLU)
  6.6 Data Acquisition System (DAS)
  6.7 Data Acquisition Remote Multiplexer System (DARMS)
  6.8 Operational Control System (OCS)
  6.9 Beam Characterization System (BCS)
  6.10 Special Heliostat Instrumentation and Meteorological Measurement System (SHIMMS)
  6.11 Solid State Relays
  6.12 T.C. Reference Junctions
  6.13 MCS Timing System

7.0 Collector System
  7.1 Heliostat Assembly
  7.2 Heliostat Drive System
  7.3 Heliostat Pedestal Assembly
  7.4 Heliostat Controller (HC)
  7.5 Heliostat Field Controller (HFC)
  7.6 Computer Control System

8.0 Special Heliostat Instrumentation and Meteorological Measurements Systems Equipment
  8.1 Meteorological Equipment
  8.2 Special Heliostat Instrumentation

9.0 Heating, Ventilating, and Air Conditioning
  9.1 Material Data
  9.2 Thermal Storage Control Buildings Cooling
  9.3 Thermal Storage Electrical Equipment Building Cooling
  9.4 Thermal Storage Control Building Heating

10.0 Facilities
  10.1 Fire Protection
  10.2 Elevator
  10.3 Buildings
  10.4 Electronics Enclosures
  10.5 Receiver Tower
  10.6 Pipe Rack

Equipment Number	Description	Maintenance Section	P&ID Dwg. Number
SCE 0001	Motor Control Center - A	3.2.1	
PSS 0002	480v Motor Control Center - B	3.2.2	
SCE 0002	Motor Control Center - L	3.2.3	
PSS 0003	480v Motor Control Center - C	3.2.2	
--	TSS Main Oil Pump Controller	3.2.4	

3.2 MOTOR CONTROL CENTERS

3.2.2 480V Motor Control Centers B and C

3.2.2.1 Identification

Tag Number	Description
PSS 0002	480V motor control center B
PSS 0003	480V motor control center C

3.2.2.2 Description

Manufacturer:
Abbott Power Corporation
7650 Stage Road
Buean Park, CA 90620

Part No: See Abbott Power Corp. manual, Table of contents for equipment list

3.2.2.3 Vendor

Abbott Power Corp.

3.2.2.4 Procurement Specification

Stearns-Roger Spec F235.1 (DOE Spec 40E700-19S)

3.2.2.5 Operation/Maintenance

See Abbott Power Corp. manual included in maintenance section 3.1.1

BILL OF MATERIAL

CERTIFIED
ABBOTT POWER CORPORATION
BY M. Adams
DATE 3-10-81

CUSTOMER STEARNS-ROGER, INC.
P.O. BOX 5888
DENVER, CO 80217

USER SOLAR PILOT PLANT

CUSTOMER ORDER # 4004621700

CUSTOMER SPECIFICATION # C-21700SRF235-1 SECTION I, II & III

JOB DESCRIPTION

480 VOLT LOAD CENTER INCLUDING:

(1) 5KV, 600A LOAD BREAK SWITCH

(1) 1000 KVA POWER TRANSFORMER

(1) 480V INDOOR SWITCHGEAR

(1) 480V 1600 AMP NON-SEGREGATED BUS DUCT

(2) 480V MOTOR CONTROL CENTER

C. E. FILE

FINAL APR 1 1981

Stearns-Roger
RECEIVED C21700 MAR 23 '81

SR No E235.1 File No 01

DESIGN ELEC.:	DESIGN MECH.:	DRAWN BY:	DATE	CHK. BY:	DATE	APP'D. BY:
AC	AC	AC/MA	9/12/80			

Abbott Power Corporation
7650 STAGE ROAD • BUENA PARK • CALIFORNIA 90620
A MEMBER OF NEMA

PROJ. NO.: 5049
DWG. NO.: 5049-1X
PAGE 1 OF 5

VU-COLOR REORDER NO. 1207
VU-VEL V-16

NOTES

I **BUS**

PLATING ALUMINUM WITH TIN PLATED JOINTS

RATING AS SHOWN IN SINGLE LINE DIAGRAM

SIZE AS SHOWN IN SECTION VIEW DRAWING

BRACING 22KA

△E BELLEVILLE TYPE SPRING WASHERS SHALL BE USED ON BUS JOINTS WITH STEEL BOLTS.

△B II **PAINT** ANSI #61 FOR SWITCHGEAR, ANSI #70 FOR LOAD INTERRUPTER SWITCH

DRAWINGS APPROVAL 4 REPRODUCIBLES, 8 PRINTS

FINAL 4 REPRODUCIBLES, 8 PRINTS

III. **MECHANICAL NOTES**

△D 1. DESIGN SHALL COMPLY WITH UBC SEISMIC ZONE #3. EQUIPMENT DESIGNED TO WITHSTAND LATERAL SEISMIC FORCES GENERATED BY A GROUND ACCELERATION OF 0.25G. CALIFORNIA CODE APPLIES.

2. EQUIPMENT TO HAVE A SERVICE LIFE OF (30) YEARS.

3. DOORS AND PANELS SHALL BE FLANGED AND ALL CORNERS SHALL BE WELDED AND GROUND OR FORMED ROUND. DOORS AND PANELS SHALL BE HELD IN PLACE BY SLOTTED HEAD SCREWS WITH RETAINERS WHICH SHALL FIT INTO ADJUSTABLE NUTS ON THE FRAME.

4. PROVIDE SUITABLE MEANS FOR LIFTING THE SWITCHGEAR.

5. SHIPPING SECTIONS TO BE IN WATER TIGHT AND DUST PROOF CONTAINERS AS FAR AS COMMERCIAL PRACTICE ALLOWS.

C. E. FILE

FINAL APR 1 1981

Stearns-Roger

E-21700 MAR 23 '81

SR No E235.1 File No 02

IV **WIRING**

1. REFER TO SPECIFICATION JF16.01.01 PAGE 5 TO 7 FOR WIRING DIAGRAM INSTRUCTIONS.

2. EACH TERMINAL BLOCK SHALL HAVE AT LEAST 20% SPARE TERMINALS

DESIGN ELEC.:	DESIGN MECH.:	DRAWN BY:	DATE	CHK. BY:	DATE	APP'D. BY:
AC		AC/MA	9/12/80			

Abbott Power Corporation
7650 STAGE ROAD · BUENA PARK · CALIFORNIA 90620
A MEMBER OF NEMA

PROJ. NO.: 5049

DWG. NO.: 5049-1x

PAGE 2 OF 5

NOTES (CONTINUED)

IV WIRING (CONTINUED)

3. SHORTING TYPE TERMINAL BLOCKS REQUIRED FOR CURRENT TRANSFORMER SECONDARIES.

4. USE RING TONGUE ON WIRING.

c 5. ALL TERMINALS TO HAVE COVERS.

TEST

ALL BUSES AND POWER CIRCUIT BREAKERS SHALL UNDERGO A ONE-MINUTE 60HZ DIELECTRIC WITHSTAND TEST. THE TEST VOLTAGE SHALL BE 2200 VOLTS.

C. E. FILE

FINAL APR 1 19[illegible]

Stearns-Roger
[illegible] C21700 MAR 23 '81
SR No F235.1 File No 03

DESIGN ELEC.:	DESIGN MECH.:	DRAWN BY:	DATE	CHK. BY:	DATE	APP'D. BY:
AC		AC/MA	9/12/80			

Abbott Power Corporation
7650 STAGE ROAD · BUENA PARK · CALIFORNIA 90620
A MEMBER OF NEMA

PROJ. NO.: 5049
DWG. NO.: 5049-1X
PAGE 3 OF 5

REVISIONS

REV.	B/M	PAGE	DESCRIPTION	BY	DATE
A	5049-1	3	REVISED VENDOR ITEM 8-1	AC	10/8/80
B	5049-1	6	ADDED ITEM 72-1 and 73-1	ac	
B	5049-1X	2	REVISED NOTE FOR PAINT	AC	11/5/80
	5049-1	1, 2	REVISED DESCRIPTION ITEMS 1-1, 1-2, & 1-3 PER CUSTOMER		
	5049-1	5	ADD ITEM 56-2	AC	11/5/80
C	5049-1	5, 6	REVISED DESCRIPTION, ITEM 56-1, 56-2 & 57-1		11/29/80
C	5049-1X	3	ADD NOTE #5		
D	5049-1X	2	REVISED MECHANICAL NOTE #1, ADDED CALIFORNIA CODE APPLIES.	AC	12/3/80]
E	5049-1X	2	REVISED NOTE I TO ADD STEEL BOLTS TO BELLEVILLE SPRING WASHERS.		12/8/80

C. E. FILE

FINAL APR 1 1981

Stearns-Roger

[illegible] 021700 MAR 23 '81

SR No F2351 File No 04

Abbott Power Corporation
7650 STAGE ROAD • BUENA PARK • CALIFORNIA 90620
A MEMBER OF NEMA

PROJ. NO.: 5049-

DRAWN BY: AC/MA

DWG. NO. 5049-1X

PAGE 4 of 5

VU-COLOR REORDER NO. 1209
VU-VEL V-16

DRAWING LIST

1-5049-1-1	ELEVATION AND BASE PLAN SWGR.
1-5049-1-2	SECTION VIEW SWGR.
1-5049-1-3	SECTION VIEWS 5KV SWGR.
1-5049-2-1	ELEVATION AND BASE PLAN MCC
2-5049-1-1	SINGLE LINE DIAGRAM SWGR.
3-5049-1-1	THREE LINE DIAGRAM SWGR.
3-5049-2-1	THREE LINE DIAGRAM MCC-B
3-5049-2-2	THREE LINE DIAGRAM MCC-C
5-5049-1-1	WIRING DIAGRAM UNIT #1
5-5049-1-2	WIRING DIAGRAM UNIT 2
5-5049-1-3	WIRING DIAGRAM UNIT #3
5-5049-1-4	WIRING DIAGRAM -OAD CENTER "A"
5-5049-1-5	WIRING DIAGRAM LOAD CENTER "A"

C. E. FILE

APR 1 1981

Stearns-Roger

C21700 MAR 23 '81

SR No F235.1 File No 05

DESIGN ELEC.:	DESIGN MECH.:	DRAWN BY:	DATE	CHK. BY:	DATE	APP'D. BY:
AC		AC/MA	9/12/80			

Abbott Power Corporation
7650 STAGE ROAD · BUENA PARK · CALIFORNIA 90620
A MEMBER OF NEMA

PROJ. NO.: 5049
DWG. NO.: 5049-1X
PAGE 5 OF 5

VU-COLOR REORDER NO. 1208
VU-VEL V-16

PROJECT NO. 5049-1

PAGE 1 OF 7

ITEM#	VENDOR	CATALOG # (ABBOTT STOCK #)	DESCRIPTION OF MATERIAL	MATERIAL LOCATED IN UNIT NO.															TOTAL QTY.
				1	2	3													
E 1-1	W	DS-416	AIR CIRCUIT BREAKER TYPE DS 480V 1600A FRAME 1600A TRIP, MANUALLY OPERATED WITH TYPE LONG TIME, SHORT TIME TRIP CHARACTERISTICS, ALSO WITH MANUAL RESET BELL ALARM 1 N.O., 1 N.C. AND WITH 2 N.O., 2 N.C. AUX. SW. AND SHUNT TRIP @ 125V D.C. (AMPTECTOR IIA) (W FIG. 3B, 11C, 11G)	1															1
E 1-2	W	DS-206	AIR CIRCUIT BREAKER, TYPE DS 480V 800AF/600AT MANUALLY OPERATED WITH TYPE LONG TIME AND INSTANTANEOUS TRIP CHARACTERISTICS, ALSO WITH MANUAL RESET BELL ALARM 1 N.O., 1 N.C. AND 2 N.O, 2 N.C. AUX. SWITCH AND SHUNT TRIP AT 125V D.C. (AMPTECTOR IIA) (W FIG. 3B, 11C, 11G)		2	2													4

3.2.2.7

SR No 12351 File No 66

C21700 23 '81

FINAL APR 1981

G.E. FILE

ABBOTT POWER CORPORATION

ENGINEER VC

DESIGNER EL. ME.

VU-COLOR REORDER NO. 1210

PROJECT NO. 5049- 1

PAGE 2 OF 7

3.2.2-8

ITEM#	VENDOR	CATALOG # (ABBOTT STOCK #)	DESCRIPTION OF MATERIAL	MATERIAL LOCATED IN UNIT NO.						TOTAL QTY.
				1	2	3			INC	
B 1-3	W	DS-206	AIR CIRCUIT BREAKER TYPE DS 480V 800AF/600AT MANUALLY OPERATED WITH TYPE LONG TIME AND SHORT TIME TRIP CHARACTERISTICS, ALSO WITH MANUAL RESET BELL ALARM 1 N.O., 1 N.C. AND 2 N.O., 2 N.C. AUX. SWITCH AND SHUNT TRIP AT 125V DC (AMPTECTOR IIA) (W FIG. 3B, 11C, 11G)	1						1
2-1	W		CELL FOR ITEM 1-1 CIRCUIT BREAKER	1						1
2-2	W	804A217G01	CELL FOR ITEM 1-2 AND 1-3 PLUS 2 FUTURE	1	3	3				7
3-1	W	140D719G04	5KV LOAD SWITCH 600A 3Ø 3W, 40KA FAULT CLOSE NON-FUSIBLE (89)						1	1

SR No. 4235.1 No. 07

C217000

APR 23 '81

FINAL

APR 1 1981

C.E. FILE

ABBOTT POWER CORPORATION

ENGINEER VC

DESIGNER EL. ME.

VU-COLOR REORDER NO. 1210

PROJECT NO. 5049-1

PAGE 3 OF 7

ITEM#	VENDOR	CATALOG # (ABBOTT STOCK #)	DESCRIPTION OF MATERIAL	MATERIAL LOCATED IN UNIT NO. 1	2	3	TOTAL QTY.
5-1	ABBOTT MAGNETICS	350-162	C.T. 1600:5A WITH ACCURACY CLASS OF .3 AT B-0.1 (CT)	3			3
7-1	ABBOTT MAGNETICS	450-480	P.T. 480/120V, 750VA (PT1, PT2)	4			4
8-1	W	6F495	CONTROL POWER TRANSFORMER 480V: 120/ 240V SINGLE PHASE, 3 KVA (FOR TRANSFORMER FAN)	1			1
10-1	ABBOTT POWER	2102-02	AMMETER 0-1600A WITH 5A COIL (AM)	1			1
11-1	ABBOTT POWER	2102-05	VOLTMETER 0-600V WITH 0-150V COIL (VM)	1			1

3.2.2.9 A

FINAL APR 1981

SR No F2351 File No 08

C217000

CE FILE

ABBOTT POWER CORPORATION

VU-COLOR REORDER NO. 1210

ENGINEER VC

DESIGNER EL. ME.

PROJECT NO. 5049-1 PAGE 4 OF 7

ITEM#	VENDOR	CATALOG # (ABBOTT STOCK #)	DESCRIPTION OF MATERIAL	MATERIAL LOCATED IN UNIT NO.															TOTAL QTY.
				1	2	3													
24-1	G.E.	12IAV53K1A	TYPE IAV UNDERVOLTAGE RELAY, 55 TO 140V (27UV)		1														1
24-2	G.E.	12IAV51D1A	IAV OVERVOLTAGE RELAY, 199V AC ADJUSTABLE 16-64V (59G)		1														1
34-1	OHMITE	AS DESCRIBED	200 OHM 250 WATT GROUNDING ADJUSTABLE RESISTOR FOR USE WITH ITEM 24-2 (R)		1														1
41-1	G.E.	10AA009	SBM AMMETER SWITCH 4 POSITION (1-2-3-OFF), ROUND HANDLE (AS)	1															1
50-1	FPE	EON-6	6 AMP FUSES, 250V																3
50-2	FPE	JCL-3	3 AMP 600V FUSES																5

APR 21 1981

SR No E231.1 File No 09

C2 1700

MAR 23 '81

G.E. FILE

3.2.2-10

ABBOTT POWER CORPORATION

ENGINEER VC

DESIGNER EL. ______ ME. ______

VU-COLOR REORDER NO. 1210

PROJECT NO. 5049-1

PAGE 5 OF 7

3.2.2-11

ITEM#	VENDOR	CATALOG # (ABBOTT STOCK #)	DESCRIPTION OF MATERIAL	MATERIAL LOCATED IN UNIT NO.															TOTAL QTY.
				1	2	3													
50-3	BUSSMAN	JHC 15	CPT PRIMARY FUSES, 600V 15A																2
50-4	FPE	EON-20	CPT SECONDARY FUSES, 250V, 20A																2
53-1	G.E.	116B4078	2 POLE PULL APART FUSE HOLDERS 30A 600V																2
53-2	G.E.	116B4075	3 POLE PULL APART FUSE HOLDERS 30A 600V																1
53-3	MARATHON	F30A2S	30A 2 POLE FUSE HOLDERS																3
△C 56-1	MARATHON	1512.	12 POINT T/B 600V *WITH COVERS*																LOT
△E 56-2	MARATHON		2 POLE POWER BLOCK *WITH COVERS*	1	1	1													3

ABBOTT POWER CORPORATION

ENGINEER VC

DESIGNER EL. ________ ME. ________

VU-COLOR REORDER NO. 1210

PROJECT NO. 5049-1 PAGE 6 OF 7

ITEM#	VENDOR	CATALOG # (ABBOTT STOCK #)	DESCRIPTION OF MATERIAL	MATERIAL LOCATED IN UNIT NO.															TOTAL QTY.
				1	2	3			IN(	BUS DUCT									
△C 57-1	MARATHON	1504SC	SHORTING T/B 4 POINT (STB) WITH COVERS																1
60-1	BURNDY	YA26 -2N	2/0 LUGS INCOMING CABLES						3										3
63-1	ANIXTER	7315	FLEXIBLE CONNECTOR 550A																12
	ROYAL																		
△B 72-1	FPE	PMT-1	THERMOSTAT 22A						1	1									2
△B 73-1	CHROMALOX	OT-1225	HEATER 120V 250W						1	1									2
90-1	W		BREAKER LEVERING-IN CRANK																2
90-2	W		BREAKER LIFTING YOKE																1
90-3	ABBOTT		TRAVELLING TYPE LIFTING DEVICE																1
	POWER																		

3.2.2-12

FINAL APR 1981

Stearns-Roger

C21700

SR No E335.1 File No 11

C. E. FILE

ABBOTT POWER CORPORATION

ENGINEER VC

DESIGNER EL._____ ME._____

VU-COLOR REORDER NO. 1210

PROJECT NO. 5049-1

ITEM#	VENDOR	CATALOG # (ABBOTT STOCK #)	DESCRIPTION OF MATERIAL	MATERIAL LOCATED IN UNIT NO.	TOTAL QTY.
100-1	ABBOTT		600 VOLT 1600 AMP NON SEGREGATED PHASE		LOT
			BUS DUCT ALUMINUM BUS WITH STEEL		
			ENCLOSURE OF 11 USS GAGE SHEET STEEL		
100-2			LOAD CENTER TRANSFORMER LIQUID FILLED		1
			1000/1150 KVA 4160 TO 480Y/277V ALL		
			PER SPECIFICATION S-RF2351, C-21700		
			PAGES II-DS-4, "B" II-DS-8,9 "B" ;		
			II-DS-10-11 PARA 6-A-A; ALL ATTACHED		
100-3	W		5 STAR MOTOR CONTROL CENTER 480V 30		2
			3W 60HZ NEMA 12 ENCLOSURE, FRONT OF		
			BOARD, CLASS IB WIRING AND PER		
			CUSTOMER SPECIFICATION C-21700 S-RF235.1		
			SEC I, II AND DWGS. E2-3 AND E2-4		

FINAL APR 1 1981

Stearns-Roger

C21700 MAR 23 '81

SR No F235.1 File No 012

C.E. FILE

ABBOTT POWER CORPORATION

ENGINEER VC
DESIGNER EL. ME.

VU-COLOR REORDER NO. 1210

LETTER OF CLARIFICATION

1. CUSTOMER SPECIFICATION S-R F 235.1 CALLED FOR TIN PLATED AND SILVER PLATED BUS JOINTS. ABBOTT POWER WILL FURNISH TIN PLATED ALUMINUM BUS JOINTS FOR SWITCHGEAR, BUS DUCT AND MOTOR CONTROL CENTER. CUSTOMER APPROVAL REQUESTED.

2. CUSTOMER GENERAL SPECIFICATION JF16.0240 REQUIRES WELDED ALUMINUM BUS JOINTS, HOWEVER, ABBOTT POWER'S STANDARD USES BOLTED JOINTS. CUSTOMER APPROVAL FOR USING ABBOTT POWER'S STANDARD IS REQUESTED.

3. CUSTOMER SPECIFICATION S-RF 235-1 II-DS-10 CALLED FOR BREAKER LIFTING DEVICE. TRAVELLING TYPE LIFTING DEVICE AS SHOWN ON DRAWING 1-5049-1-1 WILL BE PROVIDED.
CUSTOMER IS REQUESTED TO CHECK AND APPROVE.

4. SWITCHGEAR AND BUS DUCT WILL BE PAINTED ANSI #61 LIGHT GREY AND MOTOR CONTROL CENTER WILL BE PAINTED WITH MANUFACTURER'S STANDARD TWO TONE GREY ANSI #24/70. CUSTOMER APPROVAL IS REQUESTED.

5. SINGLE LINE DIAGRAM OF THE MOTOR CONTROL CENTER IS PART OF CUSTOMER'S SPECIFICATION. ABBOTT POWER WILL NOT FURNISH SINGLE LINE DIAGRAM FOR THE MOTOR CONTROL CENTER. CUSTOMER APPROVAL IS REQUESTED.

6. CUSTOMER SPECIFICATION S-R F235.1 - III DS-4 SPECIFIED FOR STARTER OR CIRCUIT BREAKER DESIGNATION WHICH IS DIFFERENT FROM MANUFACTURERS STANDARD. A CROSS REFERENCE NUMBER IS PROVIDED ON THE THREE LINE DIAGRAM FOR CUSTOMER REFERENCE.

FI [illegible]

7. SIZE OF THE MOTOR CONTROL CENTER WILL BE AS SHOWN ON DRAWING #1-5049-2-1.CUSTOMER IS REQUESTED TO CHECK AND APPROVE.

8. MOTOR CONTROL CENTER WILL BE WIRED ACCORDING TO CUSTOMER WIRING DIAGRAM JF30.40.05 (3/14/79), JF30.40.10 (5/1/79), SK-E75 (7/11/80) AND SK-E76 (7/11/80) AND SPARE CONTACTS WILL BE FURNISHED AS SHOWN ~~ON THESE WIRING DIAGRAMS. CU~~STOMER IS REQUESTED TO CHECK AND APPROVE.

A

C. E. FILE

F235.1 C.I.

DESIGN ELEC.:	DESIGN MECH.:	DRAWN BY:	DATE	CHK. BY:	DATE	APP'D. BY:
AC		AC/MA	9/15/80			

Abbott Power Corporation
7650 STAGE ROAD · BUENA PARK · CALIFORNIA 90620
A MEMBER OF NEMA

PROJ. NO.: 5049
DWG. NO.: 5049-L
PAGE 1 OF 1

1-1
1-2
1-3
2-1
2-2

[illegible]

Modern design Type DS Low Voltage Metal Enclosed Switchgear and Circuit Breakers provide

- Integral solid-state type breaker tripping systems
- "Metal-clad" safety features
- *Two-step stored-energy breaker closing*
- Glass polyester insulation

and many other features for coordinated, safe, convenient, trouble-free and economical control and protection of low-voltage distribution systems.

COMMENT: FILE # 019
STD. AMPECTOR II A SHOULD BE
INCLUDED IN B/M ITEMS
5049-1 ITEM; 1-1, 1-2 & 1-3
(REF SR FILE # 014 THRU # 024.)

☐ REVIEWED/NO COMMENTS
☐ REVIEWED/SEE COMMENTS
☑ REVISE PER COMMENTS & RESUBMIT FOR REVIEW
☐ SEE LETTER OF TRANSMITTAL
ENG. DEPT. BY ________ DATE OCT 1 4 1980

NEITHER REVIEW, COMMENT, NOR REVISION RELIEVES MANUFACTURER OR CONTRACTOR FROM RESPONSIBILITY FOR COMPLIANCE WITH SPECIFICATIONS OR WITH ALL OTHER CONTRACT REQUIREMENTS.

RETURN TO
Stearns-Roger
INCORPORATED
ON OR BEFORE

FINAL MAR 3 1981

C. E. FILE
Stearns-Roger
C21700 SEP 22 '80
SR No E235.1 File No 014

☐ SEE LETTER OF TRANSMITTAL
ENG. DEPT. BY [redacted] DATE
[redacted]
[illegible] REVIEW, COMMENT [illegible] RELIEVE [illegible]
OF CONTRACTOR FROM RESPONSIBILITY FOR COMPLIANCE WITH SPECIFICATIONS OR WITH ALL OTHER CONTRACT REQUIREMENTS
RETURN TO
Stearns-Roger
INCORPORATED

atings
600 volts ac
0 to 4000 Amperes continuous
2,000 to 200,000 amperes interrupting
apacity

Features

Two-Tone Standard Indoor Finish—Pearl gray (ANSI No. 61) with contrasting charcoal gray on breaker compartment doors.

Four Position Drawout—Breakers can be in connected, test, disconnected or remove position with compartment doors closed.

Standard Welded Aluminum Main Buses—Reduce maintenance. ~~Purchaser's~~ connections are silver plated copper. (All-copper buses optional).

Wiring Protection—Provided by slotted plastic wiring channels with removable covers, and enclosed steel troughs for inter-unit cross wiring.

Isolated Incoming Connections—Reduce possibility of fault transmission between incoming source and main bus.

Protection During Levering Operation—When levering the breaker between the connected, test and disconnected positions the operator is fully protected by a steel barrier (faceplate) from contact with live parts and from arcs and hot gases.

Two-Step Stored Energy Closing Mechanism—Spring charging (1) and spring release to close breaker (2) are independent operations, and always give positive control of the instant of closing.

Motor Operated Stored-Energy Closing Mechanisms are supplied on electrically operated breakers. Standard control voltages are 48, 125 and 250 dc, and 120 and 240 ac.

Remote Closing and Tripping can be accomplished with manually operated breakers, by charging the closing mechanism manually, and closing and tripping it remotely through electric closing release and shunt trip coils, available as optional attachments.

Closing Spring Automatic Discharge—Mechanical interlocking automatically discharges the closing springs when the breaker is removed from its compartment.

Breaker Inspection—When withdrawn on the rails, breaker is completely accessible for visual inspection; tilting is not necessary. The rails are permanent parts of every breaker compartment.

Current Transformers for metering and instrumentation are mounted in the breaker compartments, and are front accessible. Accuracies meet ANSI Standard C37.20, Section 20-4.6.3 for Low Voltage Metal Enclosed Switchgear.

Integral Solid-State Type Breaker Overcurrent Trip Systems—provide maximum reliability and excellent repeatability, and require minimum maintenance. No external control source is required. Continuous stepless current pickup and time delay adjustments are made with sealed potentiometers, with no fixed taps or bands and no contact corrosion. Two types available: Standard Amptector II-A and Optional Amptector I-A.

Ground Fault Tripping is available optionally as an integral part of Amptector I-A.

Change in Trip Rating—The overcurrent trip pickup range is established by the rating of the current sensors on the breaker. A continuous long delay pickup adjustment 50% to 125% of sensor rating is provided. The sensors can be readily changed to provide a different pickup range.

Glass Polyester Insulation—Westinghouse-produced glass polyester, with excellent [illegible] dielectric and thermal properties, is used for the insulation system.

Double Steel Safety Barrier in front of each breaker during normal operation provides maximum safety.

Interphase Barriers—on breakers provide maximum insulation security. The barriers are easily removable for breaker inspection.

Provision for Padlocking—All breakers include provision for padlocking open to prevent electrical or manual closing. This padlocking also secures the breaker in the connected, test or disconnected position by preventing levering.

Ease of Inspection and Maintenance—Type DS switchgear and breakers are designed for maximum accessibility and the utmost facility of inspection and maintenance.

Conformity to Standards—Type DS switchgear and breakers conform to the following standards: NEMA SG3 & SG5, ANSI C37.13, C37.16, C37.17 & C37.20 (IEEE No. 27

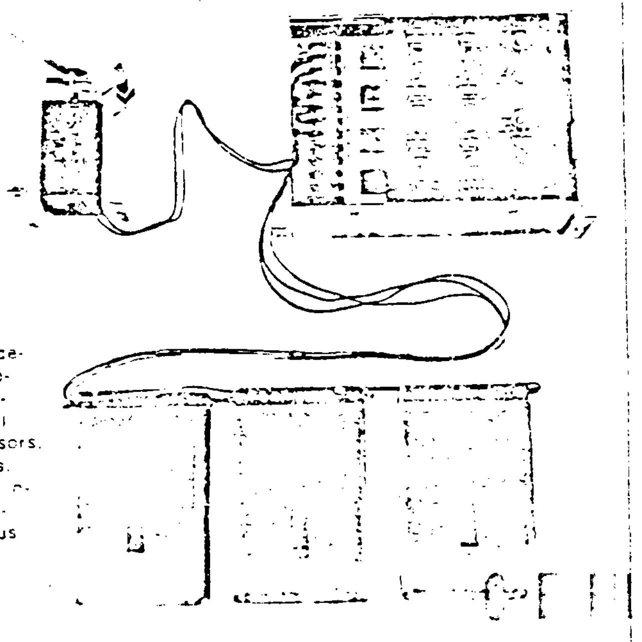

Solid-State Trip

Provides continuous wide-range adjustability. Step-type adjustment is eliminated. Energy and signal provided by current sensors, no potential connections. Long delay, short delay, instantaneous and ground-fault protection in various combinations.

Stearns-Roger

C21700 SEP 22 '80

SR No F235-1 File No 015

Metal-Clad Safety Features

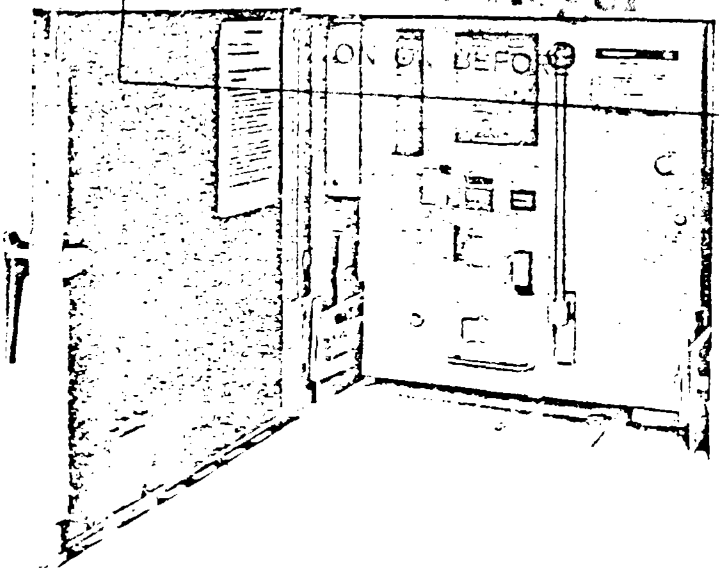

Outer door with quick-opening latches closes compartment completely with breaker in or out. All controls are protected from unauthorized or accidental operation. Full-sized metal shield on breaker face protects operator from live parts, arcs and hot gases while operating, racking or checking Amptector settings. Double interlocked device prevents racking until contacts are open; contacts can't be closed until racking is complete. Separate cable entrance and bus compartments can be provided; removable barriers give access to bus compartment for inspection or cleaning.

Two-step Stored-energy Closing

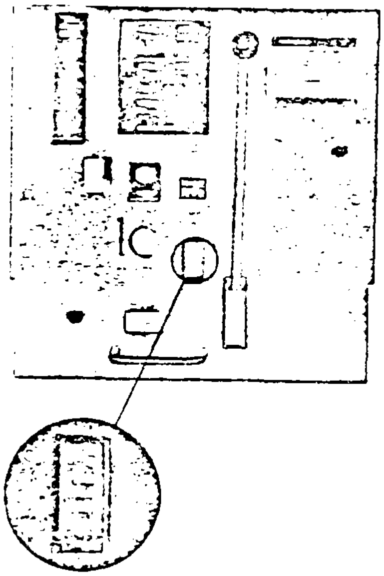

Gives operator positive control of closing after spring mechanism is charged. Breaker can't close while you're still charging. Operation is optional—full manual, full electric, or manual charge and remote electric release.

On manual breakers, the spring mechanism is manually charged by one downward stroke of the lever without pumping, and released by the mechanical "push-to-close" release button. On electrically operated breakers, the mechanism is normally charged and released electrically, but can be charged manually by pumping an accessory lever 10 to 12 times and released mechanically.

An interlock discharges the closing springs as the breaker is removed from the compartment. The system is patterned after 5 Kv and 15 Kv metal-clad switchgear.

Glass Polyester Insulation

Offers far better mechanical, thermal and electrical properties than phenolics. It has the mechanical strength to resist shortcircuit forces; is highly resistant to heat, flame and moisture; and has been designed with generous creepage distances. Often used on 5 Kv and 15 Kv metal-clad switchgear—Westinghouse gives these materials to you on all insulating parts in Type DS 600 volt switchgear.

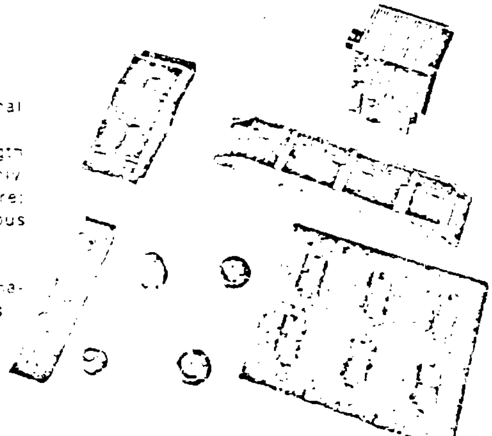

[redacted]

[illegible] FOR REVIEW

[illegible] TRANSMITTAL

ENG. DEPT. B[redacted] DATE OCT 14 19[illegible]

NEITHER [illegible] RELIEVES [illegible] OF CONTRACTOR FROM RESPONSIBILITY TO COMPLIANCE WITH SPECIFICATIONS [illegible] CONTRACT REQUIREMENTS.

RETURN TO

Stearns-Roger

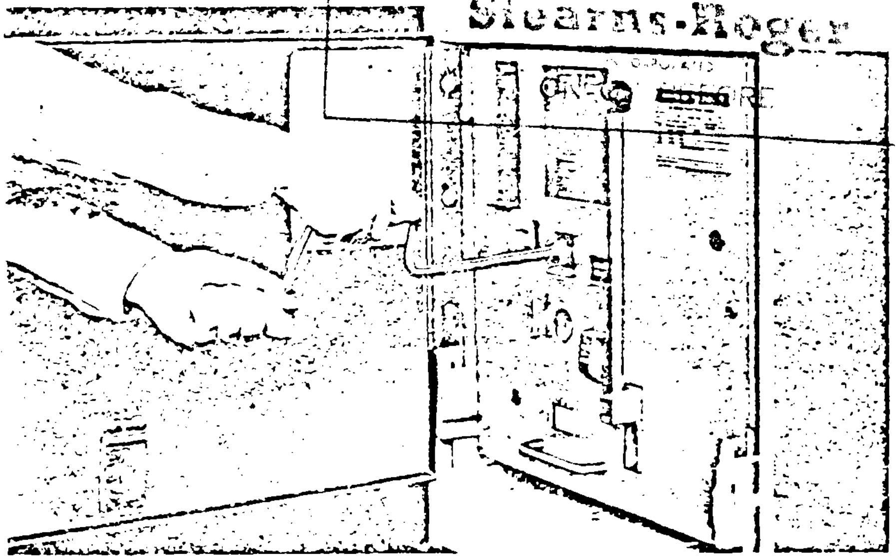

DS Breaker Levering Operation

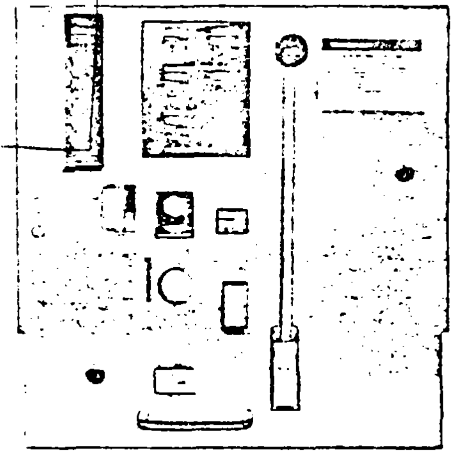

DS Breaker Faceplate

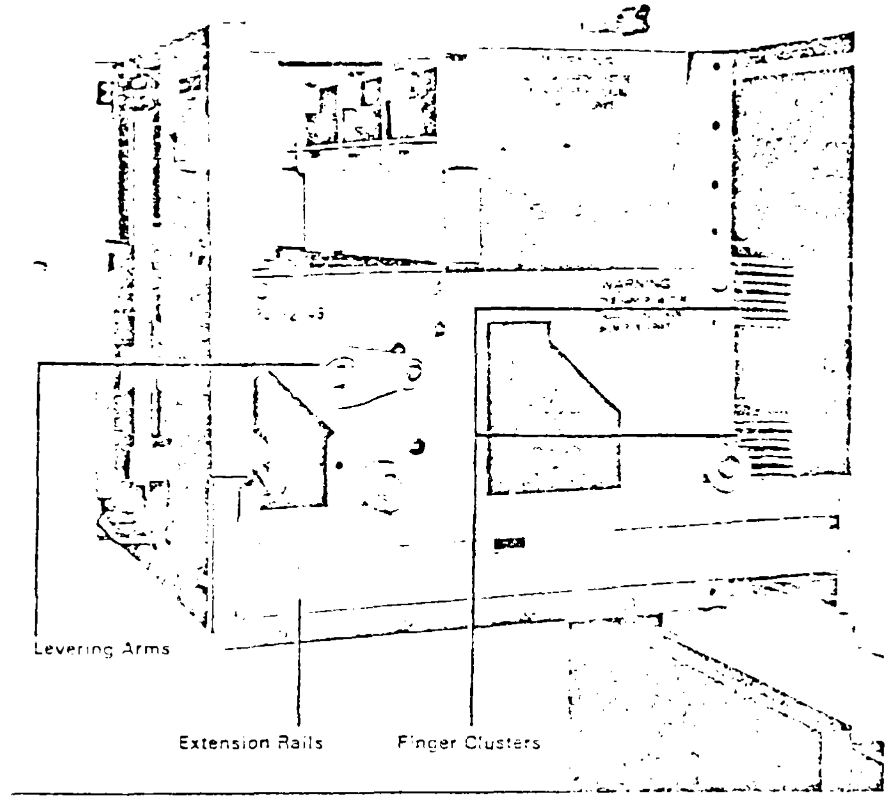

DSL Breakers and Combinations

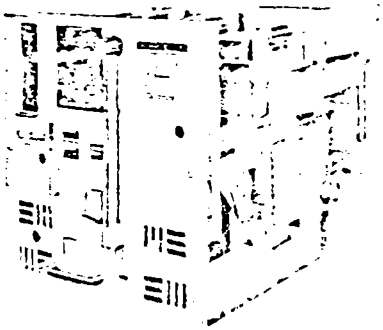

Type DSL Breakers are coordinated combinations of Type DS breakers and series connected current limiting fuses. They are intended for applications requiring the overload protection and switching functions of air circuit breakers on systems whose available fault currents exceed the interrupting rating of the breakers alone, and/or the withstand and interrupting ratings of "downstream" circuit components.

C. E. FILE

Stearns-Roger

C21700 SEP 22 '80

SR No F235-1 File No 017

[redacted] SUBMITTED FOR REVIEW
ENG. DEPT. B[redacted] TRANSMITTAL
DATE OCT 1 1 '80
[illegible] REVISION [illegible]
[illegible] RESPONSIBILITY FOR COMPLIANCE WITH SPEC
[illegible] CONTRACT REQUIREMENTS.
RETURN TO
ON OR BEFORE

Arc Chute

There are three basic means of extinguishing an arc: lengthening the arc path; cooling by gas blast or contraction; deionizing or physically removing the conduction particles from the arc path. It was the discovery by Westinghouse of this last method which made the first large power air circuit breaker possible.
The De-ion® principle is incorporated in all of these circuit breakers. This makes possible faster arc extinction for given contact travel; assures positive interruption and minimum contact burning.

Levering Mechanism

The worm gear levering mechanism is self-contained on the breaker drawout element and engages slots in the breaker compartment. A removable crank is used to lever the breaker between the Connected-Test-Disconnected positions.
Mechanical interlocking is arranged so that levering cannot be accomplished unless the breaker is in the tripped position.

Stored Energy Mechanism

A cam-type closing mechanism closes the breaker. It receives its energy from a spring which can be charged by a manual handle on the front of the breaker or by a universal electric motor.
Release of the stored energy is accomplished by manually depressing a bar on the front of the breaker or electrically energizing a releasing solenoid.

Contacts

All air circuit breakers have solid block, silver tungsten, inlaid main contacts. This construction insures lasting current-carrying ability, which is not seriously impaired even after repeated fault interruptions or repeated momentary overload.
It is not necessary to provide a substantial margin of safety above the actual circuit load current to prevent contact deterioration.
The main contacts are of the butt type and are composed of a multiplicity of fingers to give many points of contact without alignment being critical.

All Type DS breakers are available as either manually or electrically operated.

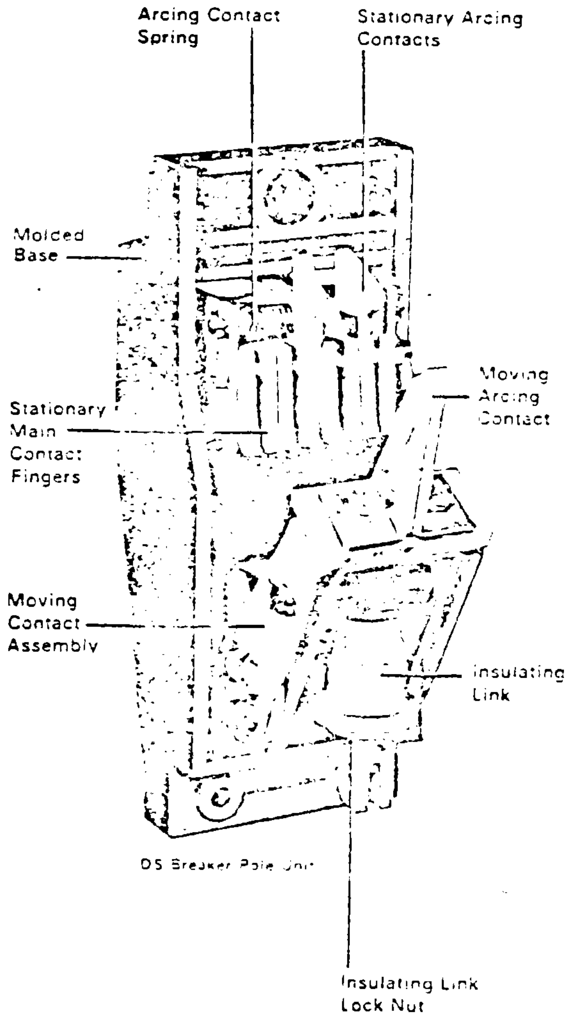

DS Breaker Pole Unit

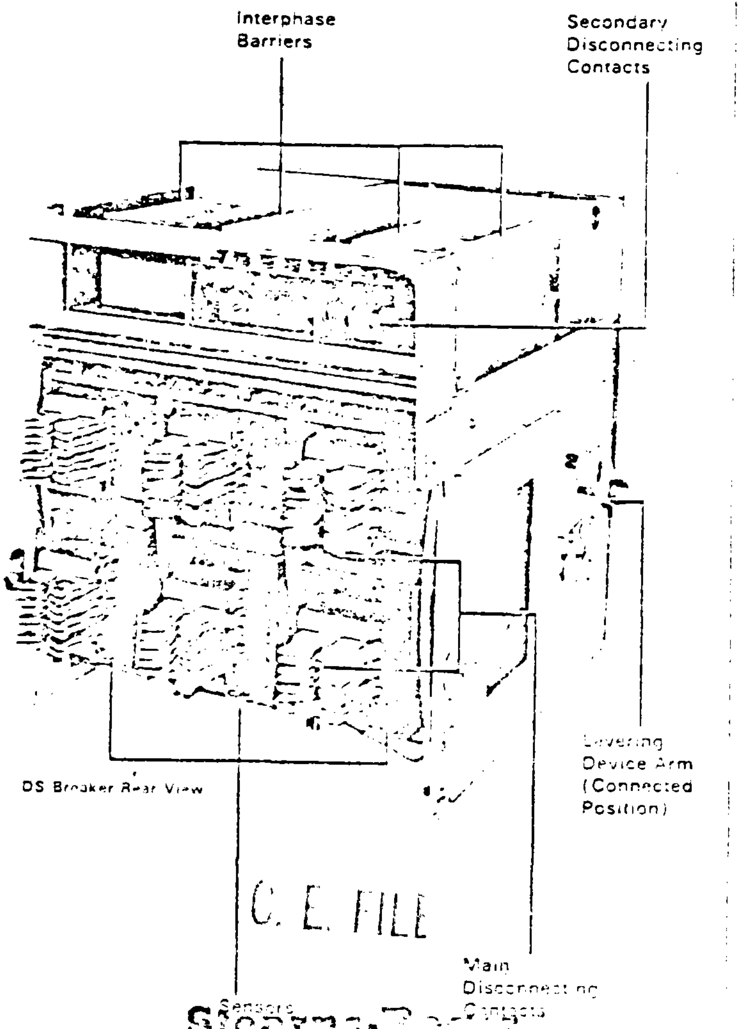

DS Breaker Rear View

C. E. FILE

Stearns-Roger

FINAL MAR 8 1981

C21700 SEP 22 '80

F2351 018

SR No.

[redacted] RESUBMIT FOR REVIEW
☐ SEE LETTER OF TRANSMITTAL
ENG. DEPT. BY [redacted] DATE OCT 14 1980
NEITHER REVIEW, COMMENT, NOR REVISION RELIEVES MANUFACTURER OR CONTRACTOR FROM RESPONSIBILITY FOR COMPLIANCE WITH SPECIFICATIONS OR WITH ALL OTHER CONTRACT REQUIREMENTS.

RETURN TO
Stearns-Roger
INCORPORATED
ON OR BEFORE

Standard Amptector II-A Solid-State Trip

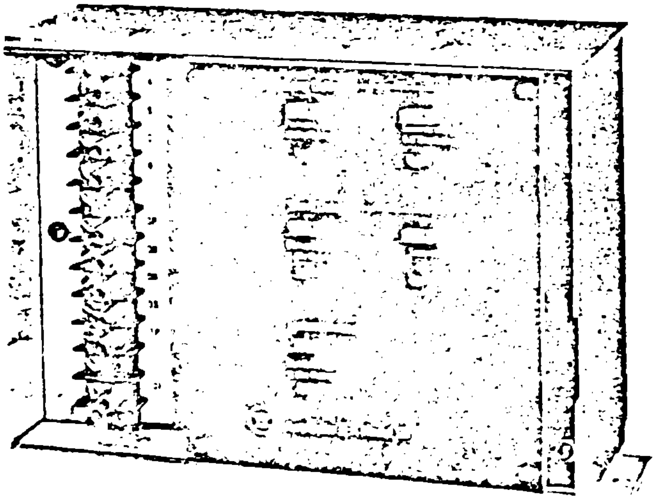

The Westinghouse Amptector II-A is a solid-state device that provides adjustable overcurrent tripping for Westinghouse Type DS low-voltage a-c power circuit breakers. Only one Amptector II-A is required per breaker, and it receives all its energy from a set of sensors—one mounted on each pole of the breaker. It develops an output for an associated trip actuator when preselected conditions of current magnitude and duration are exceeded.

The device can be supplied in three models or combinations of three independent continuously adjustable overcurrent tripping functions: long delay, short delay and instantaneous. These models are:

DU (Dual)—Long delay and instantaneous
SE (Selective)—Long delay and short delay
TR (Triple)—Long delay, short delay and instantaneous

Model DU is the basic standard, and will be supplied when not otherwise indicated or required.

Amptector II-A Characteristics

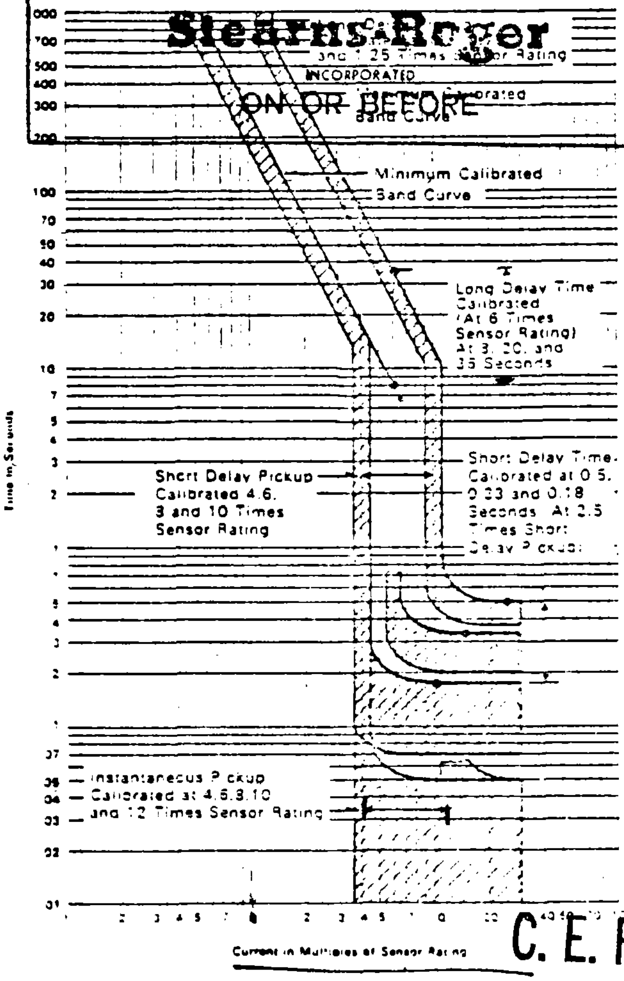

C. E. FILE

Stearns-Roger

C21700 SEP 22 '80

SR No F235-1 File No 019

Amptector I-A and II-A

Each Amptector includes terminal receptacles to permit easy field checking of operation and calibration with an external power supply. A specially designed portable test device with a plug to match the Amptector receptacle is available to provide the utmost in simplicity for checking Amptector operation.

Available Sensor Ratings

Breaker	Frame Size, Amperes	Sensor Ratings, Amperes
DS-206, DSL-206 or DS-206S	800	50, 100, 150, 200, 300, 400, 600, 800
DS-416, DSL-416 or DS-416S	1600	100, 150, 200, 300, 400, 600, 800, 1200, 1600
DS-420	2000	2000
DS-632	3200	2400, 3200
DS-840	4000	4000

The narrow-band characteristic curves graphically illustrate the close coordination obtainable in breaker systems with Amptector tripping devices. Repeatability within 2%.

The particular breaker current rating for any breaker frame size is determined by the rating of the sensor used.

The breaker current rating for any frame size can be changed by simply changing the sensors, which are easily removed from the breaker drawout element. The wide range of long-delay pickup makes one set of sensors suitable for a number of current ratings. The Amptector itself need not be changed when the associated sensors are changed.

FINAL MAR 3 1981

☐ REVIEWED/NO COMMENTS
[redacted]
...MIT FOR REVIEW
☐ SEE LETTER OF TRANSMITTAL
ENG. DEPT. BY [redacted] DATE OCT 14 1980
NEITHER REVIEW, COMMENT, NOR REVISION RELIEVES MANUFACTURER
OR CONTRACTOR FROM RESPONSIBILITY FOR COMPLIANCE WITH SPECI-
FICATIONS OR [illegible] ALL OTHER CONTRACT REQUIREMENTS.
RETURN TO
Stearns-Roger
INCORPORATED
ON OR BEFORE

Optional Amptector I-A Solid-State Trip

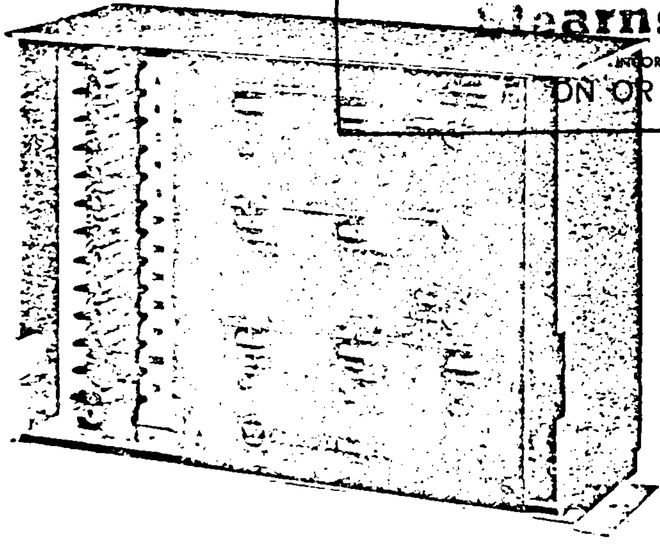

Amptector I-A Characteristics

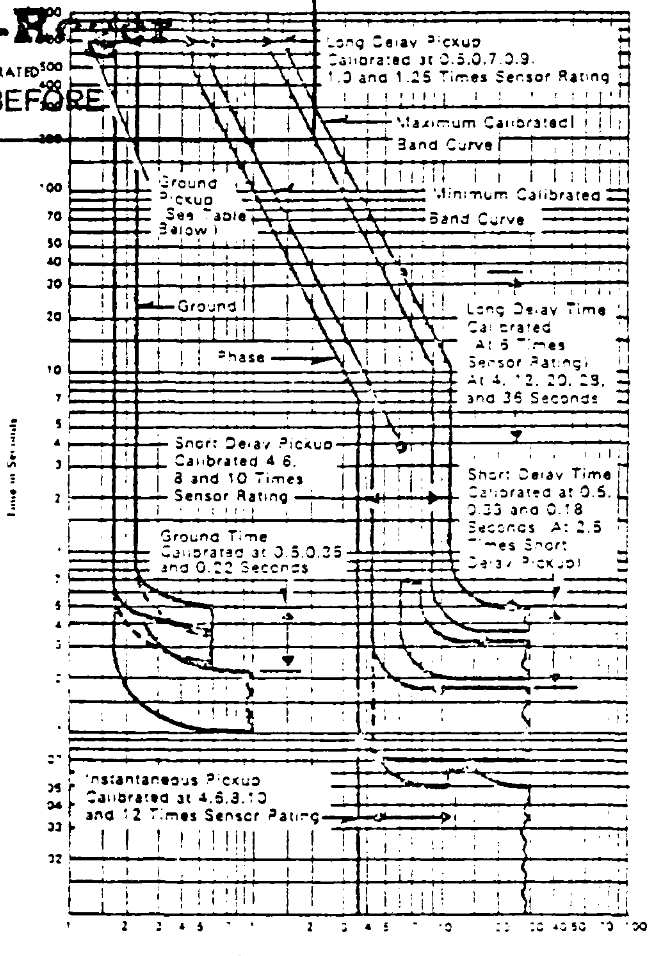

Offers all of the features of Standard Amptector II-A, plus:

- Integral ground fault protection (optional), with adjustable pickup and delay.
- Resettable operation indicators for Ground, Overload and Short circuit.

Amptector I-A can be supplied in various combinations of four independent continuously adjustable overcurrent tripping functions:

Long delay (L)
Short delay (S)
Instantaneous (I)
Ground (G)

The following combinations are available:

LI	LIG
LS	LSG
LSI	LSIG

Model LI is the basic standard and will be supplied when not otherwise indicated.

Stearns-R[illegible] C. E. FILE
C21700 SEP 22 '80

Amptector I-A

SR No F235-1 File No 020

Ground Pick-Up Value—Amperes

Dial Setting	Sensor Rating 50	100	150	200	300	400	600	800	1200	1600	2000	2400	3200	4000	Secondary Current ①
A	13	57	60	65	80	110	145	180	260	330	400	530	640	800	1.0
B	18	67	75	85	110	150	205	260	395	505	600	770	1000	1200	1.5
C	22	75	85	100	130	185	250	325	480	625	750	960	1200	N.A.	1.8
D	33	100	120	145	200	270	395	500	720	970	1200	N.A.	N.A.	N.A.	3.0

All pick up values may vary ± 10%

① Current of this value from the secondary of an external ground transformer will cause the ground element to function. Ground element pick-up can also be tested using this value. All sensors must be disconnected during test.

FINAL MAR 3 1981

☐ REVIEWED/NO COMMENTS

[redacted]

RESUBMIT FOR REVIEW

☐ SEE LETTER OF TRANSMITTAL

ENG. DEPT. BY [redacted] DATE OCT 1 4 1980

NEITHER REVIEW, COMMENT, NOR REVISION RELIEVES MANUFACTURER OR CONTRACTOR FROM RESPONSIBILITY FOR COMPLIANCE WITH SPECIFICATIONS OR WITH ALL OTHER CONTRACT REQUIREMENTS.

RETURN TO Stearns-Roger INCORPORATED ON OR BEFORE

Optional Breaker Attachments and Accessories

(a) Shunt trip on manually operated breakers, for any standard control voltage. An auxiliary switch is also required.

(b) Auxiliary contacts on manually operated breakers, usually consisting of one 4 contact auxiliary switch. Maximum of three 4 contact auxiliary switches available on any breaker, manually or electrically operated. The contact rating is 10 amperes. (Two 4 contact switches are standard on each electrically operated breaker.)

(c) Compartment position switch ("TOC"), 6 or 12 contact, actuated by movement of drawout breaker between the connected and test positions. Most common uses are for disconnecting remote control circuits of electrically operated breaker, and for bypassing "b" interlocking auxiliary contacts, when breaker is withdrawn to test position.

(d) Undervoltage trip (ac and dc available) Acts to trip the breaker when the voltage on its solenoid coil is insufficient to restrain a spring-loaded core. The dropout point is within 30 to 60 percent of the nominal coil voltage and is not adjustable. Available as either instantaneous or time delay type. The time delay is within 2 to 7 seconds after zero voltage occurs, and is not adjustable. The device automatically resets when the breaker opens; approximately one minute is required for resetting of the time delay type.

(e) Overcurrent trip switch (OTS). A latching type switch with two independent contacts either normally open or normally closed. Operates only when the breaker is tripped automatically on an overload or fault condition (including Amptector I-A integral ground fault tripping). It may be used for alarm and/or interlocking circuits. Resetting is done by a pushbutton on the breaker faceplate, or by a remote switch through an optional reset coil.

(f) High load switch (HLS—available with Amptector I-A only). A self resetting relay which picks up on an overload condition at a lower value than the long delay pickup setting of the tripping device, thus, giving advance warning of an overload condition. The device is completely independent of the overcurrent tripping system, does not trip the breaker, and does not replace any protection in any phase. Adjustment is from 60 to 100 percent of the long delay pickup setting. The time delay is fixed and is approximately one minute. One normally open contact is provided.

(g) Electric Lockout (Manual Breakers). In order to close the breaker after manually charging the closing mechanism, it is necessary to operate an electrical pushbutton on the breaker faceplate. This pushbutton is in series with any required external interlocking. The mechanical "push-to-close" bar is made inoperative when the breaker is in the connected position. An electric spring release attachment (operated by the electrical pushbutton), a charged-spring limit switch, and an auxiliary switch are required.

(h) Electric close release on manually operated breakers, for any standard control voltage. Breaker can be closed by remote control switch or pushbutton after spring is manually charged. A charged-spring limit switch and an auxiliary switch are also required.

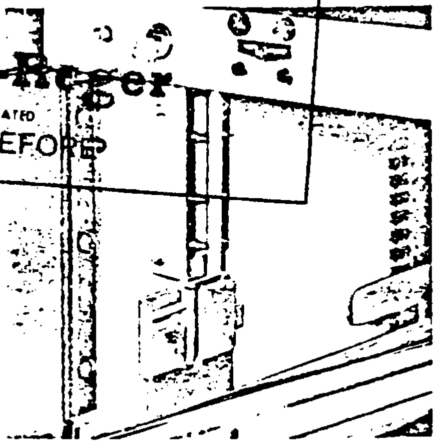

Key Interlock—Blocking Position

(i) Key interlock. Operative only after breaker has been withdrawn beyond disconnected position. Blocks any breaker from being levered into compartment. Breaker can be stored in compartment, and can be completely removed for maintenance or for use as a spare without disturbing interlock. No modification of breaker required.

(j) Operation counter.

(k) Ac capacitor trip.

(l) Latch check switch.

(m) Mechanical interlock.

C. E. FILE

Stearns-Roger

C21700 SEP 22 '80

SR No F2351 File No 021

Standard Control Diagram

Standard control diagram for Type DS electrically operated breaker, for ac or dc control source.

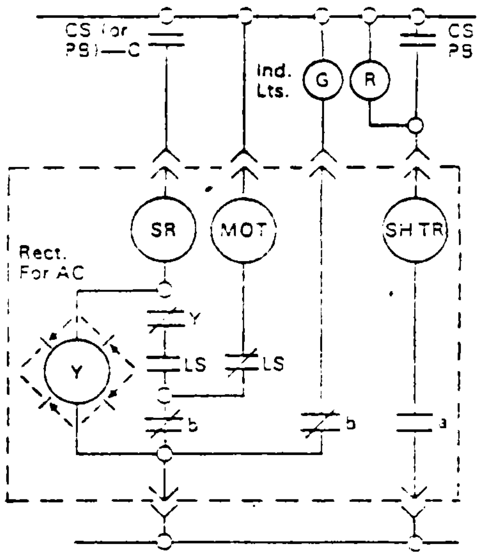

Legend

LS —Limit Sw. for Closing Spring
MOT —Motor for Spring Charging
SH TR—Shunt Trip
SR —Spring Release
Y —Anti-Pump Relay

Description of Operation

1- When Bkr opens, motor is energized through LS & "b" contact.
2- Motor runs and charges Closing Spring
3- When Closing Spring fully charged, LS contacts reverse.
4- Closing CS-C contact energizes SR Coil through Y, LS & "b" contacts.
5- When Breaker closes, "b" opens and Y Coil is energized in series with SR Coil
6- Y contact opens to open SR Coil circuit & prevent pumping should breaker open while CS-C is held closed. Y Coil has very low drop-out voltage.

FINAL MAR 3 1981

☐ REVIEWED/NO COMMENTS
[redacted] SUBMIT FOR REVIEW
☐ SEE LETTER OF TRANSMITTAL
ENG. DEPT. BY [redacted] DATE OCT 14 1980
NEITHER REVIEW, COMMENT NOR REVISION RELIEVES MANUFACTURER OR CONTRACTOR FROM RESPONSIBILITY FOR COMPLIANCE WITH SPECIFICATIONS OR WITH ALL OTHER CONTRACT REQUIREMENTS.
RETURN TO Stearns-Roger INCORPORATED ON OR BEFORE

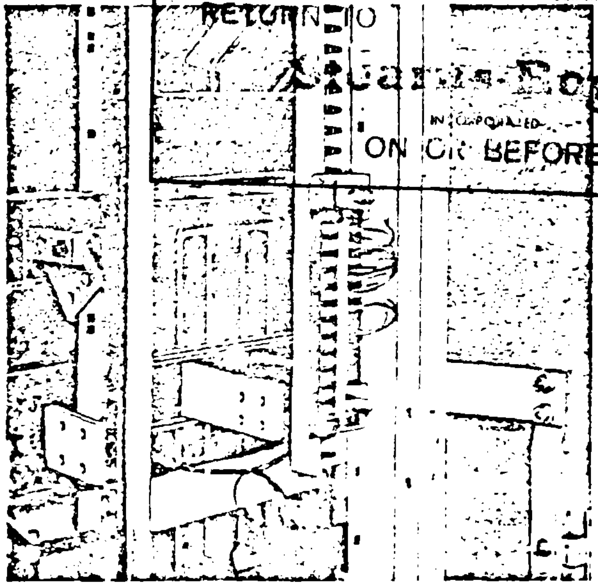

Terminal Blocks

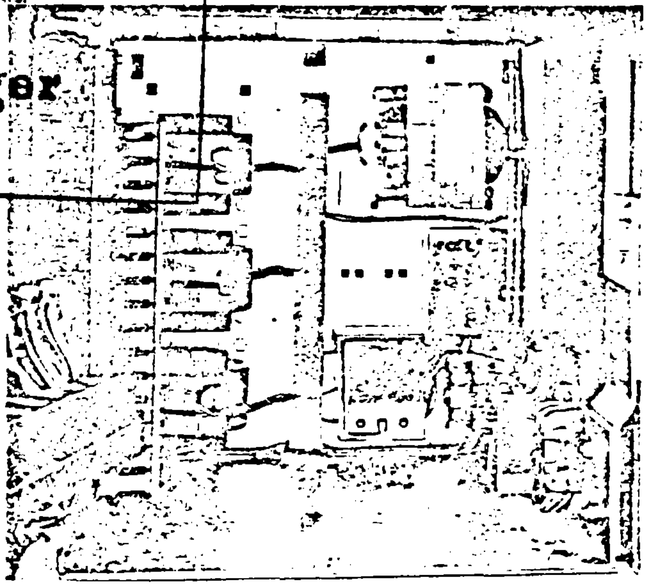

Potential Transformer and Control Power Transformer with Primary and Secondary Fuses

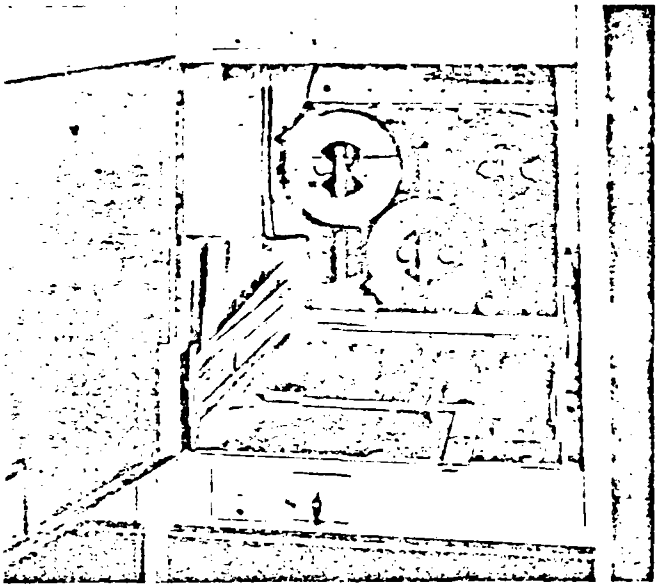

Current Transformers

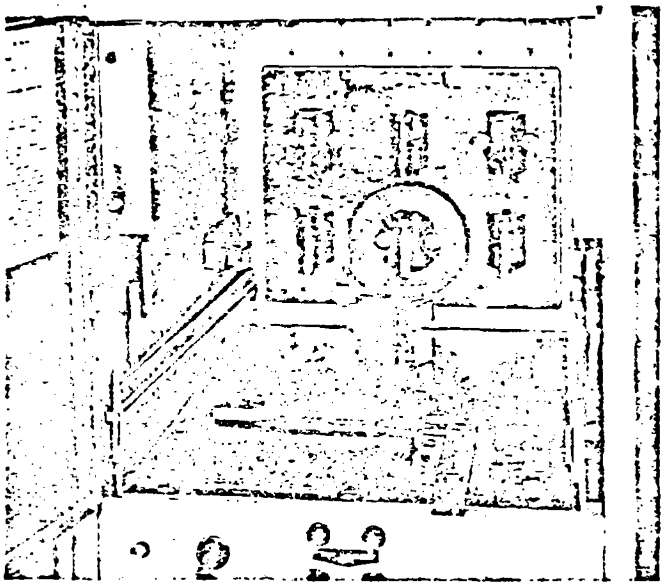

Insulating Boots

Insulation
All insulation is Westinghouse glass polyester, which has been compounded to include the dielectric and mechanical strength necessary for the application. It is highly resistant to heat, flame and moisture, and has been designed with generous creepage distances.

Bus Isolation
The incoming line is isolated from the main bus to reduce the possibility of fault transmission between them. Bus sections are also isolated at a bus tie breaker.

Wiring
Enclosed plastic wiring troughs are used throughout the switchgear. Control circuit terminal blocks are mounted on the rear frame where they are readily accessible for purchaser's connections and inspection. Main circuit terminals may be oriented to suit cable entrance.

C. E. FILE

Stearns-Roger

FINAL MAR 3 1981

3.2.2-23

C21700 SEP 22 '80

F2351 SR No. File No. 022

[redacted] SUBMIT FOR REVIEW
☐ SEE LETTER OF TRANSMITTAL
ENG. DEPT. BY [redacted] DATE OCT 14 1980
NEITHER REVIEW, COMMENT, NOR REVISION RELIEVES MANUFACTURER OR CONTRACTOR FROM RESPONSIBILITY FOR COMPLIANCE WITH SPECIFICATIONS OR WITH ALL OTHER CONTRACT REQUIREMENTS.
RETURN TO
Stearns-Roger
INCORPORATED
ON OR BEFORE

Optional Accessories

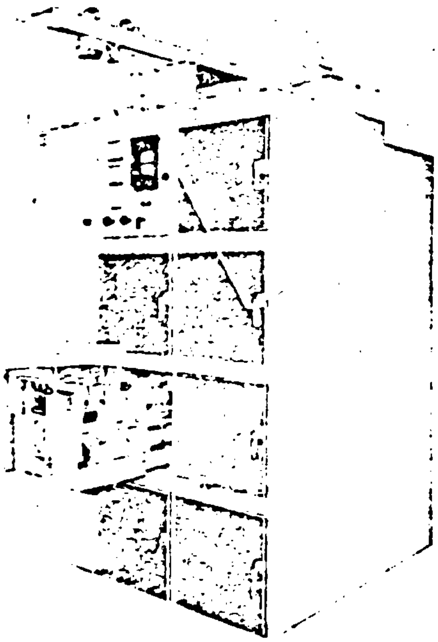

- Traveling type circuit breaker lifter, rail mounted on top of switchgear.
- Floor running portable circuit breaker transfer truck with manual lifting mechanism. Requires approximate 60" deep front aisle space.
- Test cabinet for electrically operated breakers, with pushbuttons, control cable and receptacle, for separate mounting.

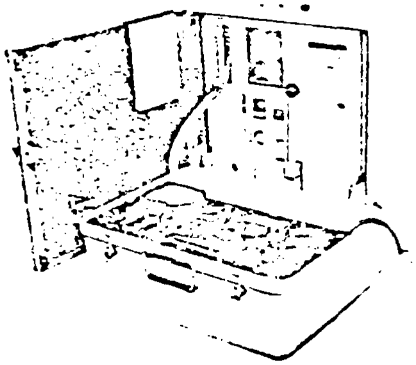

- Portable test kit for testing and calibration of Amptector trip devices. Utilizes standard 120 volt, 20 ampere single phase 60 Hz supply, available from any outlet.

Outdoor Type DSO Switchgear

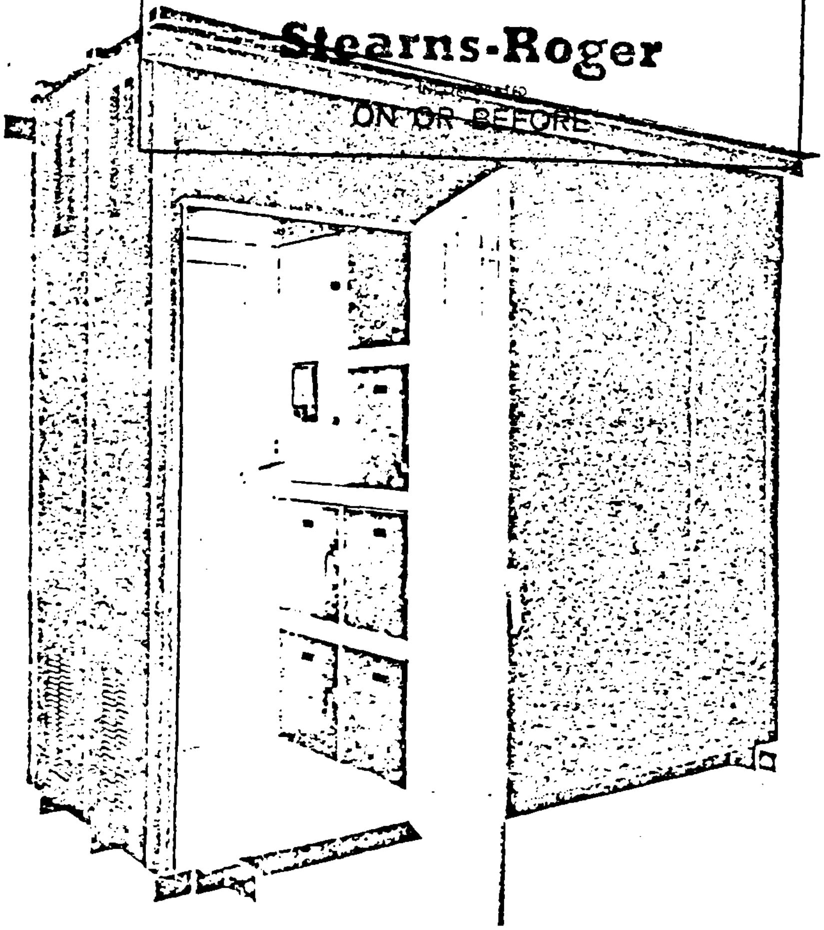

Type DSO outdoor switchgear consists of standard Type DS indoor structures assembled in a heavy gauge completely weatherproof enclosure, with a generous internal "walk-in" front operating aisle extending through all units of the assembly. A reinforced access door with holder, provision for padlocking and "panic" hardware is provided at each end of the aisle.

Standard features also include:

- Bolted hinged rear doors for access to cable and bus compartments.
- Labyrinth door openings.
- Filtered ventilation openings.
- Traveling type geared breaker lifter.
- Space heaters.
- Lighting outlets and convenience receptacles.
- Rigid base structure: no channels required.
- Walk-in aisle within shipping group shipped completely assembled.

The interior finish is similar to indoor switchgear. The standard exterior finish is ANSI No. 24 dark blue-gray. An asphalt coating is provided on the underside and base.

FINAL MAR 3 1981

Metal Enclosed Bus Runs

For connecting outdoor transformers through building walls to indoor switchgear, low voltage metal enclosed buses in ratings from 600 amperes to 5000 amperes are available. These buses can also be used for bus tie circuits between separate low voltage switchgear assemblies.

Design and construction follow Low Voltage Switchgear Standards, with bare aluminum or copper conductors with silver plated bolted joints and glass polyester supports. Momentary ratings (minimum 50,000 amperes) are as required. Standard finish colors are ANSI No. 61 pearl gray indoor and No. 24 dark blue-gray outdoor.

Stearns-Roger
C21700 SEP 22 '80
C. E. FILE
SR No F2351 No 023

[redacted]

[redacted]

OR CONTRACTOR FROM RESPONSIBILITY FOR COMPLIANCE WITH SPECS REQUIREMENTS.

RETURN TO
Stearns-Roger
INCORPORATED
ON OR BEFORE

TYPE DS LOW VOLTAGE POWER CIRCUIT BREAKERS

Ratings and Characteristics

Breaker Type	DS-206	DS-206S	DS-416	DS-416S	DS-420	DS-632	DS-840
Voltage Rating (AC only)	600	600	600	600	600	600	600
Frame Size (Max. Continuous Amp)	800	800	1600	1600	2000	3200	4000

Interrupting Ratings, RMS Symm. Amperes at System Voltages:

		DS-206	DS-206S	DS-416	DS-416S	DS-420	DS-632	DS-840
A. With	0-240V	42,000	50,000	65,000	65,000	65,000	85,000	130,000
Instantaneous	241-480V	30,000	42,000 ✓	50,000 ✓	65,000	65,000	65,000	85,000
Trip	481-600V	22,000	42,000	42,000	50,000	50,000	65,000	85,000
B. With	0-240V	30,000	42,000	50,000	65,000	65,000	65,000	85,000
Short Delay	241-480V	30,000	42,000 ✓	50,000 ✓	65,000	65,000	65,000	85,000
Trip	481-600V	22,000	42,000	42,000	50,000	50,000	65,000	85,000

Operating Characteristics-Same for All Types

Control Voltage	24 DC (1)	48 DC	125 DC ✓	250 DC (2)	115 AC	230 AC
Close Current (SR), Amp.	NA	5.0	2.0	1.0	3.0	1.5
Shunt Trip Current, Amp.	6.0	5.0	2.0	1.0	2.0	1.0
Spring Charge Motor, Amp. (3)	NA	7.5	3.0	1.5	3.0	1.5
Close Voltage Range		40-50	90-130	180-260	95-125	190-250
Trip Voltage Range	14-30	28-60	70-140	14--280	95-125	190-250

(1) Not a recommended voltage.
(2) Check Westinghouse for application at this control voltage.
(3) Running current; inrush approximately 400%.

Spring Charge Time - 5 seconds maximum
Time for Spring to Close Breaker, until contacts touch - 4.5 cycles maximum
Opening Time with Shunt Trip - 5 cycles maximum

Interrupting Time, at 200% or more of Inst. Pickup - 3 cycles maximum (4)
Interrupting Time, 100% to 200% of Inst. Pickup - 4 cycles maximum (4)
Arcing Time, Below 50% of Continuous Rating - 6 cycles maximum (4)

(4) Add approximately 2 cycles per shunt trip and approximately 4 cycles for instantaneous undervoltage.

FINAL MAR 3 198[illegible]

C. E. FILE

Stearns-Roger
[illegible] C21700 SEP 22 '80
SR No F235-1 File No 1024

Westinghouse Electric Corporation
Switchgear Division
East Pittsburgh, PA 15112

Descriptive Bulletin
36-553

Page 1

(3-1)

Comments:
SR FILE # 033, 034, 035, 036 #
BUL 36. 553 ENCOSURE SIZE IS SHOWN #
DIFFERENT FROM SIZE SHOWN ON DWG 5049-1-1

November, 1977
Supersedes Descriptive Bulletin 36-553
dated January, 1972 and 36-553A D WE A,
dated September, 1975
Mailed to: E, D, C.1968.DB

Indoor frame mounted 2.4 kV to 34.5 kV.

Indoor and outdoor enclosed non-fused 2.4 kV to 15 kV.

Indoor and outdoor enclosed fused 2.4 kV to 15 kV.

Type AWP Load Interrupter Switch

(REF) SR FILE # 025 THRU # 036

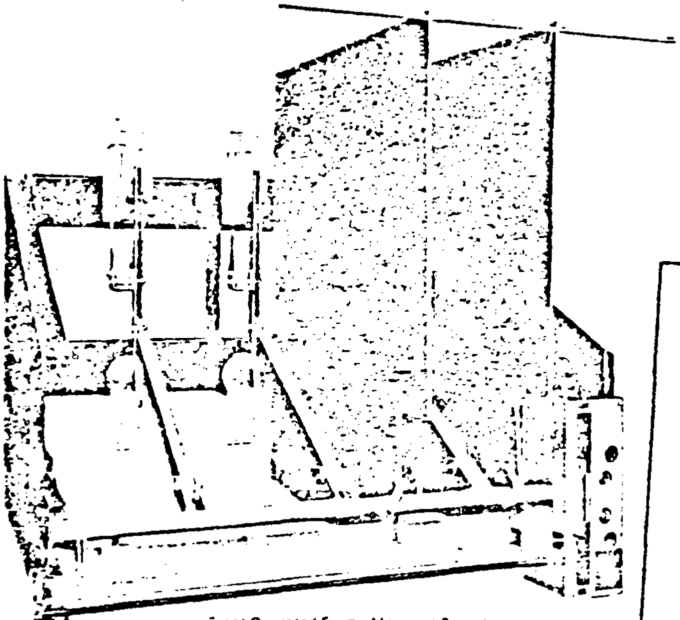

Front Operated Frame Mounted Switch

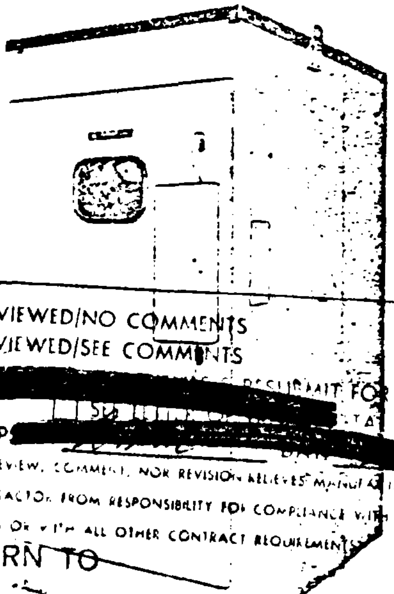

Front Operated Enclosed, Fused Switch

☐ REVIEWED/NO COMMENTS
☐ REVIEWED/SEE COMMENTS
[redacted] RESUBMIT FOR REVIEW
ENG. DEP 1980
NEITHER REVIEW, COMMENT, NOR REVISION RELIEVES MANUFACTURER OR CONTRACTOR FROM RESPONSIBILITY FOR COMPLIANCE WITH SPECIFICATIONS OR WITH ALL OTHER CONTRACT REQUIREMENTS
RETURN TO
Stearns-Roger
INCORPORATED
ON OR BEFORE

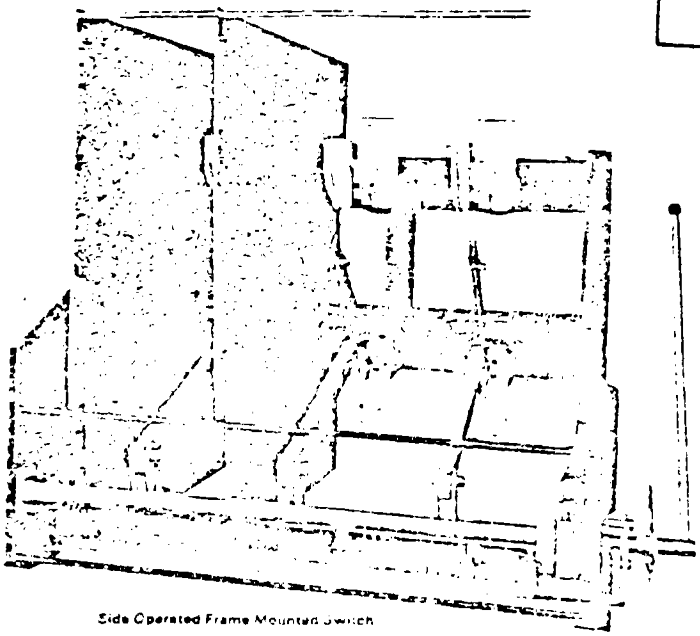

Side Operated Frame Mounted Switch

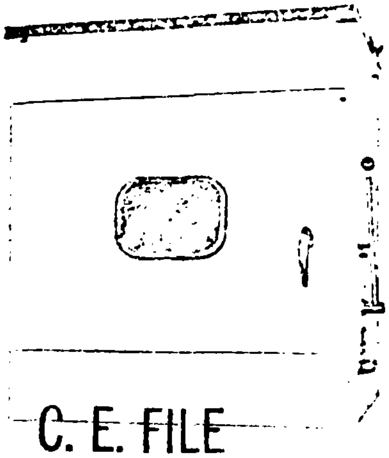

Side Operated Enclosed Wall Mounted Switch

C. E. FILE
Stearns-Roger

FINAL MAR 3 1981

C21700 SEP 22 '80

3.2.2-26

SR No F235-1 File No 025

Description

The AWP load interrupter switch, frame mounted, is a full rated quick make-quick break spring stored energy operated switch which provides, fast and reliable protection for high voltage circuits 2.4 kV through 34.5 kV.

Application

AWP interrupter switches are available in unitized three pole, frame mounted construction for mounting in enclosures or assemblies. These units can be applied separately or in conjunction with fuses. They provide non-automatic switching for sectionalizing primary feeders, and isolation for transformer banks, capacitors, voltage regulators and similar applications. When used in series with expulsion or current limiting fuses, the combination provides a higher interrupting rating against faults, within the capability of the fuse rating.

✓

Front Operated

The front operated type AWP switch is available in open frame mounted design from 5 kV through 34.5 kV, and is available in both right or left hand operation. In this design the operating handle is removable and is intended to be stored within the access door of its enclosure.

Side Operated

This switch design is available in open frame mounting from 5 kV through 34.5 kV, and is available in both right or left hand operation. The operating handle is fixed and requires no storage facility. On side operated units operating handles are available for either (1) hand operation or (2) hookstick operation. Fig. 23.

Frame mounted AWP switches, 5kV to 15 kV, can be supplied with a 600 or 1200 ampere continuous current and load break feature. At 23.0 and 34.5 kV the continuous current rating can be 1200 amperes, but only with a 600 ampere load break feature.

Fault close of 20 000, 40 000 and 61 000 amperes is available in the voltage range from 5 kV to 23.0 kV, and only 20 000 and 30 000 amperes at 34.5 kV.

The open frame mounted AWP switches are designed for indoor applications and must be mounted in a suitable metal enclosure of adequate strength to withstand the short circuit forces.

Refer to Component Sales East Pittsburgh for frame mounted motor operated AWP switches.

Ratings

Max. Volt	Nom. Volt	BIL kV.	Continuous Amps	Interrupting Current	Momentary		Fault Close ① kA
					10 Hz. Asym. kA	4 SEC. Sym. kA	
Table A: 5 kV							
5.0	4 8	60	600	600	40	25	20
5 0	4 8	60	600	600	40	25	40
5 0	4 8	60	1200	600	80	38	61
5 0	4 8	60	1200	1200	80	38	61
Table B: 8.25 kV							
8 25	7 2	75	600	600	40	25	20
8 25	7 2	75	600	600	40	25	40
8 25	7 2	75	1200	500	80	38	61
8 25	7 2	75	1200	1200	80	38	61
Table C. 15 kV							
15 0	13 2	95	600	600	40	25	20
15 0	13 2	95	600	600	40	25	40
15 0	13 2	95	1200	600	80	38	40
15 0	13 2	95	1200	600	80	38	51
15.0	13 2	95	1200	1200	80	38	40
15 0	13 2	95	1200	1200	80	38	61
Table D 25 8 kV							
25 8	23 0	150	600	600	40	25	20
25 8	23 0	150	600	600	40	25	40
25 8	23 0	150	1200	600	40	25	40
25 8	23 0	150	1200	600	61	38	61
Table E. 38 kV							
38 0	34 5	150	600	600	40	25	20
38 0	34 5	150	400	600	40	25	30
38 0	34 5	150	1200	600	40	25	30
38 0	34 5	150	1200	600	61	38	30

① All fault closing tests are done at maximum voltage rating and without any protective fusing

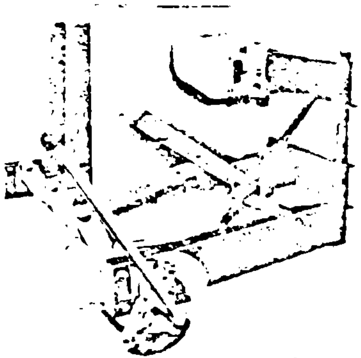

Special side operated AWP switches are specifically designed for mounting within 30 inch mine rectifiers but can be applied where limited space is required

☐ REVIEWED/NO COMMENTS
☐ REVIEWED/SEE COMMENTS
[redacted] REVIEW
☐ SEE LETTER OF TRANSMITTAL
ENG. DEP [redacted] OCT 14 1980
NEITHER REVIEW NOR ACCEPTANCE NOR REVISION RELIEVES MANUFACTURER OR CONTRACTOR FROM RESPONSIBILITY FOR COMPLIANCE WITH SPECIFICATIONS OR WITH ALL OTHER CONTRACT REQUIREMENTS.
RETURN TO
Stearns-Roger
INCORPORATED
ON OR BEFORE

C. E. FILE

FINAL MAR 3 198[illegible]

Stearns-Roger
C21700 SEP 22 '80
SR No F 2351 File No 024

Design Features

Stored energy mechanism:
The AWP quick make-quick break stored energy mechanism provides constant high-speed opening and closing and is capable of closing and holding on its rated fault current. The speed and force of opening and closing the contacts are both independent of the handle operation stroke.

The energy for the operation of the switch is provided by a spring that is compressed and released through a mechanical linkage.

Operation
Closing the front operated switch is accomplished by inserting the handle into the handle casting, Figure 1. An upward motion of the handle starts the rotation of the handle casting assembly. Through a mechanical linkage this operates a spring lever, Figure 2, 3 and 4, which compresses the spring. When the spring lever reaches the over toggle position, the spring releases its energy and closes the main contacts.

The opening cycle is initiated by a downward motion of the handle with the mechanical sequence repeated.

In the case of the side operated switch the handle is "fixed" and travels vertically in an arc of 120 degrees, approximately 60 degrees on each side of the operating shaft center line.

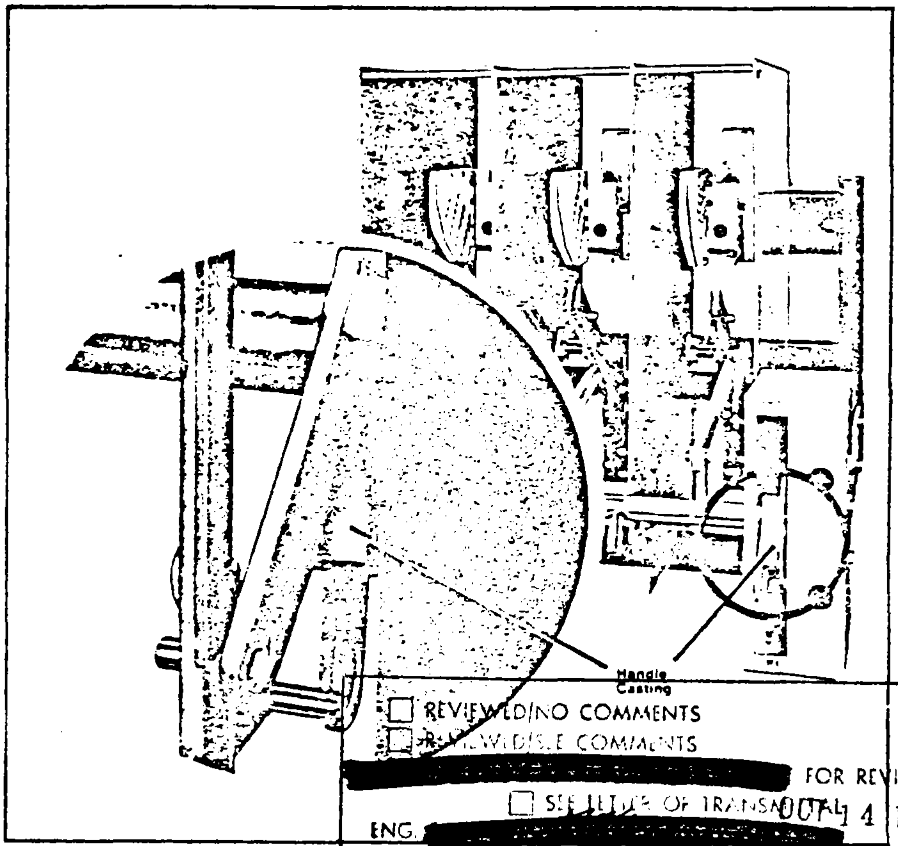

Figure 1

☐ REVIEWED/NO COMMENTS
☐ REVIEWED/SEE COMMENTS
[redacted] FOR REVIEW
☐ SEE LETTER OF TRANSMITTAL
OCT 14 1980
ENG. [redacted]
NEITHER REVIEW, COMMENT NOR REVISION RELIEVES MANUFACTURER OR CONTRACTOR FROM RESPONSIBILITY FOR COMPLIANCE WITH SPECIFICATIONS OR WITH ALL OTHER CONTRACT REQUIREMENTS.
RETURN TO
Stearns-Roger
INCORPORATED
ON OR BEFORE

FINAL MAR 3 198

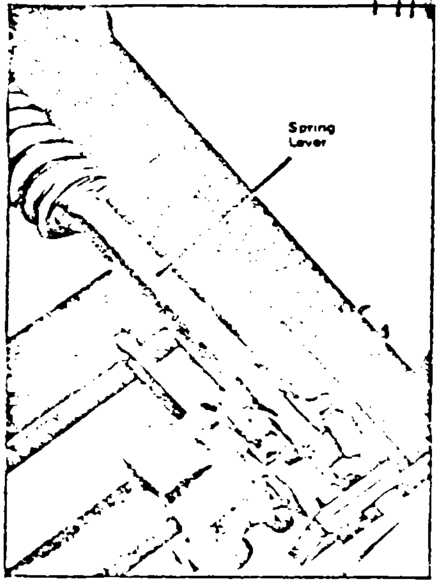

Figure 2

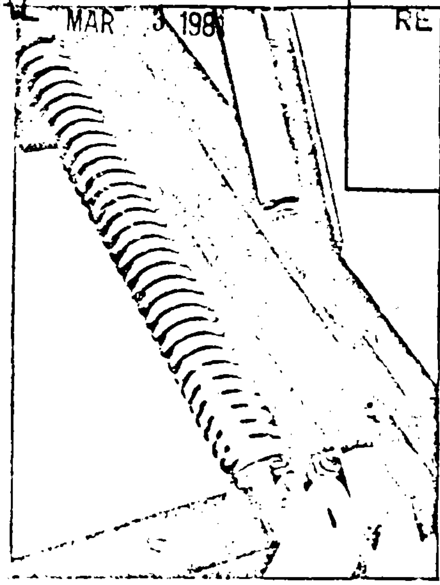

Figure 3

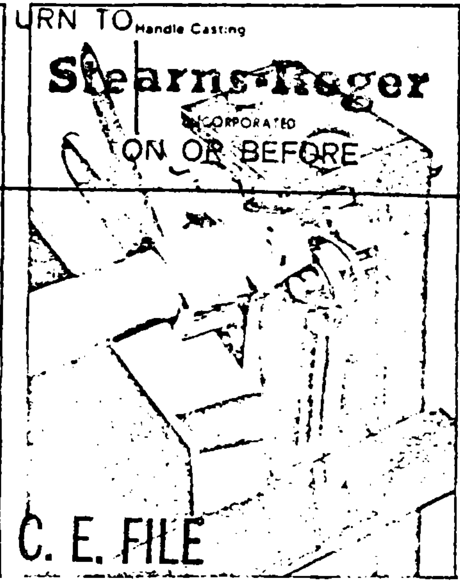

Figure 4

C. E. FILE

Stearns-Roger

C21700 SEP 22 '80

SR No F235-1 File No 027

☐ REVIEWED/NO COMMENTS
☐ REVIEWED/SEE COMMENTS
[redacted]IT FOR REVIEW
☐ SEE LETTER OF TRANSMITTAL
[redacted] OCT 14 1980
NEITHER REVIEW, COMMENT, NOR REVISION RELIEVES MANUFACTURER OR CONTRACTOR FROM RESPONSIBILITY FOR COMPLIANCE WITH SPECIFICATIONS OR WITH ALL OTHER CONTRACT REQUIREMENTS.
RETURN TO
Stearns-Roger
INCORPORATED
ON OR BEFORE

FINAL MAR 3 1981

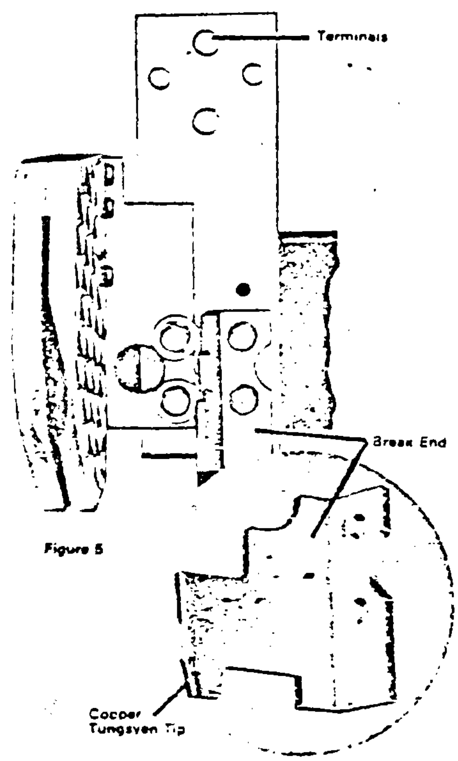

Figure 5

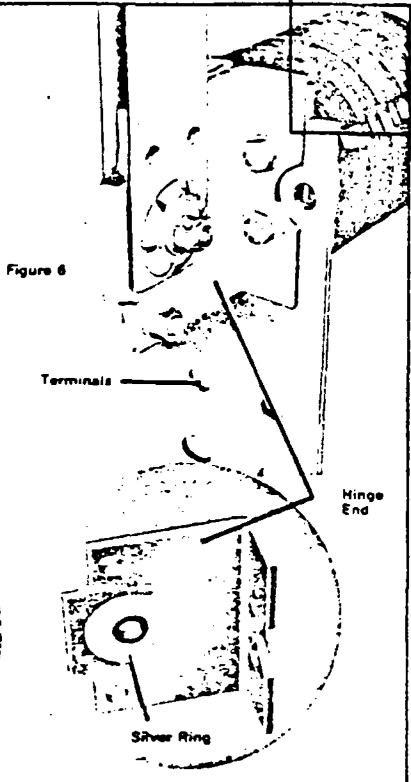

Figure 6

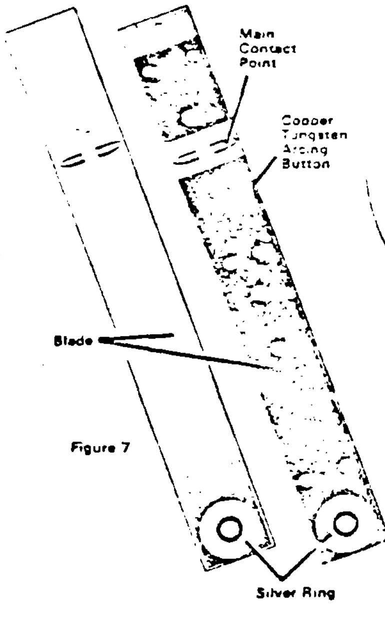

Figure 7

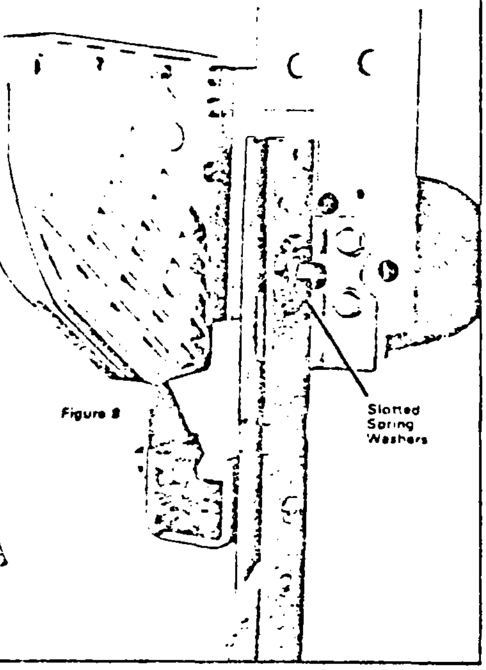

Figure 8

Design Features (Continued)

Main Contact
The main contacts, break and hinge end, are made of high conductivity hard drawn copper. For 40,000 and 61,000 ampere fault closing, the break end is provided with a copper tungsten alloy arcing tip. Figure 5.

The hinge end consists of two pieces of copper fastened together. Proper electrical contact is maintained when the blade is attached to the hinge contact with a bolt and spring washer. To further assure good electrical contact at 1200 amperes, the hinge end is also provided with silver rings at the moving point. Figure 6.

The blade consists of two high conductivity hard drawn copper bars in parallel. Figure 7. Since the electrical contact point for 600 amperes is silver to copper, the blades are provided with a silver ring at the hinge end and a copper embossed silver plated main contact point. On 40,000 and 61,000 ampere fault close ratings, copper tungsten alloy arcing buttons are provided to prevent damage to main break contact.

The two bars are fastened together to form the single blade at the hinge and break end. To assure permanent high contact pressure, self-adjusting slotted spring washers of phosphorus bronze are drawn tight over machined spacers. This provides flexibility in meeting stresses from distortion due to load or from uneven mounting. Figures 6 and 8.

Arc Chute
The arc chutes consist of two pieces of UREA formaldehyde fastened together to produce gas under high current conditions to extinguish the arc. Contacts within the arc chute restrain the flicker blade assembly until the spring is charged prior to opening. Figures 5 and 8.

Insulators
Glass polyester insulators are standard equipment on switches rated 5.0 kV and 15 kV. Porcelain insulators can be furnished as an optional feature. Porcelain insulators are standard on 7.2, 23.0 and 34.5 kV

C. E. FILE

Stearns-Roger
C21700 SEP 22 '80
SR No F 235-1 File No 028

Design Features (Continued)

Flicker Blade

The flicker blade is connected to the side and parallel to the main blade. It is constructed of hard drawn copper with an arc resisting silver tungsten alloy tip. Figure 9. In the opening sequence as the main blade separates from the main break contact, the current is transferred to the flicker blade which is being restrained by the high pressure contacts within the arc chute. Once the maximum angular movement between the flicker blade and main blade has been reached, the flicker blade starts to move out of the arc chute contacts. The additional pull of the torsional spring on the flicker blade assembly snaps the blade into an open position at high speed.

The heat of the arc releases a blast of deionizing gas from the arc chamber. This combination of the quick break and Deion action quickly extinguishes the arc de-energizing the ciruit.

For maintenance purposes or replacement, only the flicker blade portion need be removed.

Terminals

The terminal pads for both the 600 and 1200 ampere switches are high conductivity hard drawn copper bar with standard NEMA drilling. Figures 5, 6 and 9. For the mine application AWP switch the terminal pads are shortened to provide for insulated cable connections. (See page 2)

Blade Alignment

Blade and contact alignment for maintenance purposes can be checked with ease. The AWP Switch is supplied with slow close feature. Inserting the operating lever into the hub located on the shaft and using an upward motion, Figure 10, the switch blades can be readily moved for alignment check with main contacts. The switch cannot be fully latched with this slow close feature and once the lever is released the switch will always revert to the open position.

Barriers and Drive Rods

The barriers and drive rods are made of flame retardant glass polyester. The drive rods are also track resistant. Figure 11.

Standardization

The AWP was designed to be as flexible and simple as possible. Parts may be readily added or removed for changing applications.

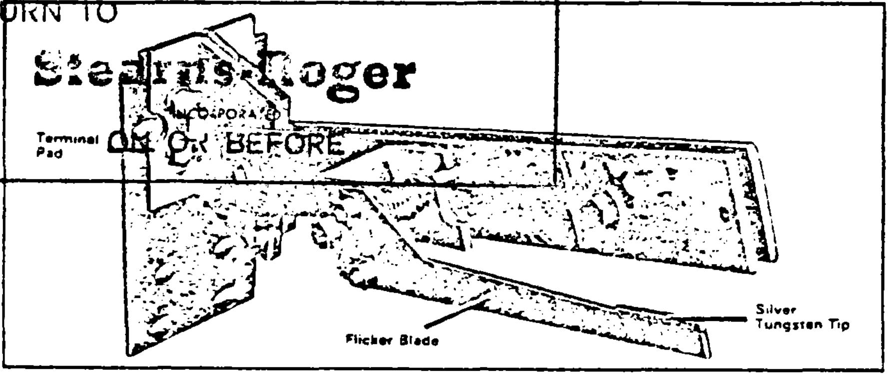

Figure 9

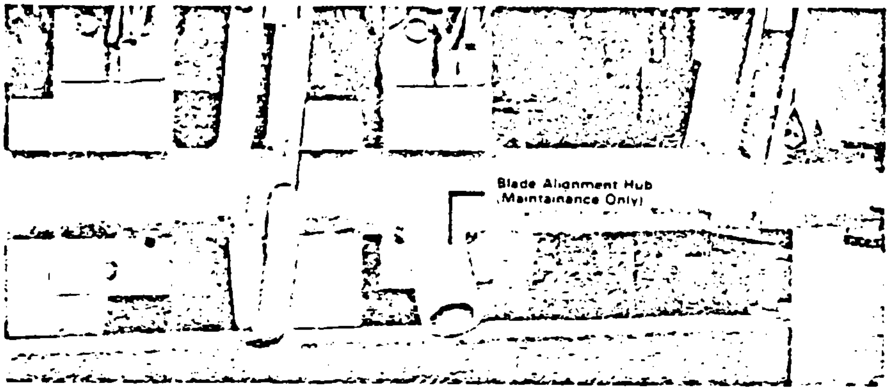

Figure 10

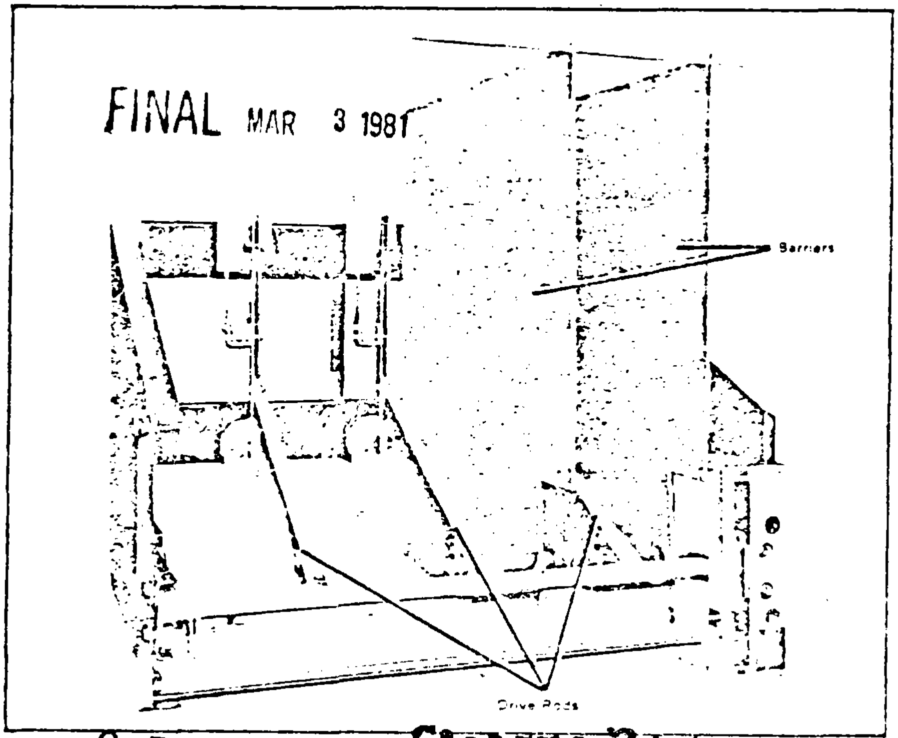

FINAL MAR 3 1981

Figure 11

C. E. FILE

Stearns-Roger

3.2.2-30

C21700 SEP 22 '80

F 235-1

SR No________ File No 029

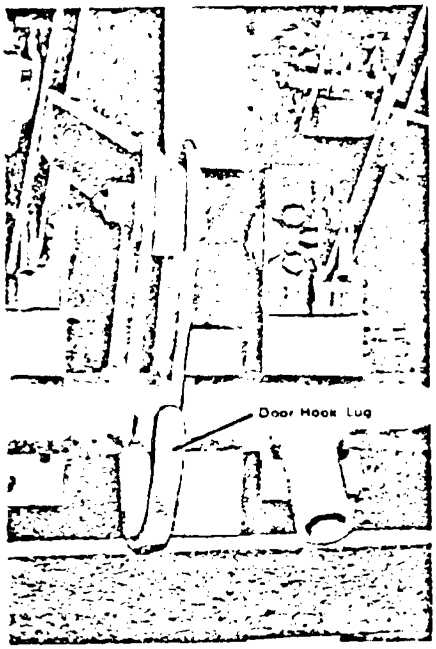

Figure 12

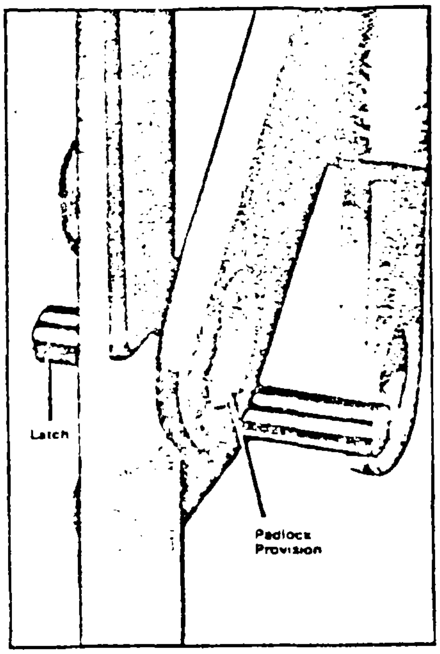

Figure 13

Door Interlocks and Special Features

Since the speed and force of closing the main contacts are independent of the lever closing operation, the AWP has an inherent built-in anti-tease mechanism. Each switch has two mechanical interlocks. The door interlock is a hook lug arrangement on the shaft which engages a ring mounted on the enclosure door, Figure 12. This prevents the door from being opened while the switch is in the closed position. The other interlock prevents the switch from being closed while the door is opened. The latch, Figure 13, must be pushed forward by a latch lug mounted on the enclosure door to close switch. For maintenance purposes only, this latch may be disengaged. Prior to such maintenance all sources of power to the switch must be de-energized.

To prevent contact with live parts through the mechanism cover plate, a barrier surrounds the operating mechanism, isolating it from the main current carrying parts of the switch, Figure 14.

In addition to the built-in interlocks, on front operated switches there are provisions for two kirk key interlocks, Figure 15, which will allow the switch to be locked in open or closed positions, plus provision for one padlock, Figure 13. Similar provisions are available on side operated switches when mounted in an enclosure.

When a key interlock(s) is required on front operated switches holes are provided (Figure 15) for lock mounting. Additional material is required to complete the lock installation. Refer to "Accessories" in price list.

Padlock provision, Figure 13 & 23, will accommodate one padlock. An adapter is available to accommodate additional padlocks if required.

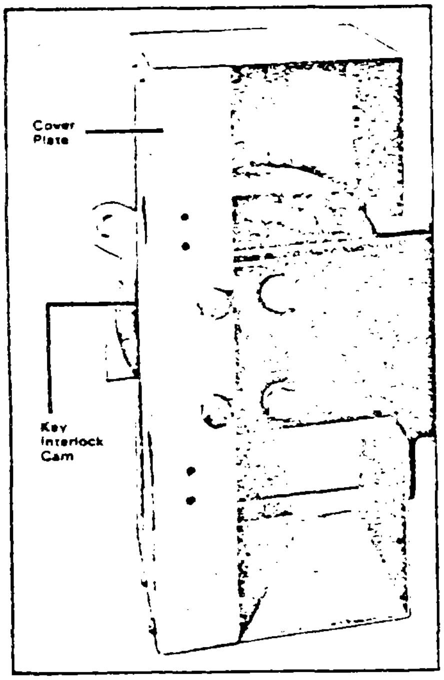

Figure 14

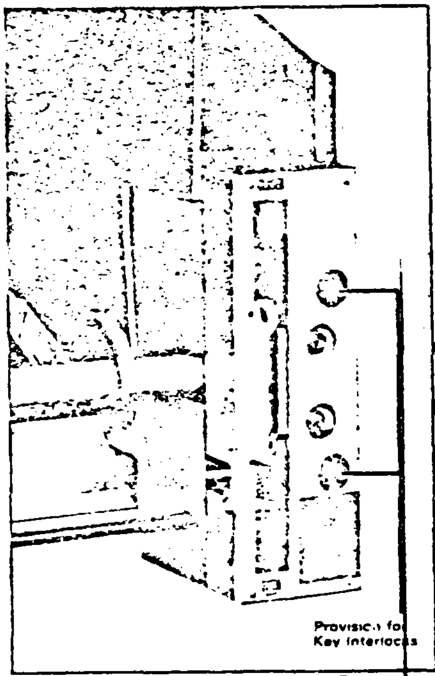

Figure 15

☐ REVIEWED/NO COMMENTS
☐ REVIEWED/SEE COMMENTS
[redacted] FOR REVIEW
☐ SEE LETTER OF TRANSMITTAL
ENG. DEPT. [redacted] 1980
NEITHER REVIEW, COMMENT, NOR REVISION RELIEVES MANUFACTURER OR CONTRACTOR FROM RESPONSIBILITY FOR COMPLIANCE WITH SPECIFICATIONS OR WITH ALL OTHER CONTRACT REQUIREMENTS.
RETURN TO
Stearns-Roger
INCORPORATED
ON OR BEFORE

FINAL MAR 3 1981

C. E. FILE

Stearns-Roger

[illegible] C21700 SEP 22 '80

SR No F235.1 File No 030

Operation of Electrical/Manual Stored Energy Mechanism

The electrical/manual stored energy mechanism portion of the AWP Switch is located on the right side of the switch just above the operating shaft and handle casting assembly. Figure 16.

The unit is a mechanical linkage consisting of a teeter bar, double toggle assembly and a shunt trip coil. Closing of this switch is accomplished by inserting the handle into the handle casting. An upward motion of the handle starts the rotation of the casting assembly. Through a mechanical linkage, this operates a spring lever which compresses the spring. When the spring lever reaches the over toggle position, the spring tends to release its energy and tries to move the operating shaft. The movement is restrained by a linkage which transfers the energy into the double toggle assembly.

The switch can now be closed by tripping the double toggle assembly using a manual release located in front of the switch or remotely by the shunt trip coil.

Once the switch is closed, the opening cycle is made ready by a downward motion of the handle. the double toggle assembly is reset after each open or close cycle allowing the mechanical sequence to repeat. Again the switch can now be opened manually or electrically. Shunt trip coil voltages can be 48 volts dc, 125 volts dc, 250 volts dc, 115 volts ac and 230 volts ac. Shunt trip attachment is available on 2.4 through 15 kV units only.

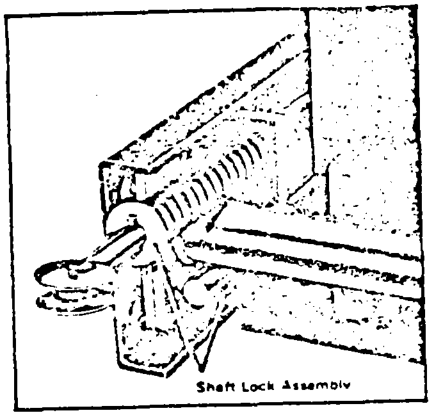

Figure 17

Special Features

Indicators located at the operating end are provided to show if the spring is charged or if the switch is opened or closed. Figure 19.

A shaft lock assembly is provided on the left side of the switch to prevent the switch from operating when the door is opened and the switch charged for operation. Figure 17. For maintenance purposes only, this latch may be disengaged. Prior to such maintenance all sources of power to the switch must be de-energized.

On this type of operating mechanism, Kirk Key Interlocks cannot be provided, however there is provision for padlocks on the handle casting. Figure 15.

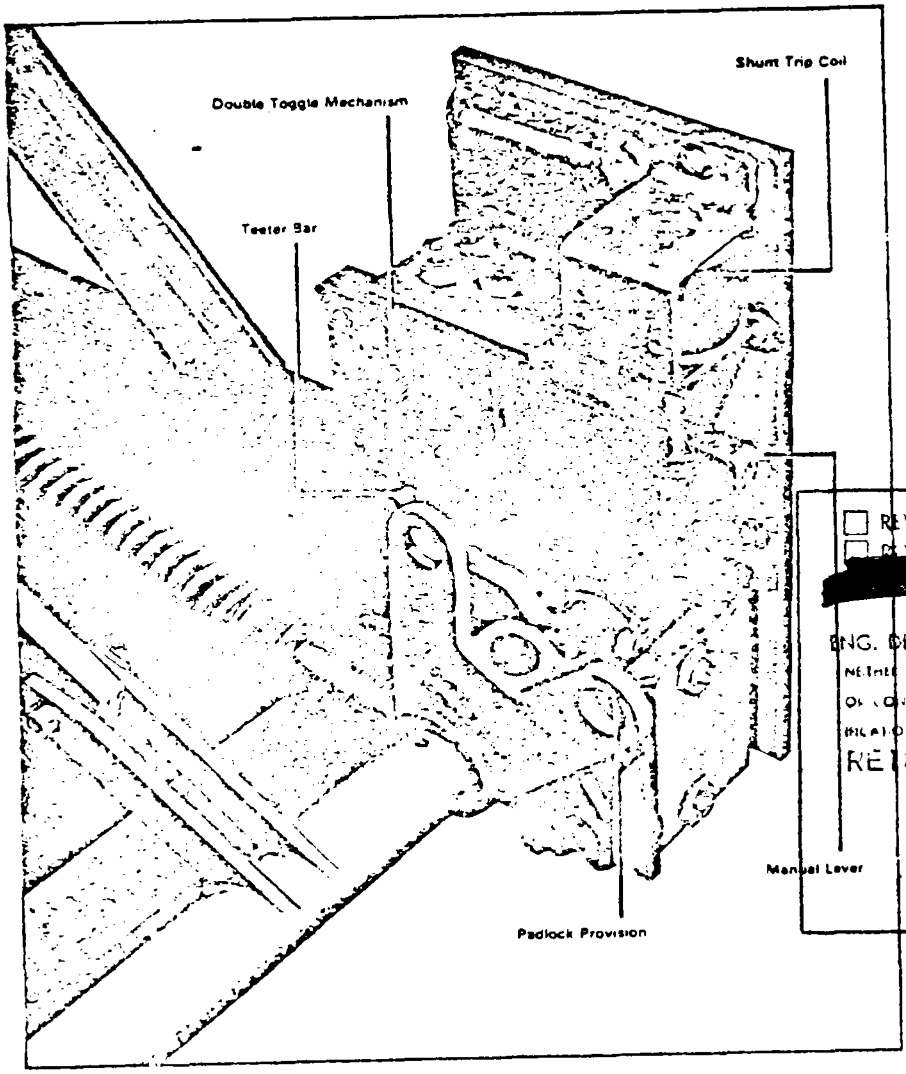

Figure 16

FINAL MAR 3 1981

☐ REVIEWED/NO COMMENTS
☐ [redacted] FOR REVIEW
☐ SEE LETTER OF TRANSMITTAL
ENG. DEPT. BY [redacted] 1980
NEITHER REVIEW, COMMENT, NOR REVISION RELIEVES MANUFACTURER OR CONTRACTOR FROM RESPONSIBILITY FOR COMPLIANCE WITH SPECIFICATIONS OR WITH ALL OTHER CONTRACT REQUIREMENTS.
RETURN TO
Stearns-Roger
INCORPORATED
ON OR BEFORE

C. E. FILE
Stearns-Roger

C21700 SEP 22 '80

SR No F235.1 File No 031

Access Door
An access door Fig. 18 to the switch operating mechanism can be provided for mounting on cabinet door. This door assembly can be used for either indoor or outdoor application. Drawing pertaining to cutout requirements for mounting may be found on page 5 of Technical Certification Section 36-573.

Test Data
- Tests were performed on 5.0 kV through 34.5 kV 600 and 1200 ampere switches in accordance with NEMA STD SG6, ANSI C37-32 and Canadian Standard C10S-1960. These certified tests are available upon request.

Pertinent data, such as interrupting capabilities, fault closing and momentary, are listed in Table on page 2. To further highlight the design features of the AWP, it is capable of interrupting magnetizing currents of transformer at low power factor and at 23.0 kV cable charging currents. This data is also available upon request.

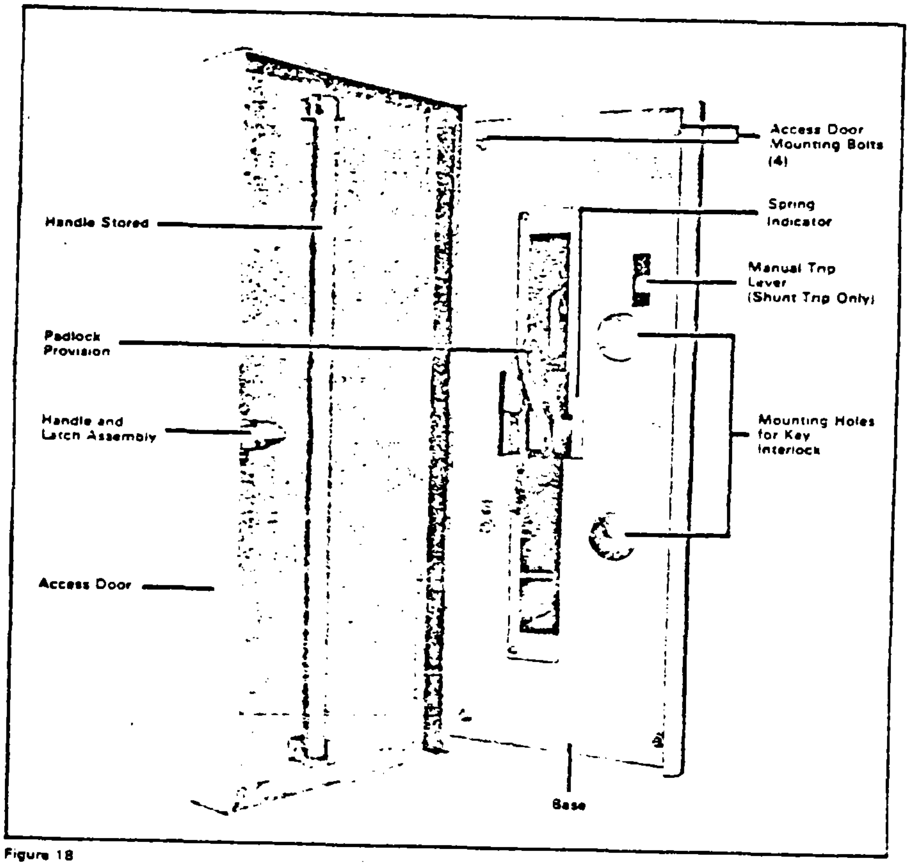

Figure 18

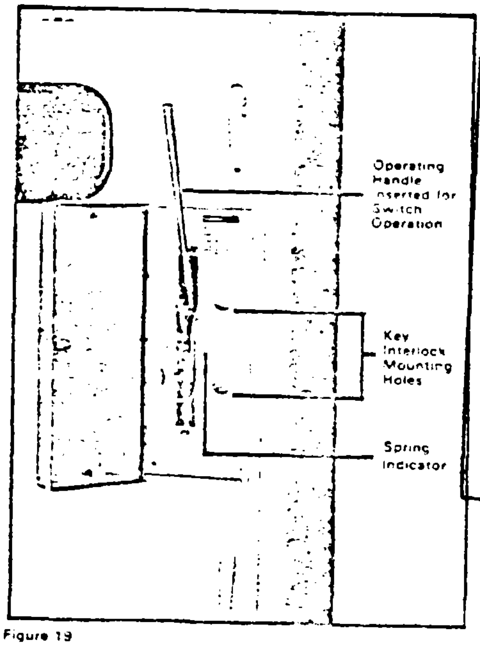

Figure 19

FINAL MAR 3 1981

Enclosures

Enclosures for the type AWP switch are available for side operated, wall mounted, unfused units, Figure 19A, as well as the fused units which can be side or front operated, 5 kV through 15 kV. These enclosures are made of 11 gauge steel and are of bolted construction, Figure 20. All steel used in the enclosure is cleaned and phosphatized in preparation for painting. The paint used in standard production is light gray ANSI-61 for indoor applications and ANSI-70 for outdoor applications.

Each enclosure door contains a window through which the switch unit can be observed. The window is tempered reinforced glass which meets all applicable standards and is free floating in a rubber molding. (See Figure 20) The door of each enclosure is mounted on three (3) hinges and latches at three (3) points with two (2) handles. Figure 21

Each enclosure door of the front operated unit is equipped with an access door through which the switch may be operated, Figure 20. Each enclosure door is equipped with a door interlock which prevents opening the enclosure door when the switch contacts are closed, Figure 21, and utilizes the open door interlock as described on page 6 under door interlock features.

All fuse mountings designed for use within the enclosed AWP switch are of the non-disconnect type.

Fuse units used in conjunction with these mountings can be either the PBA-200, 400, 800, CLE, CLE-1-2-3, CLT or CX, dependent upon the proper application.

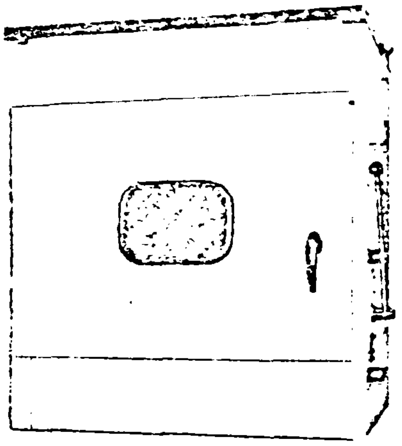

Figure 19A
Non-Fused Side Operated Enclosed Wall Mounted Switch

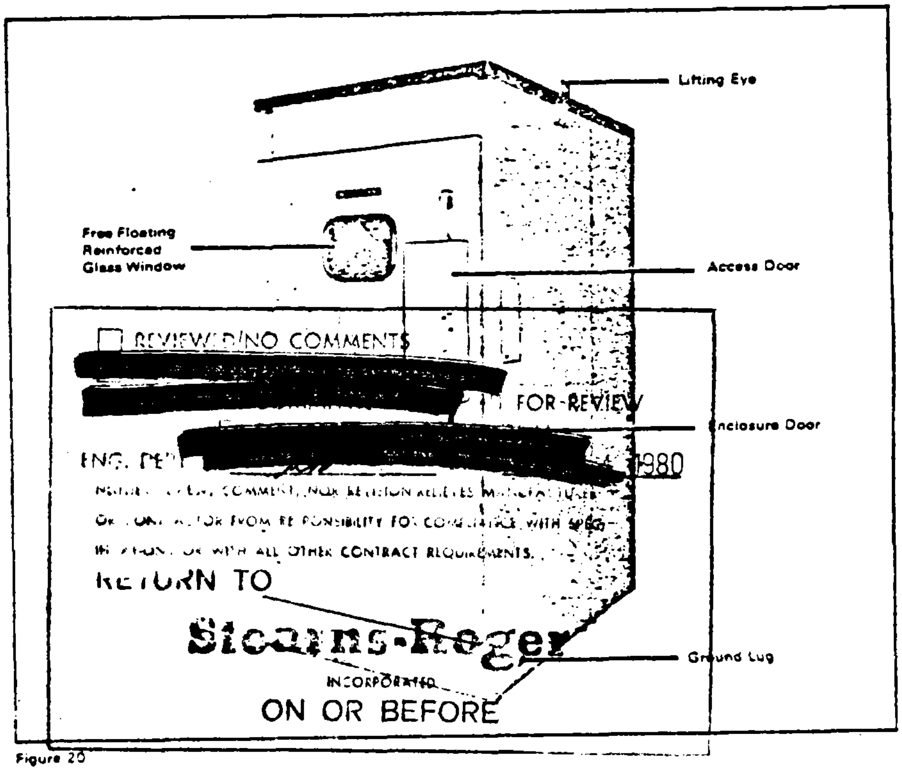

☐ REVIEWED/NO COMMENTS
[redacted]
FOR-REVIEW
ENG. DEPT [redacted] 1980
NEITHER REVIEW, COMMENT, NOR REJECTION RELIEVES MANUFACTURER OR CONTRACTOR FROM RESPONSIBILITY FOR COMPLIANCE WITH SPECIFICATIONS OR WITH ALL OTHER CONTRACT REQUIREMENTS.
RETURN TO
Stearns-Roger
INCORPORATED
ON OR BEFORE

Figure 20

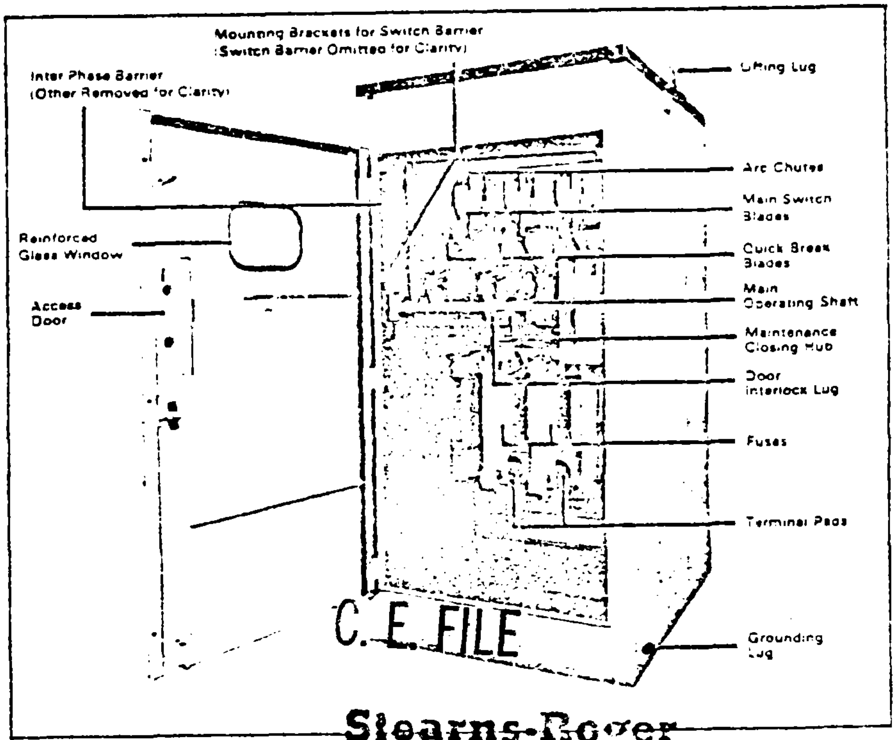

C. E. FILE

Stearns-Roger

Figure 21

C21700 SEP 22 '80

3.2.2-34

SR No F 235.1 File No 033

All enclosures which incorporate fuses have in their design a hinged shield over the switch compartment to prevent contact with the live parts while working in the fuse compartment, Figure 22.

Standard enclosures provide for cable entrance in the top and out the bottom. Conduit locations are identified for drilling purposes. When the requirement arises to have the cables in and out either the top or the bottom a module is added to the back of the switch, Figure 24, to provide space for rear connections. When the rear compartment is added, the rear panel of the standard enclosure is omitted to provide access to the rear compartment. These two compartments are shipped bolted together and may be separated, if desired for ease of installation of cable, Figure 24. Each compartment is equipped with lifting lugs bolted into place and which may be removed after installation.

AWP Switches 5.0 kV to 15.0 kV can be obtained in weatherproof and dust tight enclosures. The standard outdoor enclosure is supplied with a conduit adapter but roof bushings are available. Other equipment which can be mounted in the enclosure includes auxiliary switches and potheads. All enclosures are furnished with grounding lugs, Figure 21.

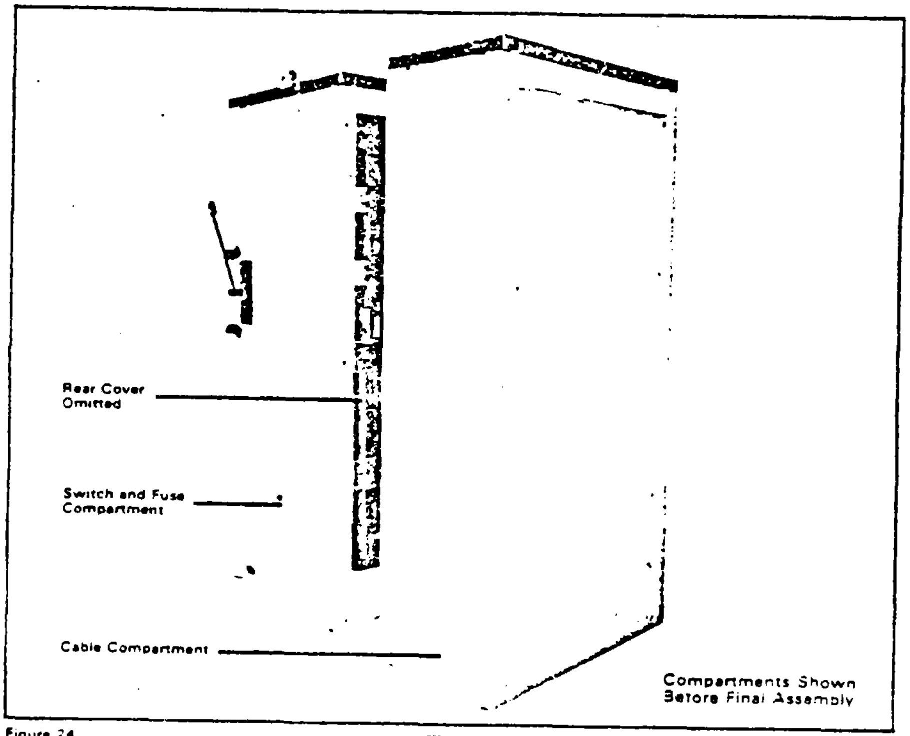

Figure 24

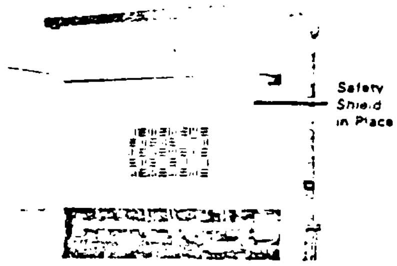

Figure 22

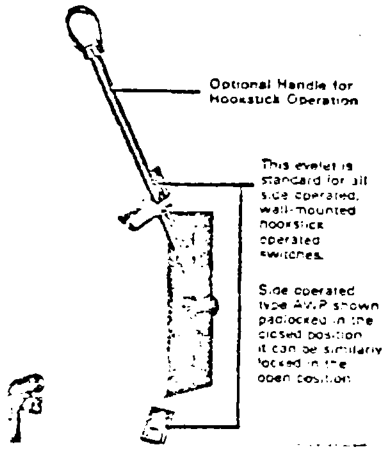

Figure 23

FINAL MAR 3 1981

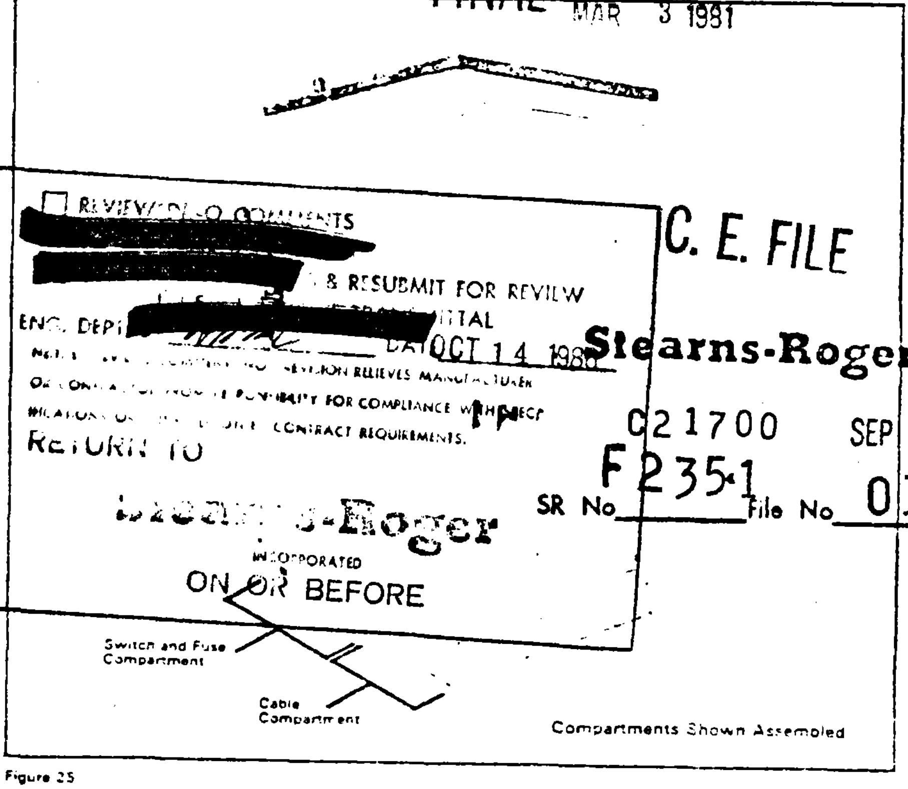

Figure 25

☐ REVIEWED-NO COMMENTS
[redacted]
& RESUBMIT FOR REVIEW
ENG. DEPT [redacted] ITTAL
DATE OCT 14 1980
NOTE [illegible] REVISION RELIEVES MANUFACTURER OR CONTRACTOR FROM RESPONSIBILITY FOR COMPLIANCE WITH SPECIFICATIONS OR [illegible] CONTRACT REQUIREMENTS.
RETURN TO
Stearns-Roger
INCORPORATED
ON OR BEFORE

C. E. FILE
Stearns-Roger
C21700 SEP 22 '80
SR No F2351 File No 034

Descriptive Bulletin
36-553

☐ ... NO COMMENTS
☐ ... REVIEWABLE COMMENTS
[redacted] ...MIT FOR REVIEW page 1
[redacted] ...MITTAL
[redacted] ~~1-4-1980~~
...REVIEW, COMMENT, NOR REVISION RELIEVES MANUFACTURER
OR CONTRACTOR FROM RESPONSIBILITY FOR COMPLIANCE WITH SPECS
... OTHER CONTRACT DOCUMENTS
~~Kerb RW 10~~

INCORPORATED
~~ON OR BEFORE~~

Outline Dimensions 5-15 kV Enclosures

UNFUSED —
Side Operated Only

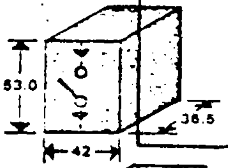

Figure 26
Cable In Top-Out Bottom

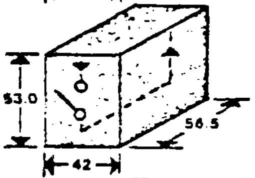

Figure 27
Cable in Top-Out Top

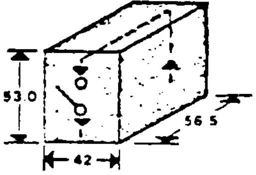

Figure 28
Cable In Bottom-Out Bottom

FUSED —
Side or Front Operated

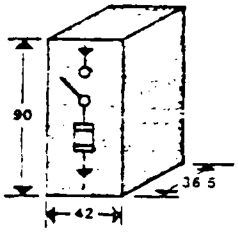

Figure 29
Cable In Top-Out Bottom

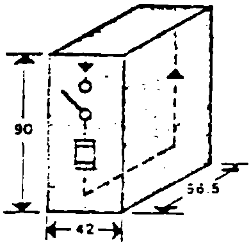

Figure 30
Cable In Top-Out Top

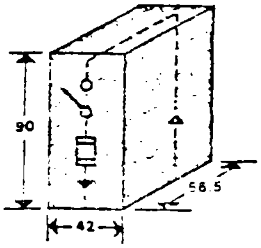

Figure 31
Cable In Bottom-Out Bottom

Front View

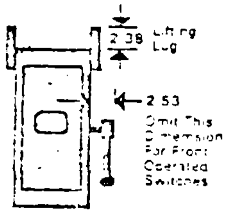

Figure 32

Indoor, Outdoor or Dust Proof Enclosure with Side Operated Mechanism

Figure 33 - Cable In Top - Out Bottom

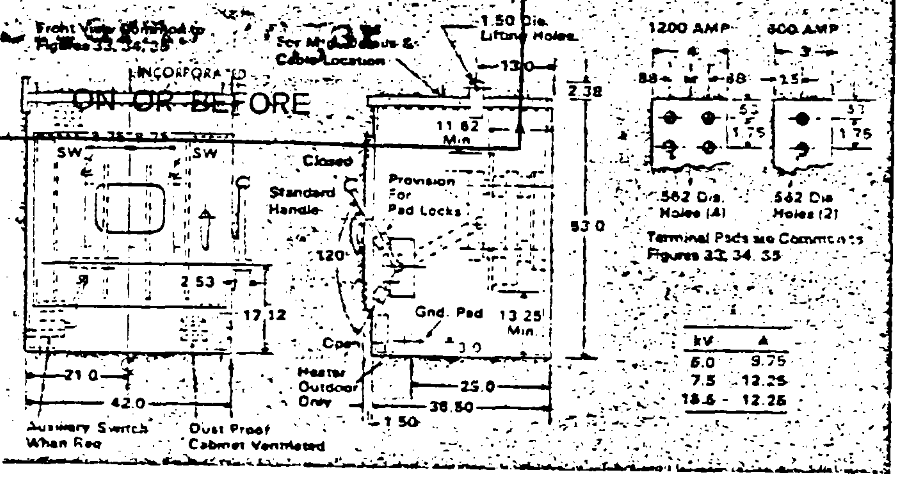

Terminal Pads are Common to Figures 33, 34, 35

kV	A
6.0	9.75
7.5	12.25
15.6	12.26

Figure 34 - Cable in Bottom—Out Bottom

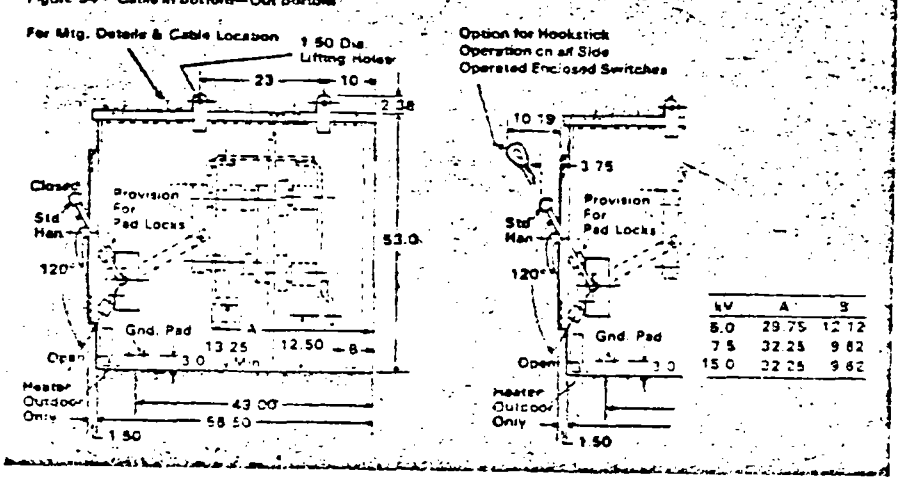

kV	A	B
5.0	29.75	12.12
7.5	32.25	9.62
15.0	32.25	9.62

Figure 35 - Cable in Top—Out Top

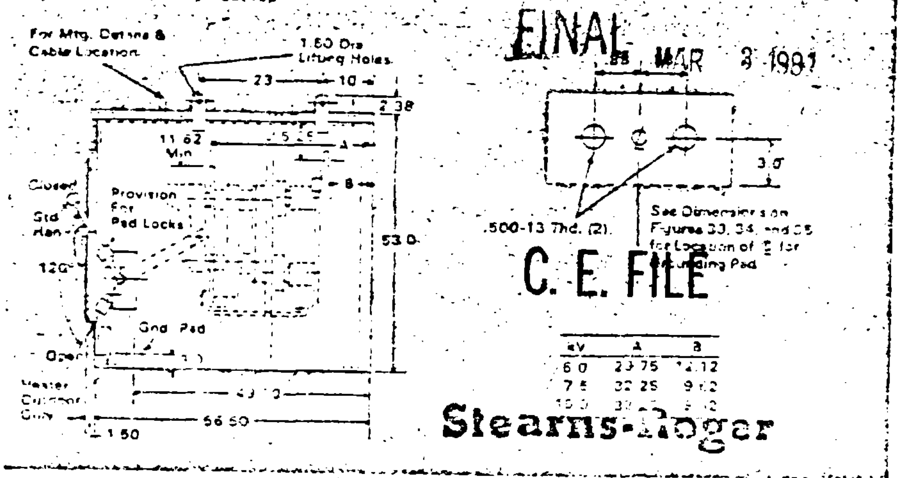

See Dimensions on Figures 33, 34, and 35 for Location of ℄ for Grounding Pad

kV	A	B
6.0	23.75	14.12
7.5	32.25	9.62
15.0	[illegible]	9.62

FINAL
MAR 3 1981

C. E. FILE

Stearns-Roger

C21700 SEP 22 '80

SR No F2351 File No 035

Mounting Hole, Conduit Hole and Cable Hole Locations

☐ REVIEWED/NO COMMENTS
☐ REVIEWED/SEE COMMENTS
[redacted] IT FOR REVIEW
[redacted] ITIAL
[redacted] DATE OCT 14 1980
NEITHER REVIEW, COMMENT, NOR REVISION [redacted] UBER
OR CONTRACTOR FROM RESPONSIBILITY FOR COMPLIANCE WITH SPEC
IFICATIONS OR ANY OF THE OTHER CONTRACT REQUIREMENTS.
RETURN TO
Stearns-Roger
INCORPORATED
ON OR BEFORE

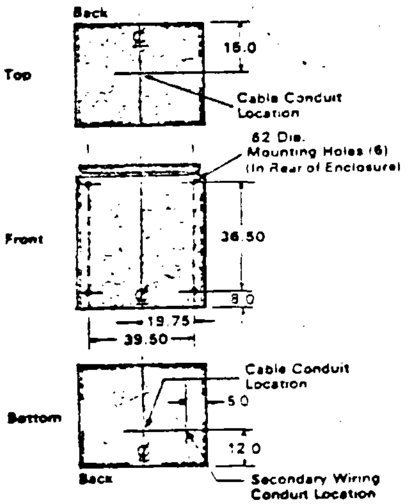

Figure 36
Wall Mounted - Unfused - Cable In Top - Out Bottom

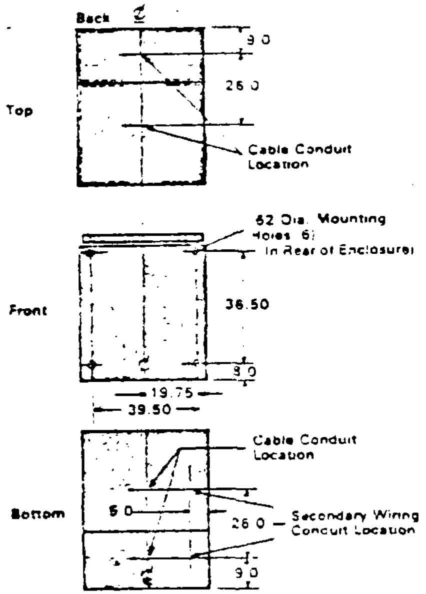

Figure 37
Wall Mounted - Unfused - With Rear Enclosure Cable In Top - Out Top or In Bottom - Out Bottom

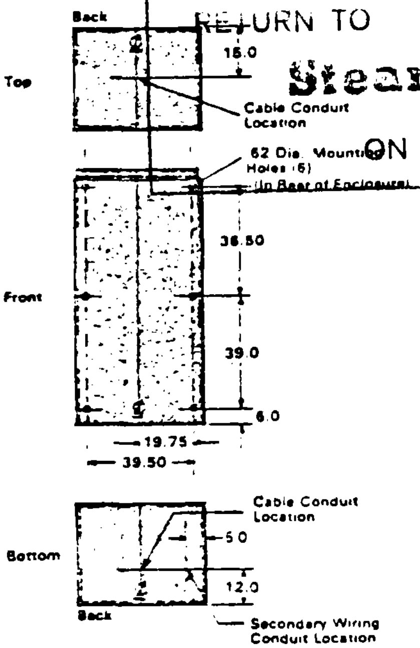

Figure 38
Wall Mounted - Fused - Without Rear Compartment Cable In Top - Out Bottom

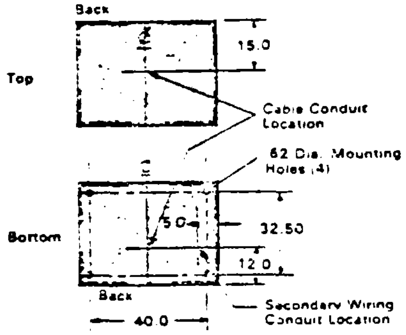

Figure 39
Floor Mounted - Fused - Without Rear Compartment Cable In Top - Out Bottom

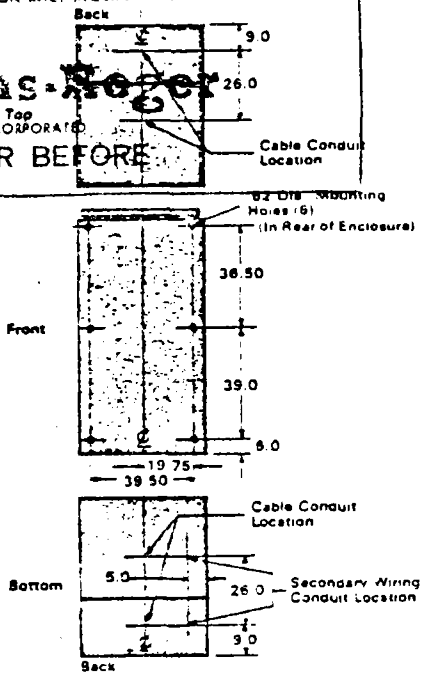

Figure 40
Wall Mounted - Fused - With Rear Compartment Cable In and Out Top or In and Out Bottom

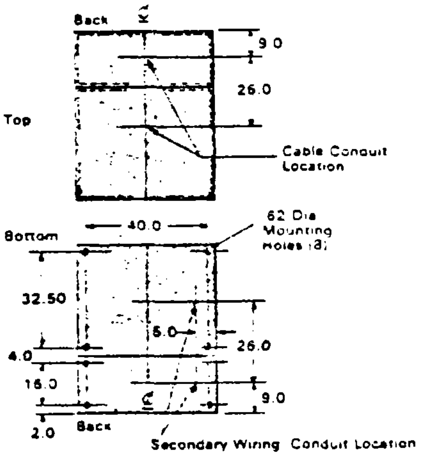

Figure 41
Floor Mounted - Fused - With Rear Compartment Cable In and Out Top or In and Out Bottom

C F F

FINAL MAR 3 1981

Further Information
Price List 36-523, 36-524
T.C.S. 36-573

Stearns-Roger

C21700 SEP 22 '80

SR No F235-1 File No 036

Westinghouse Electric Corporation
Switchgear Division
East Pittsburgh, PA 15112

Abbott

5-1

CURRENT TRANSFORMER
Model 350

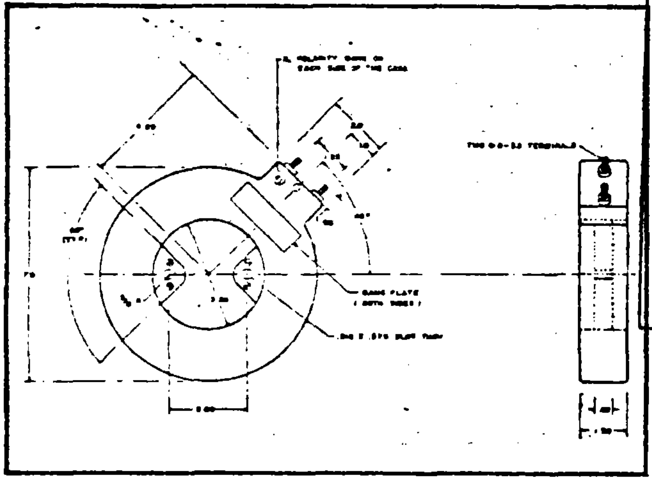

☐ REVIEWED NO COMMENTS
[redacted]
FOR REVIEW
☐ SEE LETTER OF TRANSMITTAL
ENG. DE[redacted]
~~OCT 14 1980~~
NEITHER REVIEW, COMMENT, NOR REVISION RELIEVES MANUFACTURER OR CONTRACTOR FROM RESPONSIBILITY FOR COMPLIANCE WITH SPECIFICATIONS OR WITH ALL OTHER CONTRACT REQUIREMENTS.
RETURN TO
Stearns-Roger
INCORPORATED
ON OR BEFORE

FINAL MAR 3 1981

C. E. FILE

- **CASE:** Molded Reinforced Plastic.
- **APPLICATION:** Metering. Designed to fit over bus be[illegible] Westinghouse DS breaker.
- **INSULATION CLASS:** 600 Volts
- **FREQUENCY:** 25-60 Hz
- **IMPULSE LEVEL:** 10 KV
- **CONTINUOUS THERMAL CURRENT RATING FACTOR:** 1.33 @ 30°C Ambient:1.0 at 55°C Amb.

Stearns-Roger
C21700 SEP 22
SR No F235-1 File No 037

OK

CAT. NO.	CURRENT RATING (amperes)	ANSI ACCURACY CLASSIFICATION — 60 Hz		CAT. NO.	CURRENT RATING (amperes)	ANSI ACCURACY CLASSIFICATION — 60 Hz	
		B-0.1	B-0.2			B-0.1	B-0.2
350-101	100:5	1.2					
350-151	150:5	1.2		350-801	800:5	0.3	0.3
350-201	200:5	1.2	1.2	350-102	1000:5	0.3	0.3
350-301	300:5	0.6	0.6	350-122	1200:5	0.3	0.3
350-401	400:5	0.6	0.6	350-152	1500:5	0.3	0.3
350-501	500:5	0.6	0.6	350-162	1600:5	0.3	0.3
350-601	600:5	0.6	0.6	350-202	2000:5	0.3	0.3

Standard AWP Load Interrupter Switch (Front and Side Operated)

Indoor, 2.4 Kv Through 13.8 Kv

Maximum Design Voltage	Nominal Voltage	BIL KV	Continuous Amps	Interrupting Current	Momentary 10Hz. Asym. Ka	Momentary 4 Sec. Sym. Ka	Fault Close Ka	Porcelain Insulators Style Number	Porcelain Insulators FAMAD	Porcelain Insulators List Price	Glass Polyester Insulators Style Number	Glass Polyester Insulators FAMAD	Glass Polyester Insulators List Price
Right Hand Front-Operated ✓													
5.0	4.3	60	600	600	40	25	20	140D719G01	[illegible]		691D078G01	[illegible]	
5.0	4.3	60	600	600	40	25	40	140D719G04	31990		[illegible]	48003	
5.0	4.8	60	1200	600	30	38	61	140D720G01	31992		[illegible]	[illegible]	
5.0	4.3	60	1200	1200	30	38	61	140D721G01	42981		691D080G01	[illegible]	
Right Hand Side-Operated													
5.0	4.3	60	600	600	40	25	20	628F011G01	70093		668F556G01	70098	
5.0	4.3	60	600	600	40	25	40	628F011G04	70094		668F556G04	70099	
5.0	4.3	60	1200	600	30	38	61	628F012G01	70096		668F557G01	70105	
5.0	4.3	60	1200	1200	30	38	61	628F013G01	70097		668F558G01	70110	
Right Hand Front-Operated													
8.25	7.2	75	600	600	40	25	20	140D719G02	42982		NOT AVAILABLE		
8.25	7.2	75	600	600	40	25	40	140D719G05	42983				
3.25	7.2	75	1200	600	30	38	61	140D720G02	42984				
8.25	7.2	75	1200	1200	30	38	61	140D721G02	42985				
Right Hand Side-Operated													
8.25	7.2	75	600	600	40	25	20	628F011G02	70112		NOT AVAILABLE		
8.25	7.2	75	600	600	40	25	40	628F011G05	70116				
8.25	7.2	75	1200	600	30	38	61	628F012G02	[illegible]				
8.25	7.2	75	1200	1200	30	38	61	628F013G02	70120				
Right Hand Front-Operated													
15.0	13.2	95	600	600	40	25	20	140D719G03	40986		691D078G03	[illegible]	
15.0	13.2	95	600	600	40	25	40	140D719G06	31991		691D079G06	[illegible]	
15.0	13.2	95	1200	600	30	38	40	140D720G03	40987		691D079G03	[illegible]	
15.0	13.2	95	1200	600	30	38	61	140D720G04	31993		691D079G04	48394	
15.0	13.2	95	1200	1200	30	38	40	140D721G03	40988		691D080G03	[illegible]	
15.0	13.2	95	1200	1200	30	38	61	140D721G04	[illegible]		691D080G04	48401	
Right Hand Side-Operated													
15.0	13.2	95	600	600	40	25	20	628F011G03	70121		668F556G03	[illegible]	
15.0	13.2	95	600	600	40	25	40	628F011G06	70122		668F556G06	70140	
15.0	13.2	95	1200	600	30	38	40	628F012G03	70123		668F557G03	[illegible]	
15.0	13.2	95	1200	600	30	38	61	628F012G04	70124		668F557G04	[illegible]	
15.0	13.2	95	1200	1200	30	38	40	628F013G03	70125		668F558G03	[illegible]	
15.0	13.2	95	1200	1200	30	38	61	628F013G04	70135		668F558G04	70153	

Accessories For Front Operated Switches

		List Price
A	Shunt Trip Mechanism (Check East Pittsburgh for Availability)	$525
B	Auxiliary Switch	137
C	Operation Counter	130
D	Inverted Switch Operation	80
E	Provision for Kirk Key Interlock (Order Style 140D441G04)	20
F	Access Door Assembly	
	Standard Door (Order Style 140D884G01)	65
	Door with Handle Lock (Order Style 140D884G02)	85

All fault closing tests done at maximum voltage rating and without any protective fusing.
Stocked, order on W-33.
Not stocked, order on W-13.
Order by description on W3.
This price addition for the stored energy switch includes the special electrical manual stored energy mechanism with shunt trip and two auxiliary switches. See TDS 36-570 pages 2-3.
Suitable for lock type FNDE.
Switch provided with provisions for Kirk Key Lock Type B with [illegible] action.
Switch provided with hasps for pad locking handle.

FINAL

3

Prices Include:

Three pole, single throw, front connected group-operated AWP switch with pole units, barriers and manual operating mechanism on a common frame. Prices do not include terminal connectors. Terminal connectors can be ordered by referring to DB 34-350 and Price List 34-320.

Ordering Information

When ordering switch that is carried in W-33 stock, order by style number. Switches not carried in stock order on W-13 by Style Number – 6 to 8 weeks delivery.

Shipment

Obtain shipment quotation on all non-stock items from Switchgear Division, Component Sales, East Pittsburgh, Pa.

☐ REVIEWED/NO COMMENTS
☐ REVIEWED/COMMENTS
[redacted] FOR REVIEW
SUBMITTAL
OCT 14 1980
NEITHER REVIEW, COMMENT, NOR REVISION RELIEVES MANUFACTURER OR CONTRACTOR FROM RESPONSIBILITY FOR COMPLIANCE WITH SPECIFICATIONS OR WITH ALL OTHER CONTRACT REQUIREMENTS.
RETURN TO
Stearns-Roger
INCORPORATED
ON OR BEFORE

C.E. FILE
Stearns-Roger

C21700 SEP 22 '80

SR No F235-1 File No 038
01C

Abbott

7-1

POTENTIAL TRANSFORMER
Model 450

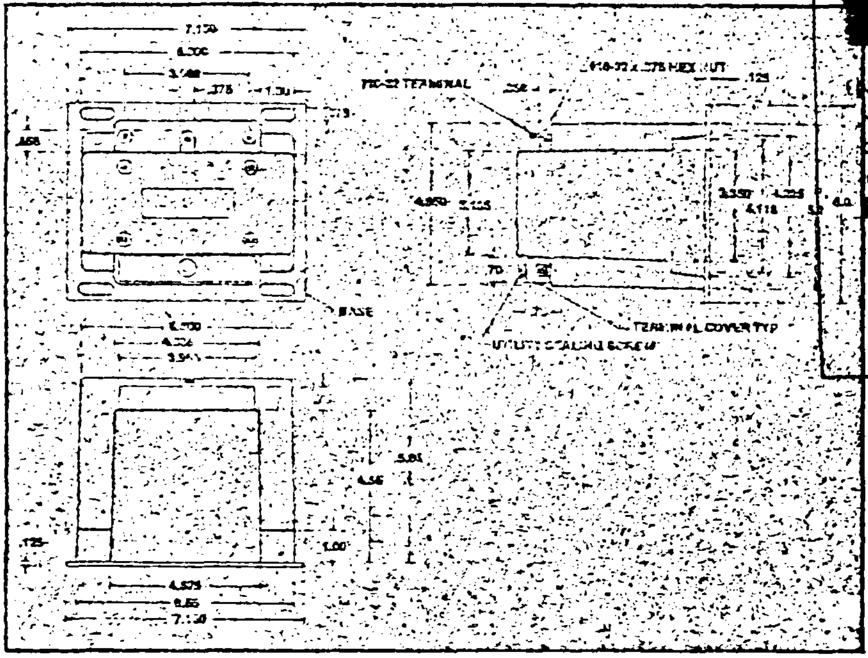

☐ REVIEWED/NO COMMENTS
[redacted] REVIEW
☐ SEE LETTER OF TRANSMITTAL
ENG. DEPT. [redacted] 1980
NEITHER REVIEW, COMMENT, NOR ... RELIEVES MANUFACTURER OR CONTRACTOR FROM RESPONSIBILITY FOR COMPLIANCE WITH SPECIFICATIONS OR WITH ALL OTHER CONTRACT REQUIREMENTS.
RETURN TO
Stearns-Roger
INCORPORATED
ON OR BEFORE

The Abbott Magnetics Model 450 is designed for use with all types of electrical indicating, metering, recording instruments and protective relays in electrical power systems. The magnetic core and coils are mounted in a reinforced plastic case with a metal mounting base. The unit is epoxy filled to insure insulation qualities

Secondary and primary windings are fully insulated and terminated at threaded studs. The units are supplied with terminal covers.

Winding ratios are indicated on the nameplate as well as on the side of each unit as shown in the outlined drawing above.

C.E. FILE
Stearns-Roger
I. No. C21700 SEP 22 '80
SR No. F235-1 File No. 039
OK

● FREQUENCY:	60 Hz
● STANDARD SECONDARY VOLTAGE:	120 V
● INSULATION CLASS:	600 V, 10 Kv, Full Wave BIL
● ACCURACY CLASS:	0.3 class at W, X, M,
● CONTINUOUS THERMAL CURRENT RATING FACTOR:	750 VA at 30°C Amb., 500VA at 55°C Amb.
● WEIGHT:	22 lb.

CAT. NO. (with cover)	PRIMARY VOLTS	WINDING RATIO
450-120	120/208 Y	1:1
450-240	240/416 Y	2:1
450-288	288/500 Y	2.4:1
450-300	300/520 Y	2.5:1
450-480	480/480 Y	4:1
450-600	600/600 Y	5:1

FINAL MAR 3 1981

Other ratios and burden capacities available upon request.

Continued on reverse side.

POTENTIAL TRANSFORMER MODEL 450

RATED 0.3 AT W, X, Y & Z BURDENS
TYPICAL PERFORMANCE
CIRCLE DIAGRAM, 0.3 ACCURACY CLASS

☐ REVIEWED/NO COMMENTS
☐ [redacted] R REVIEW
EN 4 1986
NEITHER REVIEW NOR ACCEPTANCE FOR REVIEW RELIEVES MANUFACTURER OR CONTRACTOR FROM RESPONSIBILITY FOR COMPLIANCE WITH SPECIFICATIONS OR ALL OTHER CONTRACT REQUIREMENTS.
RETURN TO
Stearns Roger
INCORPORATED
ON OR BEFORE

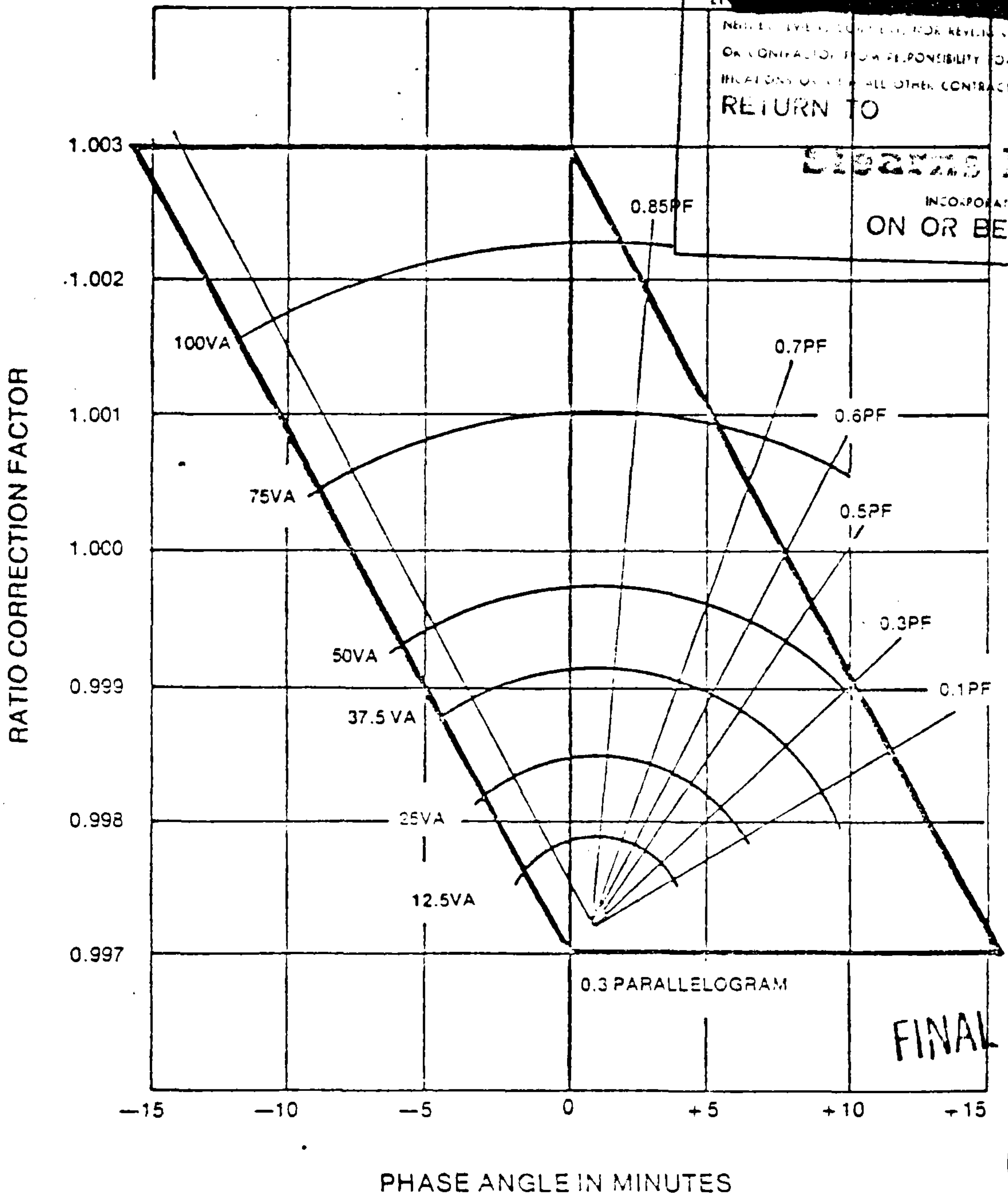

FINAL MAR 3 1981

C. E. FILE

Stearns-Roger

C21700 SEP 22 '80

SR No F 2351 File No 1040

OK

YEW

medallion series

C. E. FILE

Stearns-Roger

C21700 SEP 22 '80

SR No F235-1 file No 041 ok

☐ R...
☐ REVIEW...
[redacted]
...OR REVIEW
ENG. DE...
1.4. 1980
NEITHER ... OR CONTRACT ... IFICATIONS OF ... COMPLY WITH SPEC... CONTRACT REQUIREMENTS.

RETURN TO
Stearns-Roger
INCORPORATED
ON OR BEFORE

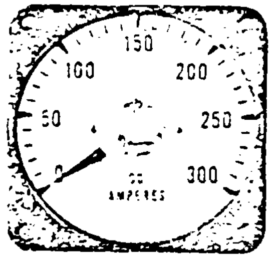

Model 2101
DC Amps

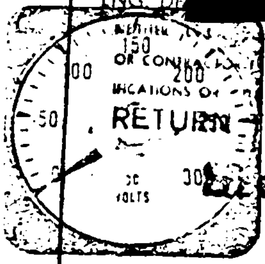

Model 2101
DC Volts

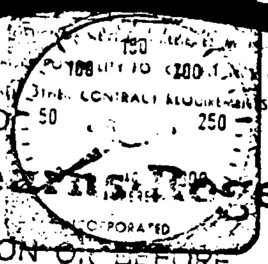

Model 2102
AC Amps

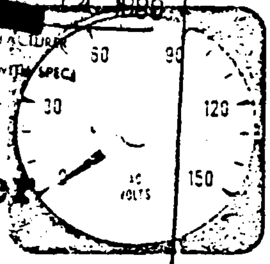

Model 2102
AC Volts

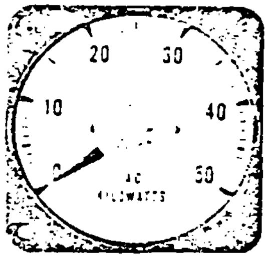

Model 2105
AC Power (single phase)

GENERAL SPECIFICATIONS

Principle of Operation: See descriotions below.
Accuracy: See accuracy specifications below.
Position of use: Vertical (Scale)
Full Scale Deflection Angle: 250° (except Synchroscopes: 360°)
Full Scale Length: Approx. 7¼" (183 mm)
Pointer: Sword type, black
Scale Plate: Platform type, white

Case: ABS, black. Meets UL94/ASTM 635-68
Cover: Methacrylic acid resin with anit-static processing on both sides
Standard Color: Black (Munsell N 1.5, 0)

Terminal Plate: Phenol resin, black. Meets UL94/ASTM 635-68
Mounting Screw: 5 mm in diameter
Measuring Terminal: 5mm in diameter (nut type)
Dimensions: See page 12

Weight: Model 2101 ...... Approx. 0.91 lbs. (0.4 kg)
Model 2102 Ammeter .... Approx. 1.3 lbs. (0.6 kg)
Model 2102 Voltmeter .... Approx. 1.1 lbs. (0.5 kg)
Models 2105 & 2106 ...... Approx. 2.2 lbs. (1 kg)
Models 2107 & 2108 .. Approx. 1.3 lbs. (0.6 kg)
Model 2109 .... Approx. 3.7 lbs. (1.7 kg)

Dielectric Test Voltage: 2,600V AC for one minute between the electrical circuit and the case.

MODELS AVAILABLE

FINAL

MODEL		DESCRIPTION	ACCURACY
210		CIRCULAR SCALE SWITCHBOARD INSTRUMENTS	
1	DC	AMMETERS & VOLTMETERS (Moving Coil Type)	±1.0% of full scale value
2	AC	AMMETERS & VOLTMETERS (RMS Sensing Transducer Type)	±1.0% of full scale value
5		WATTMETERS (Pulse-width Modulation Type)	±1.0% of full scale value
6		VARMETERS (Pulse-width Modulation Type)	±1.0% of full scale value
7		POWER FACTOR METERS (Phase Angle Sensing Transducer Type)	±4° in phase angle
8		FREQUENCY METERS (Frequency Sensing Transducer Type)	±0.5% of full scale value
9		SYNCHROSCOPES (Moving Iron Type)	

Example: Model 2105 .... Circular Scale Switchboard AC Wattmeter
EXTERNAL SHUNTS & MULTIPLIERS .... Pages 13 & 14
EXTERNAL CURRENT & POTENTIAL TRANSFORMERS .. Pages 14 & 15

medallion series

C. E. FILE
Stearns-Roger

C21700 SEP 22 '80
SR No F235-1 File No 042 ok

☐ REVIEWED/NO COMMENTS
[redacted]
REVIEW
☐ SEE LETTER OF TRANSMITTAL
ENG. DEPT. B [redacted] 1 4 1980
RETURN TO
Stearns-Roger
INCORPORATED
ON OR BEFORE

MODEL 2101 DC VOLTMETER (M[redacted]Type)

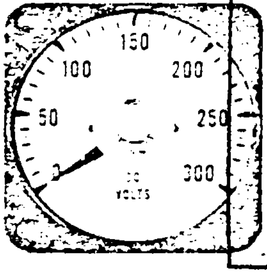

CATALOG NUMBER	FULL SCALE VALUE	APPROX. CURRENT LOSS	
2101-21	30V		
2101-22	50V		
2101-23	100V	1mA	
2101-24	150V		
2101-25	300V		
2101-26	[illegible]mA		

Note: *1 For higher ranges than 300V, use External Multiplier (see page 14) with a 1mA DC Voltmeter.

FINAL MAR 3 1981

MODEL 2101 DC AMMETER (Moving Coil Type)

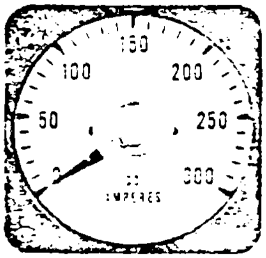

Catalog No.	Full Scale Value	Approx. Internal Resistance Or Voltage Drop	
2101-01	500 μA	670Ω	
2101-02	1mA	190Ω	
2101-03	2mA	17Ω	
2101-04	5mA	6.2Ω	
2101-05	10mA	Voltage Drop 50mV	
2101-06	20mA		
2101-07	50mA		
2101-08	100mA		
2101-09	200mA		
2101-10	500mA		

Catalog No.	Full Scale Value	Approx. Internal Resistance Or Voltage Drop	
2101-11	1A	Voltage Drop 50mV	
2101-12	1.5A		
2101-13	2A		
2101-14	3A		
2101-15	5A		
2101-16	10A		
2101-17	15A		
2101-18	20A		
2101-19	30A		
2101-20	*50mV	2mA	

Notes: *1. For higher ranges than 30A, use External Shunt with a 50mV DC Ammeter (See page 15)
2. A pair of special 59" 0.05Ω(x2) leads are supplied with each 50mV DC Ammeter.

For industrial transmitters, 4-20 mA with a 0-100% scale is available for $96.00.

MODEL 2102 AC VOLTMETER (RMS Sensing Transducer Type)

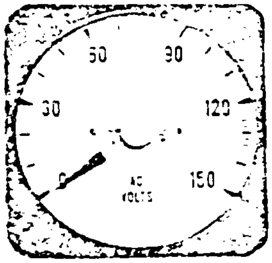

CATALOG NUMBER	FULL SCALE VALUE	APPROX VOLT-AMPER LOSS	
2102-05	150V	3.3VA	$
2102-06	300V	1.8VA	
2102-09	600V	1.2VA	
2102-07	Expanded scale 70 to 130V*	0.5VA	
2102-08	Expanded scale to 140 to 260V*	1.0VA	

Notes: 1. For higher ranges than 600V, use Potential Transformers (see page 14) with a 150V AC Voltmeter.
*2. Accuracy within expanded portion of the scale: ±1.5%.

MODEL 2102 AC AMMETER (RMS Sensing Transducer Type)

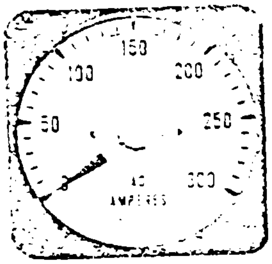

CATALOG NUMBER	FULL SCALE VALUE	APPROX VOLT-AMPER LOSS	
2102-01	[illegible]A		
2102-02	5A		
2102-03	Two fold—extended (5 to 10A)	0.4VA	
2102-04	Three fold—extended (5 to 15A)		

Note: 1. For higher ranges than 5A, use External Current Transformer (see page 15) with a 5A AC Ammeter.

[redacted]

Type IAV

Time Delay [redacted] Relays

...IT FOR REVIEW
...SMITTAL
DATE OCT 14 1980

DESCRIPTION

The Type IAV relays are single phase induction disk relays designed to respond, with time delay, to either an increasing or a decreasing voltage, or both. Some models are frequency compensated, and some include an instantaneous unit (hinged armature type). Most models listed in the Selection Guide include a target seal-in unit on all contacts.

The basic mechanism of all models is an induction-disk unit with either a tapped coil or a tapped resistor for setting pickup.

[In the overvoltage models, the relay is calibrated on increasing voltage to close the normally open contact at tap setting. The time dial adjusts the angle through which the disk rotates and, hence, the time delay.]

In the undervoltage models, the relay is calibrated on decreasing voltage to close the normally closed contact at tap setting. The time dial adjusts the angle through which the disk rotates at voltages above tap setting.

In the combined overvoltage and undervoltage models, the relay is calibrated on increasing voltages to close the normally open contacts at tap setting and on decreasing voltages to close the normally closed contacts at various percentages of tap setting.

For the undervoltage and combined undervoltage and overvoltage relays, the two connecting plug S2 case is used to prevent false tripping when the relay is removed or replaced. Either plug completes the coil circuit and thus opens the normally closed contact used with undervoltage operation. Both plugs are needed to complete the contact circuits.

APPLICATION

OVERVOLTAGE RELAYS

Type IAC overvoltage relays are used for protection against simple overvoltage, but other applications are also common. They are applied to ground detection, both on feeders and on ac generators, and they are also used in timed switching arrangements, where their dependability and accuracy make them preferable to purely mechanical timing relays.

For protection against overvoltage in a three-phase system, use the IAV51A relay (Fig. 2). For instantaneous protection as well as time delay, use the IAV71B.

For the detection of grounds on ungrounded three-phase systems, two methods are in general use. One measures the zero sequence potential (Fig. 4), and the other measures the actual voltage between the system neutral and ground (Fig. 6).

For the circuit of Figure 4, use Type IAV51D, a low pickup relay which has its operating circuit tuned to the rated frequency. The potential transformers used in this circuit are connected grounded-Y primary, broken- delta secondary. The primaries should have ratings equal to the line-to-line voltage of the system, and the secondaries can have ratings of either 67 or 115 volts.

Select a relay model with a continuous rating of three times the potential transformer secondary voltage. This is necessary because, when a ground occurs, the zero sequence voltage may be up to three times the normal transformer secondary voltage. Thus, with a potential transformer secondary rated 67 volts, use a 199-volt relay coil. For ground fault protection of ac rotating machines, use a circuit similar to that shown in Figure 6 applying Type IAV51D or IAV51K relays. These are low-pickup relays whose coil circuits are tuned by capacitors to their rated frequencies. The circuits are thus rendered only one-eighth as sensitive to the third harmonic as they are to the rated frequency.

In Figure 6, a distribution transformer is connected between the machine neutral of the generator and ground. Normally there is no voltage on the transformer but during a fault, there is a voltage with a worst-case magnitude equal to the phase-to-ground value.

Greater sensitivity can be obtained by choosing a distribution transformer with higher secondary voltage. In such a case, the relay will not carry the fault voltage continuously, and provision must be made to de-energize the operating coil using an auxiliary relay. The short-time rating for both IAV51D and LAV51K is 360 volts for 10 seconds.

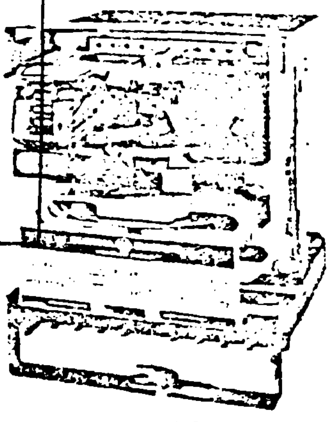

(Photo 8043218)

Fig. 1. Type IAV71A overvoltage relay (out of case)

The IAV51M relay may be used for a definite time delay and the time is adjustable from 3 to 30 seconds by means of a time dial. Operating time is defined as the time to close the contacts with voltage suddenly raised from zero to the rated value.

UNDERVOLTAGE RELAYS

For simple undervoltage protection, select the IAV relay according to the time voltage characteristic required.

In a typical automatic-preferred emergency throwover scheme, the undervoltage contacts of the IAV54E relay are used to trip the circuit breaker in the normal source circuit, and the auxiliary switch (52b) of this normal source breaker permits the voltage closing contacts of an IAV51A relay in the emergency source to close its circuit breaker.

COMBINED UNDERVOLTAGE AND OVERVOLTAGE RELAYS

Types IAV53, IAV69, IAV70, and IAV73 relays are time-delay, over- and undervoltage relays having two contacts, one of which closes on overvoltage and the other on undervoltage.

REFERENCES:

Dimensions	Section 7380
How to Order	Section 7210
Prices	Section 7212
Instruction Books	Section 7216
Target and Contact Data	Section 7381
Relay Standards	Section 7382
Renewal Parts Information	Section 7395-96
Sales Office	Section 95, Back Cover

Data subject to change without notice

Stearns-Roger C. E. FILE

C21700 SEP 22 '80

SR No F235-1 File No 043 OK

FINAL MAR 3 1981

Type IAV
Time Delay Voltage Relays

FREQUENCY COMPENSATION

The following Type IAV relays are frequency compensated:

Overvoltage relays—IAV71, IAV72
Undervoltage relays—IAV74A
Undervoltage and Overvoltage relays—IAV73A, IAV73B

These relays have uniform characteristics over a frequency range of 30-90 Hertz. A typical application is on systems supplied by hydro-generators, where the frequency tends to increase when faults occur. Frequency compensation is provided by an R-C circuit across the wound shading coils of the induction disk operating coil and core unit.

CHARACTERISTICS

Type IAV relays will continuously withstand rated voltage on all taps, and tap voltage on all taps above rated voltage. For the minimum and maximum taps shown in the list below, the following intermediate taps are available:

Tap Range	Taps Available
5.4-20	5.4, 7.5, 12.5, 20
10-40	10, 15, 25, 40
16-64	16, 24, 40, 64
28-112	28, 42, 70, 112
55-140	55, 64, 70, 82, 93, 105, 120, 140
110-280	110, 128, 140, 164, 186, 210, 240, 280
220-560	220, 256, 280, 328, 372, 420, 480, 560

The overvoltage relays and the undervoltage relays are provided with time dials for adjustment of time delay.

The combined under- and overvoltage relays are made both with and without time-delay adjustment. Models IAV53, -69, and -73 have time delays which are functions of the setting of the undervoltage contacts. Model IAV70 has a time dial which permits adjustment of time delay independently of the voltage settings.

TRIPPING CIRCUITS AND CONTACT RATINGS

The current carrying rating of the contact circuit is determined by whether the relay has a seal-in unit and by the tap used on the seal-in coil. Without a seal-in unit the relay contacts will close and carry 30 amperes for tripping duty and 2 amperes continuously at control voltages of 250 volts dc or less. Refer Section 7381 for data on target seal-in units.

SELECTION GUIDE—Type IAV

General Description	Rated Volts Ac	Tap Range Volts		Target Seal-in	Contacts	Model Numbers		Case Size	Approx. Wt. lb (kg)	
		Min	Max			60 Hertz	50 Hertz		Net	Ship
OVERVOLTAGE (DEVICE No. 59)										
General duty, overvoltage and control switching. Time delay 1 to 10 seconds at 1.6 times tap setting.	115 208 230 460	55 70 110 220	140 140 250 560	0.2/2	1-N.O	12IAV51A1A A7A A2A A3A	12IAV51A4A A9A A5A A11A	S1	12 (5.4)	15 (6.8)
[illegible] IAV51A [illegible] 2-N.O. Contracts [illegible] get Seal-in.	115 199 230	55 70 110	140 140 230	0.2/2 (1)	2-N.O.	12IAV52A1A A7A A2A	12IAV52A4A A9A A5A			
Low Pick-up										
Ground detection on 3-phase systems and on generator stator windings. Time delay 0.75 to 7.5 seconds at 200% of tap setting, or 4 seconds on N.O. 10 TDS	115* 199* 245*	10 16 28	40 64 112	0.2/2	1-N.O.	12IAV51D2A D1A D9A	12IAV51D5A D4A D10A	S1	12 (5.4)	15 (6.8)
	67*	5.4	20			12IAV51K1A	12IAV51K2A	S1†	13 (5.9)	16 (7.3)
Same as IAV51D or IAV51K except	199*	16	64		2-N.O.	12IAV52D1A		S1	12 (5.4)	15 (6.8)
2 N.O. Contacts	67*	5.4	20			12IAV52K1A	12IAV52K2A	S1†	13 (5.9)	16 (7.3)
Timing Applications										
Single circuit closes with time delay. Fixed pickup voltage. Time delay 3 to 30 seconds at rated volts.	115 208 230		55 100 110	0.2/2	1-N.O.	12IAV51M1A M4A M3A	12IAV51M2A	S1	12 (5.4)	15 (6.8)
Frequency Compensated										
Frequency sensitive applications. Otherwise same as IAV51A compensated 30-90 Hertz	115	55	140	0.2/2	1-N.O.	12IAV71A1A	12IAV71A3A	S1	13 (5.9)	(7.3)
Frequency compensated; instantaneous unit added, also frequency compensated; for hydro-generator applications, general duty for ac generator overvoltage protection and voltage regulator backup, [illegible] 10 second time delay	115 230 230	55 110 110	140 280 280			12IAV71B2A‡ B5A‡ B6A△	12IAV71B3A‡			
Similar to IAV71A except 2 N.O. Contacts			140		2-N.O.	12IAV72A1A	....			
Similar to IAV72A except includes inst. unit with 1 N.O. Contact	[redacted]					12IAV72B1A‡	12IAV72B4A‡ B3A‡			
Similar to IAV72A except includes inst. unit with 2 N.O. Contacts						....	12IAV7[illegible]			

- * IAV51D, 51K, 52D, and 52K [redacted] setting at 300 volts
- † Includes external capacitor
- ‡ Inst. unit adjustable 120-200 volts
- △ Inst. unit adjustable 150-300 volts

☐ REVIEWED/NO COMMENTS
[redacted]
FOR REVIEW
☐ SEE LETTER OF TRANSMITTAL
DEPT. BY DATE OCT 14 1980
REVIEW, COMMENT, NOR REVISION RELIEVES MANUFACTURER FROM RESPONSIBILITY FOR COMPLIANCE WITH SPECS. & FUNCTIONS OR WITH ALL OTHER CONTRACT REQUIREMENTS.
RETURN TO
Stearns-Roger
INCORPORATED
ON OR BEFORE

FINAL
MAR 9 1981

C. E. FILE

Stearns-Roger
C21700 SEP 22 '80
SR No F235-1 File No. 044 OK

...formation

Data subject to change without notice

GENERAL ELECTRIC

Type IAV

Time Delay Voltage Relays

SELECTION GUIDE—Type IAV

General Description	Rated Volts Ac	Tap Range Volts Min	Tap Range Volts Max	Target Seal-in	Contacts	Model Number 60 Hertz	Model Number 50 Hertz	Case Size	Approx Wt, lb (kg) Net	Approx Wt, lb (kg) Ship
UNDERVOLTAGE (Device No. 27)										
5 Sec Time Delay at zero volts if set on No. 10 TD Time Range 1 to 13 sec at 80% of tap.	67 115 208 230 460	32 55 110 110 220	80 140 280 280 560	0.2/2	1 N.C.	12IAV54E14A E1A E13A E2A E3A	...... 12IAV54E4A E5A E6A	S2	12 (5.4)	16 (7.3)
30 Sec Time Delay at zero volts if set on No. 10 TD	115 230 460	55 110 220	140 280 460			12IAV54F1A F2A F3A	...... 12IAV54F4A			
75 Sec Time Delay at zero volts on No. 10 TD	115 460	55 220	140 560			12IAV54H1A H2A	....			
Same as IAV54E except no Seal-in	115 230 460	55 110 220	140 280 560	None		12IAV54J1A J2A J3A	.... 12IAV54J4A			
5 Sec Time Delay same as IAV54E except 2 N.C.	115 230 460	55 110 220	140 280 560	0.2/2	2 N.C.	12IAV55C1A C2A C3A	12IAV55C4A C5A C9A			
30 Sec Time Delay	115 230	55 110	140 280			12IAV55F1A F2A	....			
75 Sec Time Delay	115	55	140			12IAV55H1A	......			
Frequency Compensated										
5 Sec Time Delay at zero volts on No. 10 TDS. Compensated 30-90 Hz	115	55	140	0.2/2	1 N.C.	12IAV74A1A		S2	13 (5.9)	17 (7.7)
OVER- AND UNDERVOLTAGE (Device No. 27/59)										
General duty; electrically separate contacts with target seal-in unit in series with each contact; UV adjustable from 60 to 90% of OV tap setting. Time delay 1.1 sec. at zero volts; 0.4 sec. at 2 x tap. setting.	115 230 460	55 110 220	140 280 560	0.2/2 (2)	1 N.C. 1 N.O.	12IAV53K1A K2A K3A	12IAV53K4A K5A K11A	S2	13 (5.9)	17 (7.7)
Automatic control schemes; same as IAV53K except target seal-in units are omitted	115 230 460	55 110 220	140 280 560	None		12IAV53L1A L2A L3A	12IAV53L4A L5A			
Similar to IAV53K except target seal-in units are omitted. Time delay 0.5 sec. at zero volts	115 460	55 220	140 560			12IAV53N1A N3A	....			
General duty; common connection between contacts. OV setting is independent of UV adjustment. UV adjustable from 60 to 90% of OV tap setting. Target and seal-in unit in series with each contact	120 208 240	55 110 110	140 280 280	0.2/2 (2)		12IAV69A1A A4A A2A	12IAV69A3A			
Automatic control schemes; same as IAV69A except target seal-in units are omitted	120 240	55 110	140 280	None		12IAV69B1A B2A	12IAV69B3A			
General duty; common connection between contacts. UV setting fixed at 90% or more of OV tap setting; target seal-in unit in series with each contact; adjustable time delay 30 seconds max. on complete loss of V	120 240	55 110	140 280	0.2/2 (2)		12IAV70A1A A2A	....			
Automatic control schemes; same as IAV70A except target seal-in units are omitted	120 240	55 110	140 280	None		12IAV70B1A B2A	12IAV70B3A			
Frequency Compensated										
General duty; same as IAV53K except Frequency Compensated, 30-90 Hz	115	55	140	0.2/2 (2)	1 N.C.	12IAV73A1A	......	S2	13 (5.9)	17 (7.7)
Automatic control schemes; same as IAV53L except Frequency Compensated, 30-90 Hz				None	1 N.O.	12IAV73B1A	......			

FINAL
MA[illegible] 1981

C. E. FILE

☐ REVIEWED/NO COMMENTS
☐ RE[redacted]
FOR REVIEW
TTAL
OCT 14 1980
NEITHER REVIEW, COMMENT, NOR REVISION RELIEVES MANUFACTURER OR CONTRACTOR FROM RESPONSIBILITY FOR COMPLIANCE WITH SPECIFICATIONS OR WITH ALL OTHER CONTRACT REQUIREMENTS.
RETURN TO
Stearns-Roger
INCORPORATED
ON OR BEFORE

Stearns-Roger
C21700 SEP 22 '80
SR No. F 235-1 File No. 045 OK

New information.

Data subject to change without notice

Type IAV
Time Delay Voltage Relays

☐ [redacted]
☐ [redacted] T FOR REVIEW
☐ SEE LETTER OF TRANSMITTAL
ENG. DEPT. BY [redacted] DATE OCT 14 1980
NEITHER REVIEW, COMMENT, NOR REVISION RELIEVES MANUFACTURER OR CONTRACTOR FROM RESPONSIBILITY FOR CONFORMANCE WITH SPECIFICATIONS OR OTHER CONTRACT REQUIREMENTS.
Stearns-Roger
INCORPORATED
RET 10/14/80
ON OR BEFORE

DIAGRAMS AND CHARACTERISTICS

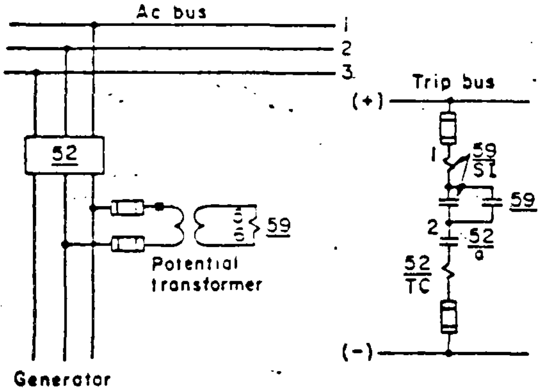

Fig. 2. Typical external for Type IAV51A used for overvoltage protection.

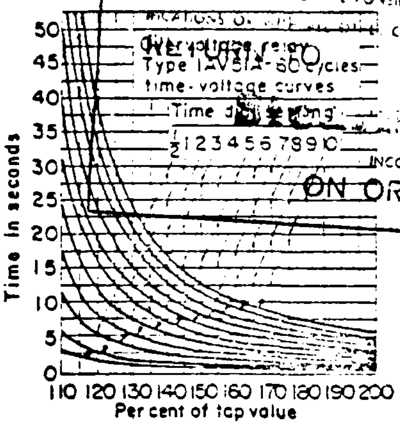

Fig. 3. Typical Time Voltage curve for Types IAV51A, 71 and 72

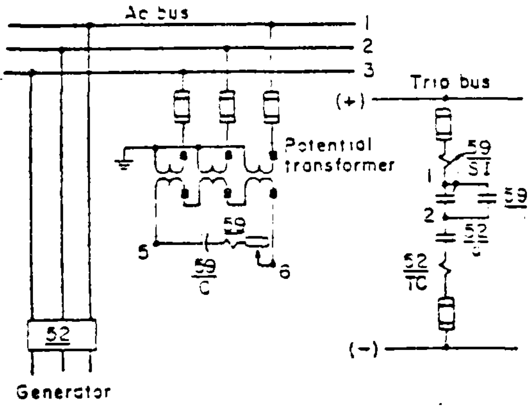

Fig. 4. Typical external for ground fault protection 3ph. Ungrounded system Type IAV51D

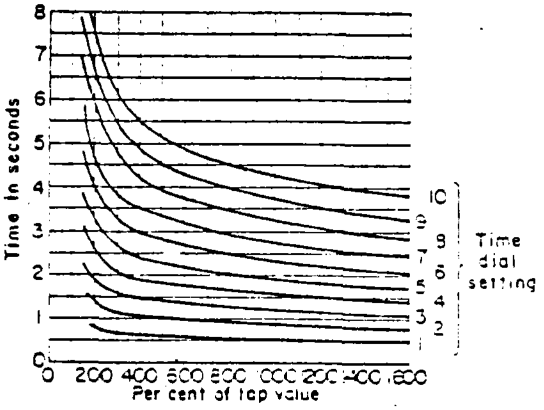

Fig. 5. Typical Time Voltage curve for Types IAV51D and 51K

MAR 3 1981

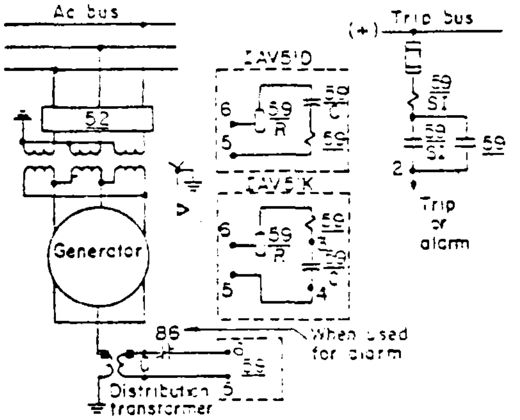

Fig. 6. Typical external for ground fault protection of an ac rotating machine Type IAV51D or 51K

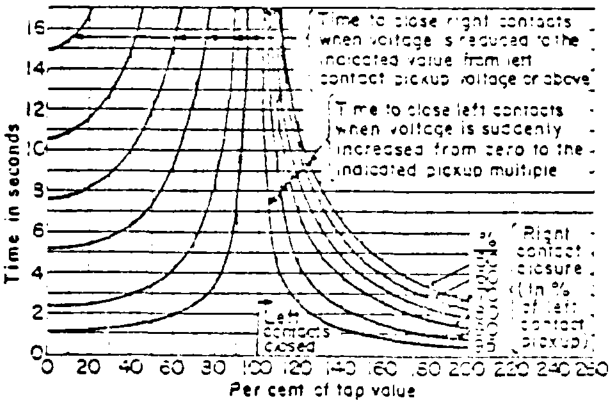

Fig. 7. Typical Time Voltage curve for Types IAV53K, 53L, 73A and 73B

C.E. FILE

Stearns-Roger

C21700 SEP 22 '80

3.2.2-47

SR No F2351 File No. 046 OK

41-1

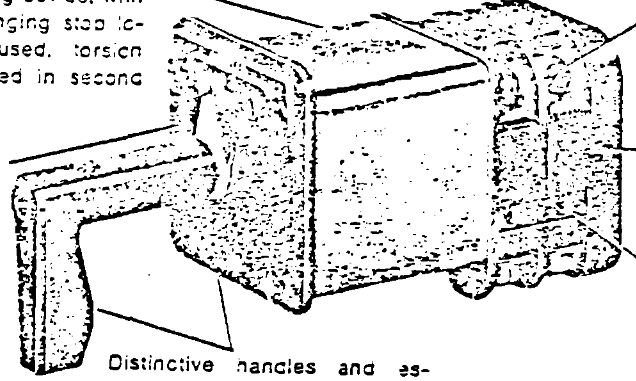

Position and action chamber houses positioning device, with facilities for changing stop locations. When used, torsion springs are placed in second half of chamber.

Circuit designation plate is marked for identification of switch functions.

Angled terminal connections permit easy wiring.

Enclosed contacts mean switch does not need separate cover.

Contact numbers clearly identified

Distinctive handles and escutcheons tailor each switch to its particular application.

3040787

☐ REVIEWED – NO COMMENTS
[redacted]
FOR REVIEW
☐ SEE LETTER OF TRANSMITTAL
ENG. DEPT. BY [redacted] DA OCT 14 19[illegible]
[illegible] OR CONTRACTOR FROM RESPONSIBILITY FOR COMPLIANCE WITH SPECIFICATIONS OR [illegible] ALL OTHER CONTRACT REQUIREMENTS.
RETURN TO
Stearns-Roger
Stearns-Roger
C21700 INCORPORATED SEP 22 '80
ON OR BEFORE
SR No F235-1 File No ~~047~~ ok

C. E. FILE

The SBM
Compact Cam-operated

- Control and transfer
- For control panels and switchboards
- Up to 600 volts

FINAL MAR 3 1981

The SBM is a compact positive acting switch for control and transfer service on panels and switchboards, 600 volts and under. Up to 10 stages, 2 contacts per stage can be provided, with independent action, both electrically and mechanically, through eight positions.

Ideal For Switchboards—

—The SBM switch is especially adaptable for switchboard applications where space is at a premium. When a control switch is required for use in an explosion-proof or watertight enclosure, space is normally not a controlling factor, and the SB-1 switch, which is somewhat larger, is used.

The SBM switch is normally supplied for mounting on panels up to ¼ inch thick. If requested, it can also be supplied for mounting on panels of one and one and a half inches.

Compact design of the SBM switch permits close center-to-center line mounting distances and, at the same time, easy access to the terminals for wiring. Also, since the switch is enclosed, there is no need for clearance at the back of the panel to remove a separate cover. This further reduces space requirements.

Ratings

The SBM switch is rated for a mechanical life of 500,000 operations. The electrical ratings are 600 volts ac or dc, 20 amps continuous or 250 amps for three seconds. The interrupting rating depends upon the voltage and character of the circuit. The table below illustrates the interrupting duty of a single contact and contacts in series when various conditions exist on a circuit.

SBM is recognized under the component program of Underwriters' Laboratories, Inc.

Interrupting Rating (amperes)

Circuit Volts	Non-inductive		Inductive	
	Number of Contacts			
	1	2 in series	1	2 in series
24 dc	10	30	8	25
48 dc	8	25	6	18
125 dc	5	15	4	10
250 dc	1	3	1	2.5
600 dc	0.4	0.8	0.3	0.7
115 ac	40	75	24	50
230 ac	25	50	12	25
460 ac	20	30	10	20
600 ac	15	25	8	12

Stearns-Roger C.E. FILE

C21700 SEP 22 '80

SR No. F235-1 File No. 048 OK

Construction Features

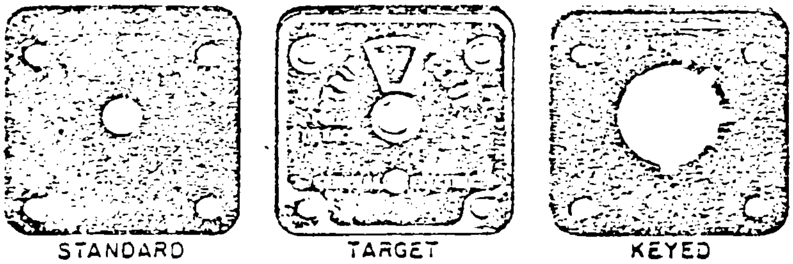

3040785

Escutcheons

Two basic types of escutcheons are available: the standard and the target. The standard type shown on the left is a molded black phenolic material with white lettering for clear reading of the positions. A target type escutcheon, shown in the middle, is normally furnished on breaker control switches. An aluminum front plate houses the target mechanism with a window in the center to show green for the trip position, red for the closed position, and black for the pull-to-lock position. The target has a slip action so that it will remain green when the handle returns to NORMAL from the TRIP position, and red when it returns from the CLOSE position. This shows the operator the last operation of the switch.

On the right a modified standard is shown with keyways for use with removable type handle.

Aluminum circuit designation plates are available for all three types.

The standard and keyed escutcheons can be furnished in painted colors of red, green, yellow, blue, gray, orange, brown, and white, but must be specified on each order.

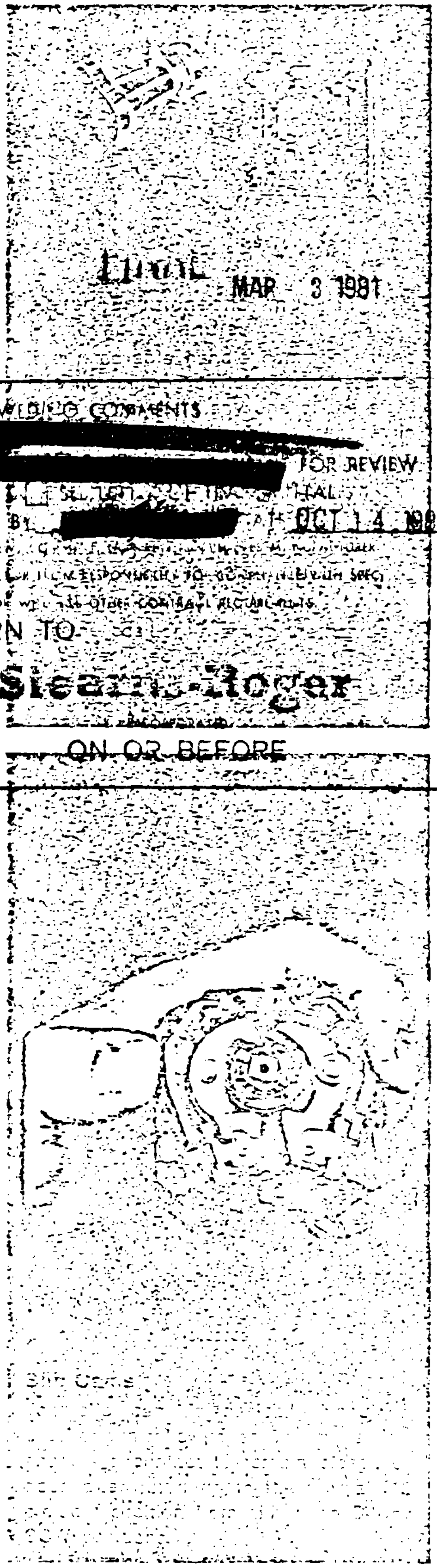

Final MAR 3 1981

☐ REVIEWED NO COMMENTS

[redacted]

FOR REVIEW

☐ [illegible] SUBMITTAL

BY [redacted] OCT 14 1980

URN TO

Stearns-Roger

ON OR BEFORE

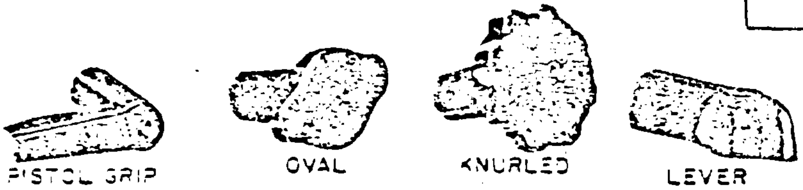

3040783

Handles

Four types of molded black phenolic handles shaped for easy gripping are available with the SBM switch: pistol grip, oval, knurled, and lever. Any of the standard handles except the lever, may be adapted for removable handle keying. A fixed handle may be easily removed for replacement by a screw in the front of the handle. A white pointer, furnished with the handles (except the lever) and mounted near the escutcheon, give a clear identification of the position that the handle is in. For match and line up with SB-1 switches, type SB-1 pistol grip, oval, knurled, and round handles can be furnished for use with SBM switches. The same colors are available for the handles as were listed for the escutcheons.

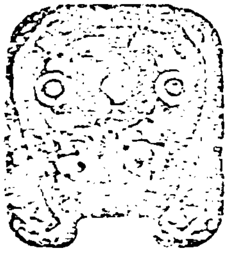

3040734

Cams and Contacts

The silver to silver contacts of the SBM switch are of double-break design, as seen at left, which reduces arcing and subsequent pitting of contacts. Each contact is operated by a double surface cam, one surface for closing, the other surface for opening. This construction provides opening and closing action not dependent on springs.

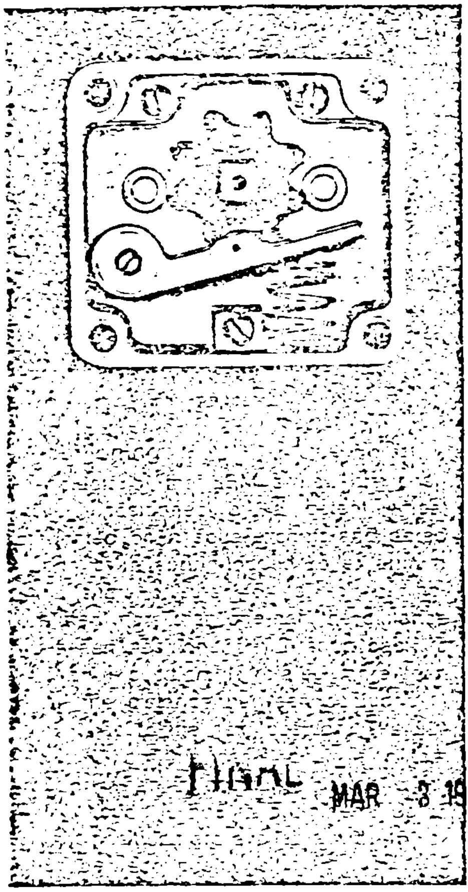

Final MAR -3 1981

Terminal Connections

Terminal connections are brought to the corners of each stage, allowing screw connections to be made over a large angle. This angular displacement of connection points allows the switches to be mounted on three-inch centers or less.

Jumpers

Jumpers are furnished assembled, where required, on all standard listed switches. For special switches or unlisted switches, separate jumpers can be ordered.

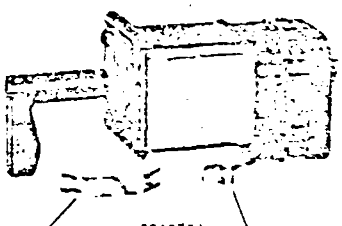

5040734

Stearns-Rog

Contacts Handle End		Positions 3	2	1
	1			X
o—||—o o—||—o	2		X	
o—||—o	3	X	X	

Break-Before-Make Contacts

Contacts on SSM switches are normally non-overlapping (break-before-make). This sequence is illustrated above, which shows that contact No. 1 opens before contact No. 2 closes.

Another normal function is illustrated by contact No. 3, which is shown closed in two adjacent positions. When switching between these positions, this contact will always remain closed.

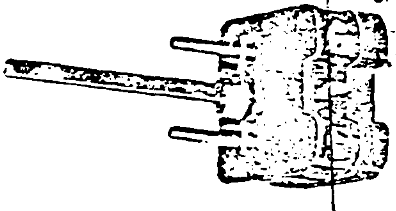

5040797

Spring Action

Torsion springs return the switch handle to or towards the 12 o'clock or No. 3 position. The travel of the handle is limited to 90° to either side of this position. The switches may be furnished with spring return both ways, or only one way, with maintaining action in the opposite direction. You can also have spring return from position No. 1 (9 o'clock) to position No. 2 (10 o'clock) and/or spring return from position No. 5 (3 o'clock) to position No. 4 (2 o'clock) with maintained action in the other positions. Torsion springs are housed in the rear half of the positioning chamber. There is no need to modify the chamber to accommodate the springs.

Contacts Handle End			*	3	*	2	*	1	*	Off
Odd	Even									
		1	X	X	X	X	X		X	X
		2					X	X	X	
		3	X	X	X		X	X	X	X
		4			X	X	X			
		5	X		X	X	X	X	X	X
		6	X	X	X					

Overlapping Contacts

REVIEWED NO COMMENTS

[redacted]

REVIEW

OCT 14 1980

DEPT

[redacted]

RETURN TO

Stearns-Roger

INCORPORATED

ON OR BEFORE

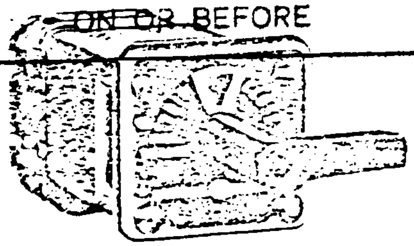

5040795

Pull-To-Lock

A pull-to-lock mechanism is designed for spring-return switches. When the handle is turned to the 9 o'clock position, it can be pulled out and locked in that position. When the handle is pushed in, the handle spring returns to the normal position. This pull-to-lock feature does not actuate contacts, but merely prevents the spring return of the handle.

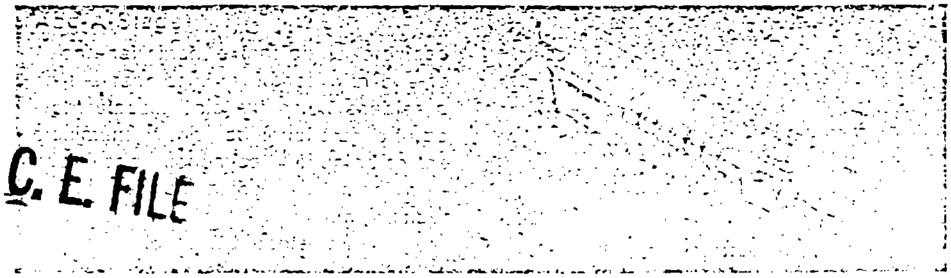

C. E. FILE

C21700 SEP 22 '80

SR No F235-1 File No 049 OK

Contact Diagrams for SBM Switch

DESCRIPTION	ESCUTCHEON & CONTACT DIAGRAM	WIRING DIAGRAM
Fig. 38. **VOLTMETER TRANSFER SWITCH**, three-phase, transfers four wires phase-to-phase and phase-to-neutral; ***Model No. 10AAC06.*** **Knurled handle.**	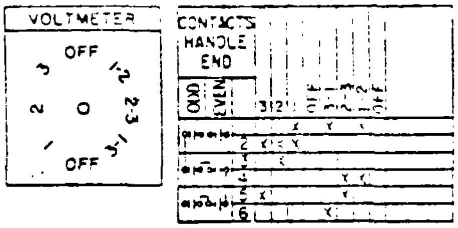	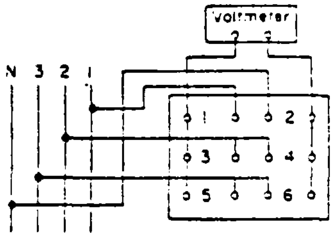
Fig. 39. **VOLTMETER SWITCH**, two three-phase, three-wire circuits, ***Model No. 10AA007.*** **Knurled handle.**	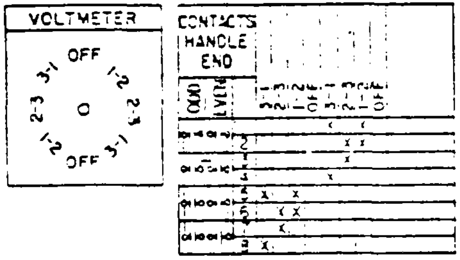	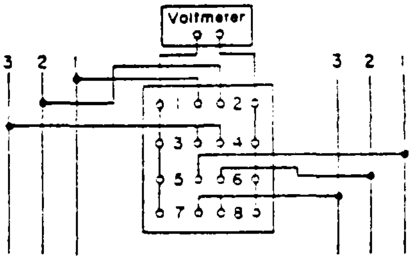
Fig. 40. **AMMETER TRANSFER SWITCH**, three CT's (connect at end of secondary), ***Model No. 10AA008.*** **Knurled handle.**	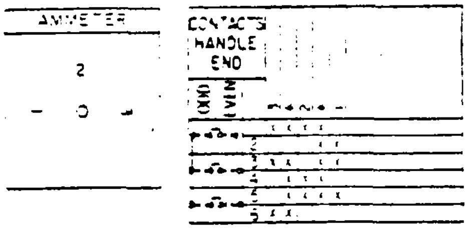	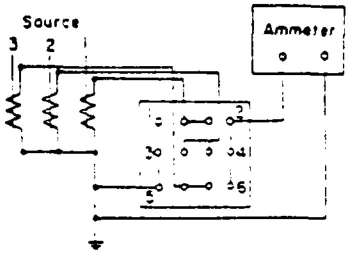
Fig. 41. **AMMETER TRANSFER SWITCH**, three CT's with off (connect at end of secondary), ***Model No. 10AAC09.*** For wiring, see Fig. 40. **Knurled handle.**	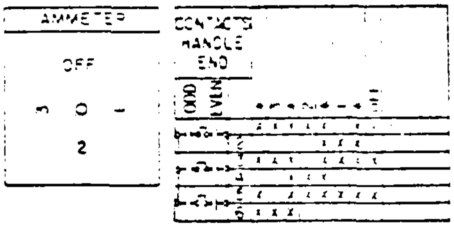	
Fig. 42. **AMMETER TRANSFER SWITCH**, three independent circuits, ***Model No. 10AA010.*** **Knurled handle.**	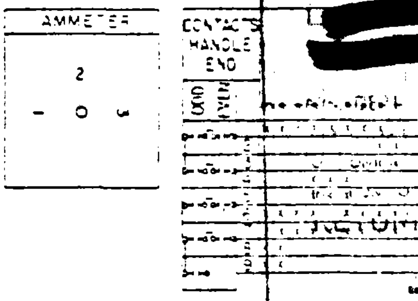	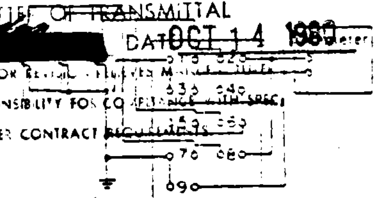

x in all contact diagrams denotes contacts closed

FINAL MAR 3 1981

C. E. FILE
Stearns-Roger
C21700 SEP 22 '8
SR No F235.1 File No 050
OK

53-1
50-2
50-4
✓

Classification of Cartridge Fuses

By Underwriters' Laboratories, Inc.

FINAL MAR 3 1981

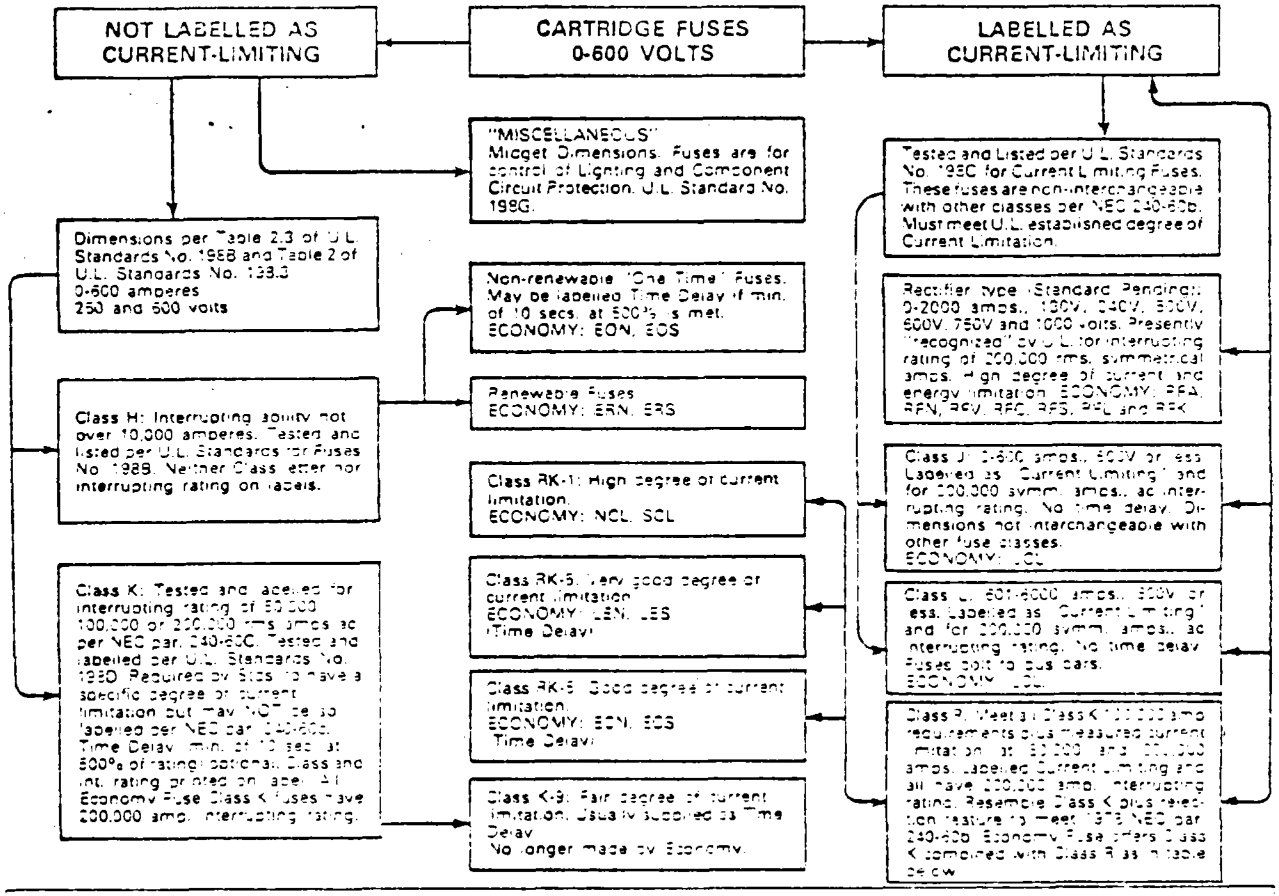

"MISCELLANEOUS" Midget Dimensions. Fuses are for control of Lighting and Component Circuit Protection. U.L. Standard No. 198G.

Dimensions per Table 2.3 of U.L. Standards No. 198B and Table 2 of U.L. Standards No. 198.3
0-600 amperes
250 and 600 volts

Class H: Interrupting ability not over 10,000 amperes. Tested and listed per U.L. Standards for Fuses No. 198B. Neither Class letter nor interrupting rating on labels.

Class K: Tested and labelled for interrupting rating of 50,000 100,000 or 200,000 rms amps ac per NEC par. 240-60C. Tested and labelled per U.L. Standards No. 198D. Required by Stds. to have a specific degree of current limitation but may NOT be so labelled per NEC par. 240-60c. Time Delay (min. of 10 sec. at 500% of rating) optional. Class and int. rating printed on label. All Economy Fuse Class K fuses have 200,000 amp. interrupting rating.

Non-renewable "One Time" Fuses. May be labelled Time Delay if min. of 10 secs. at 500% is met.
ECONOMY: EON, EOS

Renewable Fuses
ECONOMY: ERN, ERS

Class RK-1: High degree of current limitation.
ECONOMY: NCL, SCL

Class RK-5: Very good degree of current limitation.
ECONOMY: LEN, LES
(Time Delay)

Class RK-5: Good degree of current limitation.
ECONOMY: ECN, ECS
(Time Delay)

Class K-9: Fair degree of current limitation. Usually supplied as Time Delay.
No longer made by Economy.

Tested and Listed per U.L. Standards No. 198C for Current Limiting Fuses. These fuses are non-interchangeable with other classes per NEC 240-60b. Must meet U.L. established degree of Current Limitation.

Rectifier type (Standard Pending): 0-2000 amps., 130V, 240V, 300V, 600V, 750V and 1000 volts. Presently "recognized" by U.L. for interrupting rating of 200,000 rms. symmetrical amps. High degree of current and energy limitation. ECONOMY: RFA, RFN, RFV, RFC, RFS, RFL and RFK

Class J: 0-600 amps., 600V or less. Labelled as "Current Limiting" and for 200,000 symm. amps., ac interrupting rating. No time delay. Dimensions not interchangeable with other fuse classes.
ECONOMY: JCL

Class L: 601-6000 amps., 600V or less. Labelled as "Current Limiting" and for 200,000 symm. amps., ac interrupting rating. No time delay. Fuses bolt to bus bars.
ECONOMY: LCL

Class R: Meet all Class K 100,000 amp requirements plus measured current limitation at 50,000 and 200,000 amps. Labelled Current Limiting and all have 200,000 amp. interrupting rating. Resemble Class K plus rejection feature to meet 1975 NEC par. 240-60b. Economy Fuse offers Class K combined with Class R as in table below.

SELECTION CHART

TRADE NAME →		ECO ®	ECO ®	Economy ® Renewable	Economy ® Renewable	ECON ®	ECON ®	ECON-LIMITER ®	ECON-LIMITER ®	ECONOL M ®	ECONOL M ®	ECONOL M ®	ECONOL M ®	ECO ®/ECON ®	ECO ®/ECON ®	ECO ®/ECON ®
		Catalog Symbol Identification														
DESCRIPTION		EON	EOS	ERN	ERS	ECN	ECS	LEN	LES	NCL	SCL	JCL	LCL	MCL	MOL	MEN
	U.L. CLASS	H	H	H	H	RK5	RK5	RK5	RK5	RK1	RK1	J	L	Miscellaneous		
INTERRUPTING RATING	Not Over 10,000 Amps	x	x	x	x										x	x
	100,000 Amps. a.c.													x		
	200,000 Amps. a.c.					x						x	x			
DEGREE OF CURRENT LIMITATION	Excellent															
	Very Good							x								
	Good					x										
DIMENSIONS	10.02" x 1 1/2"													x	x	x
	"N.E.C."	x	x	x	x											
	Non-interch. Dim. per U.L.					x				x	x	x	x			
VOLTS (a.c.)	250 or less	x		x		x		x		x					x	x
	600 or less		x		x		x									
TIME-DELAY (MIN. OF 10 SEC. AT 500%)						x	x	x	x							

☐ REVIEWED/NO COMMENTS
☐ R[redacted] FOR REVIEW
☐ SEE LETTER OF TRANSMITTAL
INC. DEPT. B[redacted] DATE OCT 14 1980
ACCEPTANCE, REVIEW, COMMENT, NOR REVISION HEREOF ... RELIEVE
OF CONTRACTOR FROM RESPONSIBILITY FOR COMPLIANCE WITH SPECI...
... WITH ALL OTHER CONTRACT REQUIREMENTS.
RETURN TO
Stearns-Roger
INCORPORATED
ON OR BEFORE
Stearns-Roger

C. E. FILE

C21700 SEP 22 '80

3.2.2-52

SR No F235-1 File No 1051 OK

FINAL MAR 9 1981

ECO® "One-Time" Non-Renewable Fuses. U.L. Class H. Federal Specification WF-1726

CLASS
1340

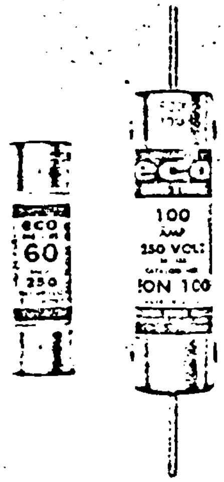

ECO® "ONE-TIME" CARTRIDGE FUSES are UL listed and labelled as Class H for use on circuits where available fault currents do not exceed 10,000 amperes. They feature caps with staking to prevent cap rotation, links visibly soldered to caps and the rating stamped in for identification. This fuse provides lowest cost short-circuit protection. For detailed data, ask for Class 1340 Descriptive Sheets.

Amperes*	Catalog Number	List Each	NET PRICE EACH		Per Carton
			Less Than $100 Net	$100 Net and over	
250 VOLTS					
1, 2, 3, 4, 5, 6, 7, 8, 9, 10, 12	Catalog Symbol "EON" followed by amperes				10
15, 20, 25, 30					10
35, 40, 45, 50, 60					10
70, 80, 90, 100					5
110, 125, 150, 175, 200					
225, 250, 300, 350, 400					
450, 500, 600					
500 VOLTS					
1, 2, 3, 4, 5, 6, 7, 8, 9, 10, 12	Catalog Symbol "EOS" followed by amperes				10
15, 20, 25, 30					10
35, 40, 45, 50, 60					10
70, 80, 90, 100					5
110, 125, 150, 175, 200					
225, 250, 300, 350, 400					
450, 500, 600					

*Ferrule type, 60 amp and below. Knife blade type, 65 amp and above.

☐ REVIEWED [illegible] NTS
[redacted]
[illegible] FOR REVIEW
☐ SEE LETTER OF TRANSMITTAL
ENG. DEPT. BY [redacted] DATE OCT 14 1980
FURTHER REVIEW, COMMENT [illegible] MANUFACTURER OR CONTRACTOR FROM RESPONSIBILITY TO CONFORMANCE WITH SPECIFICATIONS OR WITH ALL OTHER CONTRACT REQUIREMENTS.
RETURN TO
Stearns-Roger
INCORPORATED
ON OR BEFORE

ECONOMY® Renewable Cartridge Fuses and Renewal Links, U.L. Class H, Federal Specification WF-1726

CLASS
1320

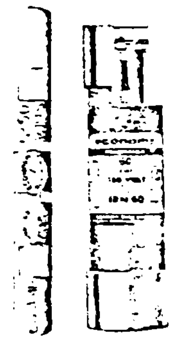

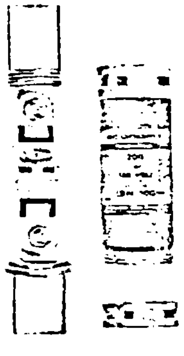

Economy® Renewable Fuses are U.L. listed as Class H for use on circuits having fault currents not in excess of 10,000 amperes.

Renewable Ferrule Type Fuses are of open end construction, with removable end plugs and slotted washers, thus permitting link renewal without marring fuse contact area.

Renewable Knife-blade Type Fuses have both ends open and accessible, permitting easy cleaning when necessary. Knife-blade terminals are connected by a sturdy fibre bar, making renewal an easy operation.

Whenever an Economy Renewable Fuse clears a fault, you can restore its original efficiency by inserting an Economy Renewal Link in the same cartridge. For detailed data, ask for Class 1320 Descriptive Sheets.

UL CLASS H Symbol ERN 250 Volts

Amperes	Sug. List Price Each	SUG RESALE Net Price Each		Per Carton
		Less Than $100 NET	$100 NET and Over	
1 2 3 4 5 6 8 10	$ 1.82	$ 1.39	$ 1.15	10
12 15 20 25 30	1.66	1.26	1.05	10
35 40 45 50 60	3.25	2.47	2.05	10
70 80 90 100	7.26	5.52	4.58	5
110 125 150 175 200	16.39	12.46	10.33	
225 250 300 350 400	29.61	22.51	18.56	
450 500 600	45.20	34.36	28.48	

UL CLASS H Symbol ERS 600 Volts

Amperes	Sug List Price Each	SUG RESALE Net Price Each		Per Carton
		Less Than $100 NET	$100 NET and Over	
1 2 3 4 5 6 8 10	$ 4.53	$ 3.44	$ 2.86	10
12 15 20 25 30	4.10	3.11	2.58	10
35 40 45 50 60	6.44	4.90	4.06	10
70 80 90 100	14.66	11.14	9.24	
110 125 150 175 200	28.43	21.51	17.31	
225 250 300 350 400	57.26	43.50	36.14	
450 500 600	81.86	62.21	51.57	

UL CLASS H Symbol ELN 250 Volts

Amperes	Sug List Price Each	SUG RESALE Net Price Each		Per Carton
		Less Than $100 NET	$100 NET and Over	
1 2 3 4 5 6 8 10	$ .34	$ .25	$ .22	20
12 15 20 25 30	.12	.087	.072	20
35 40 45 50 60	.23	.18	.15	20
70 80 90 100	.46	.35	.29	10
110 125 150 175 200	.91	.70	.53	5
225 250 300 350 400	1.33	1.09	1.15	5
450 500 600	2.74	2.06	1.73	2

UL CLASS H Symbol ELS 600 Volts

Amperes	Sug List Price Each	SUG RESALE Net Price Each		Per Carton
		Less Than $100 NET	$100 NET and Over	
1 2 3 4 5 6 8 10	$ .57	$ .44	$ .36	20
12 15 20 25 30	.25	.19	.15	20
35 40 45 50 60	.46	.35	.29	20
70 80 90 100	.91	.70	.58	10
110 125 150 175 200	1.71	1.30	1.08	5
225 250 300 350 400	3.20	2.43	2.01	5
450 500 600	4.45	3.38	2.81	2

C. E. FILE Stearns-Roger

[illegible] C21700 SEP 22 '80

3.2.2-53 SR No F235.1 File No 052 OK

[illegible] MAR 8 1981

Econolim® Current-Limiting, Energy Limiting, and High Interrupting Capacity Fuses

Fuses under the trademark "Econolim" are manufactured with silver links, quartz-sand filler, and melamine tubes. This line includes Underwriters' Laboratories, Inc. Classes RK1, J, and L, as well as midget dimension MCL fuses (see page 61). All of these fuses have a high degree of current limitation with low I^2t energy let-through and low peak let-through current as well as the highest interrupting rating recognized by U.L. for low voltage fuses. Ask for detailed technical data by the FPE Class Number shown.

CLASS 1317 · Econolim® High Interrupting Capacity Fuses, UL Class RK1; Federal Specification WF-1814

Use on applications for fault currents up to 200,000 amperes, where very fast clearing is required ~~to~~ limit current and where fuse holders are of NEC dimensions. Ideal for protection of molded case circuit breakers with inadequate interrupting ratings. These fuses meet the current limiting requirements of UL Class RK1 standards. For detailed information ask for Catalog Section 1317.

UL CLASS RK1 Symbol NCL or NCL-R 250V

Amperes	Sug. List Price Each	SUG RESALE Net Price Each	
		Less Than $100 NET	$100 NET and Over
1, 2, 3, 4, 5, 6, 7, 8, 10, 12, 15, 20, 25, 30	$ 2.77	$ 2.11	$ 1.75
35, 40, 45, 50, 60	6.53	4.98	4.11
70, 80, 90, 100	13.98	10.55	8.75
110, 125, 150, 175, 200	26.72	20.99	17.40
225, 250, 300, 350, 400	52.55	41.99	34.81
450, 500, 600	71.81	54.58	45.24

Symbol SCL or SCL-R 600V

Amperes	Sug. List Price Each	SUG RESALE Net Price Each		Per Carton
		Less Than $100 NET	$100 NET and Over	
1, 2, 3, 5, 6, 8, 10, 15, 20, 25, 30	$ 3.56	$ 2.71	$ 2.24	10
35, 40, 45, 50, 60	7.71	5.85	4.85	10
70, 80, 90, 100	16.53	12.56	10.41	1
110, 125, 150, 175, 200	31.26	23.75	19.69	1
225, 250, 300, 350, 400	62.30	47.35	39.25	1
450, 500, 600	84.74	64.40	53.38	1

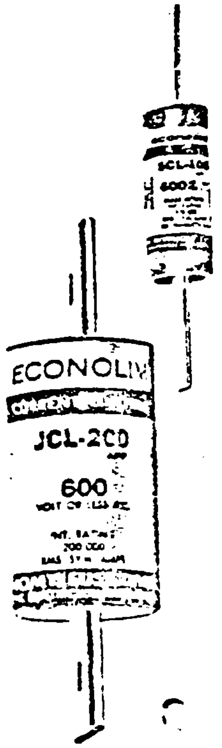

CLASS 1318 Econolim® Current-Limiting Fuses, UL Class J; Federal Specification WF-1814

Applications of this type fuse are for fault currents up to 200,000 amperes, for high degree of current limitation, and to comply with NEC paragraph 240-60(b). For use only in Class J fuse holders which will not accept Class H or K fuses. For detailed information ask for Catalog Section 1318.

UL CLASS J Symbol JCL 1-600 Amperes

Amperes	Sug. List Price Each	SUG RESALE Net Price Each		Per Carton
		Less Than $100 NET	$100 NET and Over	
1, 3, 4, 5, 6, 10, 15, 20, 25, 30				10
35, 40, 45, 50, 60				10
70, 80, 90, 100				1
110, 125, 150, 175, 200				1
225, 250, 300, 350, 400				
450, 500, 600				1

NOTE: Will Not Fit Standard NEC Fuse Clips.

CLASS 1319 Econolim® Current-Limiting Fuses, UL Class L; Federal Specification WF-1814

Used on installations for fault currents up to 200,000 amperes, for mounting in bolted pressure switches, service interrupters, switchgear, and fused air circuit breakers. Ideal for protection of large circuit breakers which may not have adequate interrupting ratings.

Catalog number LCU is the same as LCL except without time delay features. Use for coordination purposes where faster operating times are necessary.

ECONOLIM®
CURRENT LIMITING FUSES UL Class L

Class L Amperes 600V	SUG. RESALE Net Price Each	Per Carton
Symbol LCL 601-6000 Amperes		
LCL 601, 800, 1200	$ 73.13	1
LCL 1600	104.58	1
LCL 2000	137.86	3
LCL 2500	187.44	3
LCL 3000	216.69	3
LCL 4000	90.63	3
LCL 5000	53.41	3
LCL 6000	42.05	3
Symbol LCU 601-6000 Amperes		
LCU 601, 650, 700, 800, 1000, 1200	75.15	1
LCU 1350, 1600	07.47	1
LCU 1800, 2000	41.32	1
LCU 2500	91.59	3
LCU 3000	219.93	3
LCU 3500, 4000	299.93	3
LCU 4500, 5000	355.70	3
LCU 6000	452.64	3

Intermediate ampere ratings or blown-fuse indicators are available on Special Order

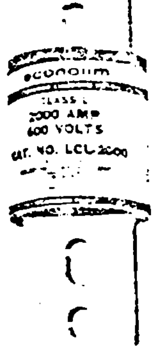

CLASS 1314

Econolim® Cable Limiters are available for use with cable sizes [illegible] AWG to 750 MCM. For details, ask for Catalog Section 1314.

☐ REVIEWED/NO COMMENTS

[redacted]

☐ SEE LETTER OF TRANSMITTAL

RESUBMIT FOR REVIEW

OCT 14 1980

ENG. DEPT BY [redacted]

NEITHER REVIEW [illegible] RESPONSIBILITY TO COMPLY WITH SPEC[illegible] IFICATIONS OR [illegible] OTHER CONTRACT [illegible]

RETURN TO

INCORPORATED

ON OR BEFORE

Military-Specification Fuses: FPE Economy Fuse can provide fuses to meet Department of Defense Specification MIL-F15160E.

General Services Administration Fuses. FPE-Economy Fuse can provide fuses under the various parts of GSA Specification W-F-791d and e, as well as fuses "Qualified Product Listed" under Spec. [illegible] W-F 1725 [illegible]

C. E. FILE

Stearns-Roger

C21700 SEP 22 '80

3.2.2-54 F2351 053 OK

SR No_________ File No_________

50-3

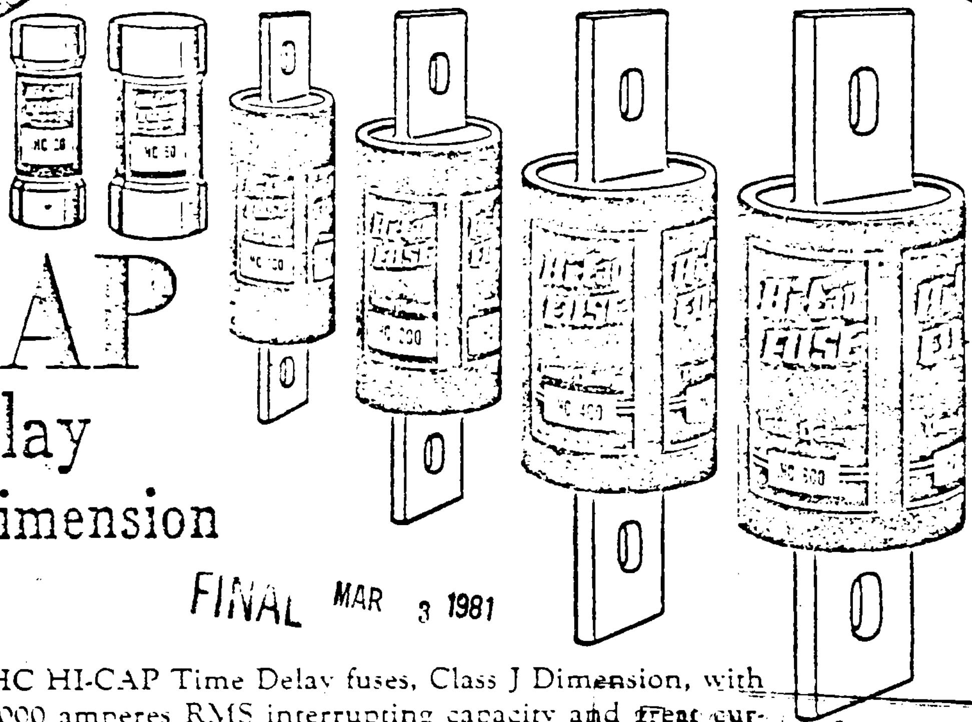

HI-CAP
Time Delay
Class J Dimension
FUSES

FINAL MAR 3 1981

JHC HI-CAP Time Delay fuses, Class J Dimension, with 200,000 amperes RMS interrupting capacity and great current limitation — to which has now been added substantial time delay. CSA Listed at 100,000 amperes.

☐ ... COMMENTS
☐ ... COMMENTS
[redacted] RESUBMIT FOR REVIEW
... TRANSMITTAL
ENG. DEPT. BY [redacted] DATE OCT 14 1980
... RELIEVES MANUFACTURER ... COMPLIANCE WITH SPECS ... CONTRACT REQUIREMENTS.
RETURN TO
...Roger
INCORPORATED
ON OR BEFORE

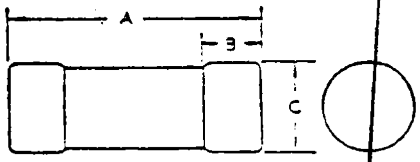

Symbol	Ampere Rating	Dimensions in Inches A	B	C
JHC	15 to 30	2 1/4	1/2	13/16
	35 to 60	2 3/8	5/8	1 1/16

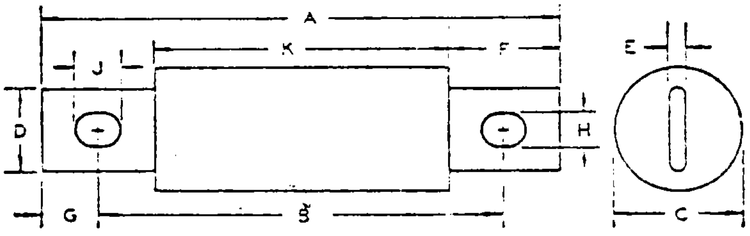

Symbol	Ampere Rating	Dimensions in Inches A	B	C	D	E	F	G	H	J	K
JHC	65 to 100	4 5/8	3 5/8	1 1/8	3/4	1/8	1	1/2	9/32	3/8	2 5/8
	110 to 200	5 3/4	4 3/8	1 5/8	1 1/8	3/16	1 3/8	11/16	9/32	3/4	3
	225 to 400	7 1/8	5 1/4	2 1/8	1 5/8	1/4	1 7/8	13/16	13/32	17/32	3 3/8
	450 to 600	8	6	2 1/2	2	3/8	2 1/8	1	17/32	[illegible]	[illegible]

C. E. FILE

Stearns-Roger

FOR DETAILED INFORMATION — ASK FOR BUSS BULLETIN

FRH. 021700 SEP 22 '80

F235.1

OK

53-1
53-2

CLF Fuses, Current-limiting

High-interrupting Capacity

Current Rating: 3–4000 Amperes   Interrupting Rating: 200,000 Amperes, rms Symmetrical

Apr. 11, 1977
Effective Apr. 11

WELDING FUSE (800–2000 amps, 600 volts ac)

Similar in short-circuit protection characteristics to the Class L fuse, the welding fuse is specifically designed for welding circuit applications.

Switchgear Equipment Products-P(R21000)

Rating (volts, amps)	Catalog Number	★ Net Price, Each	Rating (volts, amps)	Catalog Number	★ Net Price, Each
600/800	GF30W8	$75.35	600/1600	GF30W16	$115.70
600/1000	GF30W10	75.35	600/2000	GF30W20	144.35
600/1200	GF30W12	75.35			

CLASS J FUSE ADAPTER KITS

A new adapter kit permits 225–600-ampere Class J fuses to mount in 600-volt Class K5 fuse spacings. This kit comprises adapter bars which bolt directly to the fuse tangs.

FINAL MAR 9 1981

Switchgear Equipment Products-P(R21000)

Amperes	Class J fuse	Catalog number for adapter kit for Class K5 mounting	★ Net Price, Each
225	GF8B225	011687113G1	$10.75
250	GF8B250	011687113G1	10.75
300	GF8B300	011687113G1	10.75
350	GF8B350	011687113G1	10.75
400	GF8B400	011687113G1	10.75
450	GF8B450	011687113G2	15.75
500	GF8B500	011687113G2	15.75
600	GF8B600	011687113G2	15.75

CLASS J PULLOUT BLOCK

(1–30 amperes, 600 or less volts)

Poles	Amperes	Catalog No.	★ Net Price, Each	Dim. Fig.
2	1-30	011684078		7A
3	1-30	011684075		7B

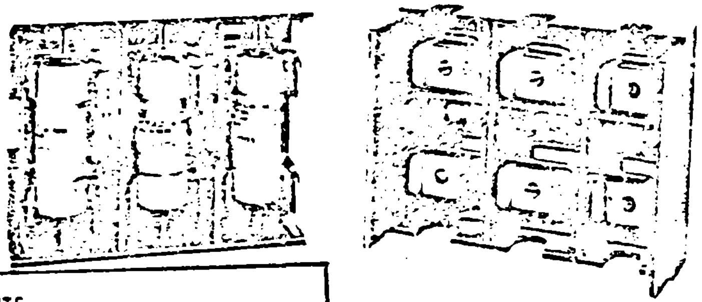
(Photo 1226009)

Fig. 7 Class J pullout block

☐ REVIEWED/NO COMMENTS
☐ REVIEWED/SEE COMMENTS
[redacted] MIT FOR REVIEW
☐ SEE ... SUBMITTAL
ENG. DEPT. BY [redacted] DATE OCT 14 198
ON CONTRACTOR FROM RESPONSIBILITY FOR ...
... ALL OTHER CONTRACT REQUIREMENTS.
RETURN TO
Stearns-Roger
INCORPORATED
ON OR BEFORE

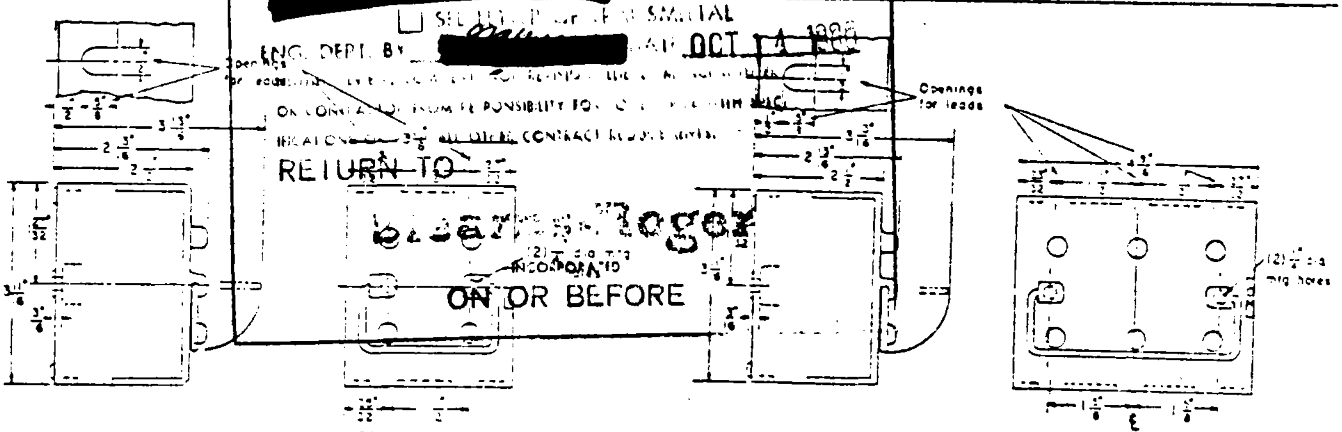

Fig. 7A   Fig. 7B

Class J Pullout Blocks Dimensions

C.E. FILE

★Changed since May 10, 1976 issue

Stearns-Roger

Prices and data subject to change without notice

GENERAL ELECTRIC

C21700 SEP 22 '80
F2351 055 OK

FUSE HOLDERS

53-3

FINAL MAR 6 1981

CLASS H & CLASS R

30/60 AMP - 250/600 VOLT

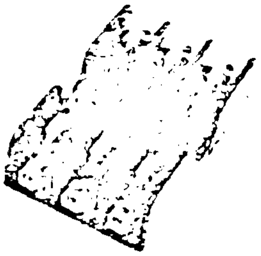

100-600 AMP - 250/600 VOLT

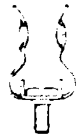

S = Screw Connector

SP = Sems Pressure Connector

CLASS H FUSE CLIPS

B = Box Connector

R = Reinforcing Spring

S = Screw Connector

SP = Sems Pressure Connector

CLASS R FUSE CLIPS

B = Box Connector

CATALOG NUMBER AND SPECIFICATIONS

CLASS H CAT. NO.	CLASS R CAT. NO.	POLES	VOLTS	AMPS	CLASS H & R FUSE SIZE	UL	
F30A1S	R30A1S	1	250	30	All holders accept fuses 9/16" Diameter x 2" Long	Yes	Yes
F30A2S	R30A2S	2	250	30		Yes	Yes
F30A3S	R30A3S	3	250	30		Yes	Yes
F30A1SP	R30A1SP	1	250	30		Yes	Yes
F30A2SP	R30A2SP	2	250	30		Yes	Yes
F30A3SP	R30A3SP	3	250	30		Yes	Yes
F30A1B	R30A1B	1	250	30		Yes	Yes
F30A2B	R30A2B	2	250	30		Yes	Yes
F30A3B	R30A3B	3	250	30		Yes	Yes
6F30A1S	6R30A1S	1	600	30	All holders accept fuses 13/16" Diameter x 5" Long	Yes	Yes
6F30A2S	6R30A2S	2	600	30		Yes	Yes
6F30A3S	6R30A3S	3	600	30		Yes	Yes
6F30A1SP	6R30A1SP	1	600	30		Yes	Yes
6F30A2SP	6R30A2SP	2	600	30		Yes	Yes
6F30A3SP	6R30A3SP	3	600	30		Yes	Yes
6F30A1B	6R30A1B	1	600	30		Yes	Yes
6F30A2B	6R30A2B	2	600	30		Yes	Yes
6F30A3B	6R30A3B	3	600	30		Yes	Yes
SCREW CONNECTIONS ARE AVAILABLE FOR 60 AMP - 600 VOLT APPLICATIONS (CONSULT FACTORY)							
6F60A1B	6R60A1B	1	600	60	Accepts fuses 1-1/16" Diameter x 5-1/2" Long	Yes	Yes
6F60A2B	6R60A2B	2	600	60		Yes	Yes
6F60A3B	6R60A3B	3	600	60		Yes	Yes
F60A1S	R60A1S	1	250	60	All holders accept fuses 13/16" Diameter x 3" Long	Recognized	No
F60A2S	R60A2S	2	250	60		Recognized	No
F60A3S	R60A3S	3	250	60		Recognized	No
F60A1B	R60A1B	1	250	60		Listed	Yes
F60A2B	R60A2B	2	250	60		Listed	Yes
F60A3B	R60A3B	3	250	60		Listed	Yes
F100A1B	R100A1B	1	250	100	Accept fuses 1" Diameter x 5-7/8" long	Yes	Yes
F100A2B	R100A2B	2	250	100		Yes	Yes
F100A3B	R100A3B	3	250	100		Yes	Yes
6F100A1B	6R100A1B	1	600	100	Accept fuses 1-1/4" Diameter x 7-7/8" long	Yes	Yes
6F100A2B	6R100A2B	2	600	100		Yes	Yes
6F100A3B	6R100A3B	3	600	100		Yes	Yes
F200A1B	R200A1B	[illegible]	250	200	Accepts fuse 1-1/2" Diam. x [illegible]	Yes	Yes
F200A3B	R200A3B	3	250	200		Yes	Yes
6F200A1B	6R200A1B	[illegible]	600	200	Accepts fuse 2-1/2" x 9-5/8"	Yes	Yes
6F200A3B	6R200A3B	3	600	200		Yes	Yes
F400A1B	R400A1B	[illegible]	250	400	Accepts fuses 2" Diam. x 8-5/8"	Yes	Yes
F400A3B	R400A3B	3	[illegible]	400		Yes	Yes
6F400A1B	6R400A1B	1	600	400	Accepts fuses 2-1/2" Diam. x 11-5/8"	Yes	Yes
6F400A3B	6R400A3B	3	600	400		Yes	Yes
F600A1B	R600A1B	1	250	600	Accepts fuse 2-15/16" x 10-3/8"	Yes	Yes
F600A3B	R600A3B	3	250	600		Yes	Yes
6F600A1B	6R600A1B	[illegible]	600	600	Accepts fuse 2-13/32" Diam. x 13-3/8"	Yes	Yes
6F600A3B	6R600A3B	3	600	600		Yes	Yes

☐ REVIEWED [illegible]
☐ REVIEW D[illegible]
[redacted]
[illegible] SUBMIT FOR REVIEW
☐ [illegible] SMITTAL
ENG. DEPT. B [redacted]
DATE OCT 14 1980
INEIT [illegible] MANUFACTURER
OR CONF[illegible] RESPONSIBILITY FOR COMPLIANCE WITH SPECI
FICATIONS [illegible] CONTRACT REQUIREMENTS.
RETURN[illegible]
[illegible] Roger
[illegible] OR BEFORE

Reinforcing Members are available for 30 and 60 Amp fuse holders on request — add "R" before the above catalog number. Reinforcing Members are standard on 100, 200 and 400 Amp fuse holders.
Reinforcing Members are standard on 30 through 400 Amp Class R fuse holders.

C. E. FILE

Stearns-Roger

bowling green, ohio 43402 telephone (419) 352-8441
SPECIAL PRODUCTS

C21700 SEP 22 '80

F235.1 1056 OK

3.2.2-57 SR No______ File No______

56-1
57-1

HEAVY DUTY

FINAL MAR 3 1981

TERMINAL BLOCK - BARRIER TYPE

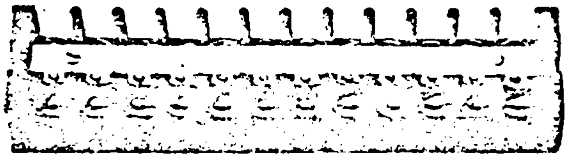

*Refer to Bulletin 5.0 for Heavy Duty Ratings and Standards in Marathon's engineering catalog.

ELECTRICAL RATING

—600 Volt*
—up to 75 Amps depending on termination used*
—Wire Range
will accommodate up to a #10 AWG wire in accordance with the National Electrical Code

Screws—Brass, nickel plated, 10-32x7/16 serrated washer head, standard.

1500 Series	**1600 Series**
5/8" Line to line spacing	21/32" Line to line spacing
U Slot Mount	Inboard Mount

CATALOG NUMBER AND SPECIFICATIONS

1500 1600		1500 DJ 1600 DJ		1500 DJSV 1600 DJSV		1500 ST 1600 ST		1500 SC 1600 SC	
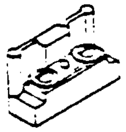		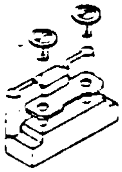		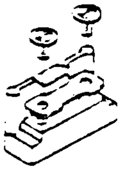		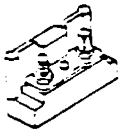		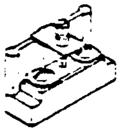	
non removable connector marking strip included		removable connector with brass insert, marking strip included		removable connector with brass insert removable cover included		10/32 stud connector, marking strip included		short circuiting bar with brass insert, 4 shorting pins per block	
No. of term.	Cat. No.	No. of term.	Cat. No.	No. of term.	Cat. No.	No. of term.	Cat. No.	No. of term.	Cat. No.
4	1504		1504DJ	4	1504DJSV	4	1504ST	4	1504SC
6	1506	6	1506DJ	6	1506DJSV	6	1506ST	6	1506SC
8	1508	8	1508DJ	8	1508DJSV	8	1508ST	8	1508SC
12	1512	12	1512DJ	12	1512DJSV	12	1512ST	12	1512SC
4	1604	4	1604DJ	4	1604DJSV	4	1604ST	4	1604SC
6	1606	6	1606DJ	6	1606DJSV	6	1606ST	6	1606SC
8	1608	8	1608DJ	8	1608DJSV	8	1608ST	8	1608SC
12	1612	12	1612DJ	12	1612DJSV	12	1612ST	12	1612SC

TERMINAL BLOCK - ENCLOSED TYPE

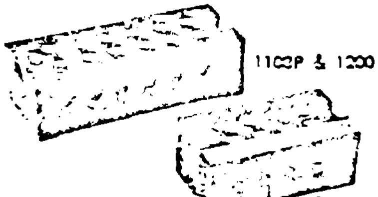

1103P & 1200

1100 Series

ELECTRICAL RATING
—300 Volts*
—55 Amps*
—Wire size - #14-#6 AWG Copper

1103P & 1200 Series

ELECTRICAL RATING
—1103P Series, 600 Volt - 70 Amps*
—1200 Series, 600 Volt - 70 Amps*

Wire Range	1103P	1200
	#14-#4 AWG Copper	#18-#4 Copper
	#8-#4 AWG Aluminum	#12-#4 Aluminum

CATALOG NUMBER

SERIES -	1100	1103P	1200
NO. OF TERM.	CAT. NO.	CAT. NO.	CAT. NO.
2			1202
3		1103P	
4	1104		1204
6	1106		1206
7	1107		
8	1108		
12	1112		

☒ REVIEWED/NO COMMENTS
☐ [redacted]
[redacted]
☐ S[illegible]
ENG. DEPT. BY [redacted]
NEITHER [illegible] OR CONTRACTOR FROM [illegible] IFICATIONS O[illegible] CONTRACT
RETURN TO
Stearns-Roger
INCORPORATED
ON OR BEFORE

RESUBMIT FOR REVIEW

OCT 14 1980

MARATHON SPECIAL PRODUCTS bowling green, ohio (419) 352-8441

Stearns-Roger

C.F. FILE

Consult engineering catalog for [illegible]

I.H. 021700 SEP 22 '80

3.2.2-58

SR No F235.1 File No. 0570K

FINAL MAR 3 1981

TERMINAL and SPLICE
For Copper
HYLUG and HYLINK
Types YA, YS

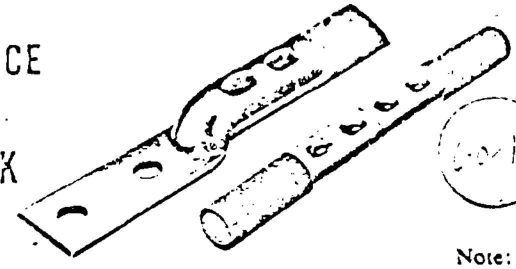

NEST AND INDENTOR AS LISTED RESULTS IN THIS TYPE OF INDENT

DIE SET AS LISTED RESULTS IN A CIRCUMFERENTIAL CRIMP

Copper HYLUG and HYLINK compression connectors for copper wire. All sizes are tin-plated to resist corrosion.

Note: Die indexes and tooling listed between the heavy lines apply to the conductor and connectors listed within the same lines. Both HYDENT and over head die sets are listed.

[illegible]	[illegible]	[illegible]	[illegible]	[illegible]	G	[illegible]	[illegible]	[illegible]	[illegible]	[illegible]	[illegible]	[illegible]	[illegible]	[illegible]
6 Str.	¼	1	YA6C	YS6C	⅜	¼	7	NEST INDENTOR	—	A6CD Y34PR 1	—	—	—	—
	½	2 NEMA	YA6C-2N		¹³⁄₁₆	⅝	7	DIE SET	—	A5CR 2	U5CRT 2	—	—	—
4 Str.	¼	1	YA4C	YS4C	⁷⁄₁₆	¼	8	NEST INDENTOR	—	A4CD Y34PR 1	—	—	—	—
	½	2 NEMA	YA4C-2N		¹³⁄₁₆	⅝	8, 161, 242	DIE SET	— W161 2 W242 4	A4CR 2 A161 1 A242 2	U4CRT 2 U161 1 U242 2	—	— — C242 1	— — L242 1
3 Str.	⁵⁄₁₆	1	YA3C	YS3C	½	⅜	9	NEST INDENTOR	—	A3CD Y34PR 1	—	—	—	—
	½	2 NEMA	YA3C-2N		¹³⁄₁₆	⅝	9, 162, 203	DIE SET	— — —	A3CR 2 — A203 2	U3CRT 2 U203 2	—	—	—
2 Str.	⁵⁄₁₆	1	YA2C	YS2C	⅝	⅜	10	NEST INDENTOR	—	A2CD Y34PR 1	—	—	—	—
	½	2 NEMA	YA2C-2N		¹³⁄₁₆	⅝	10, 162	DIE SET	— W162 5	A2CR 2 A162 1	U2CRT 2 U162 1	—	— C162 1	—
1 Str.	⁵⁄₁₆	1	YA1C	YS1C	¹¹⁄₁₆	⅜	11	NEST INDENTOR	—	A1CD Y34PR 1	—	—	—	—
	½	2 NEMA	YA1C-2N		¹³⁄₁₆	⅝	11, 276	DIE SET	—	A1CR 2 A276 4	U1CRT 2 U276 4	—	—	—
1/0 Str.	⁵⁄₁₆	1	YA25	YS25	¾	⅜	12	NEST INDENTOR	—	A25D Y34PR 1	—	—	—	—
	½	2 NEMA	YA25-2N		¹³⁄₁₆	⅝	12, 163	DIE SET	— W163 4	A25R 2 A163 2	U25RT 2 U163 2	—	— C163 2	—
2/0 Str.	⅜	1	YA26	YS26	¹⁵⁄₁₆	⁷⁄₁₆	13	NEST INDENTOR	[illegible]	A26D Y34PR 1	—	—	—	—
	½	2 NEMA	YA26-2N			⅝	13, 164, 241	DIE SET	[illegible]	[illegible] 2	U26RT 2 [illegible] 2 [illegible] 2	[illegible]	[illegible]	—
3/0 Str.	½	1	YA27	YS27	¹⁵⁄₁₆	½	14	NEST INDENTOR	[illegible]	A27D Y34PR	[illegible]	[illegible]	—	—
		2 NEMA	YA27-2N			⅝	14, 243	DIE SET	— W243 3	A27R 2 A243 2	U27RT 2 U243 [illegible]	[illegible]	—	—
4/0 Str.		1	YA28	YS28	1	½	15	NEST INDENTOR	—	A28D Y34PR	[illegible]	—	C28D Y43PR 1	—
		2 NEMA	YA28-2N		1⁵⁄₁₆	⅝	15, 86, 243	DIE SET	— W86 [illegible] W243 [illegible]	A28R 2 [illegible]	U28RT 2 U86 [illegible]	—	C28R 2 C243 1	L243 1

☐ REVIEWED/NO COMMENTS

☐ REVIEWED/SEE COMMENTS

[redacted] FOR REVIEW

ENGINEERED BY [redacted]

OCT 1 4 1980

NEITHER REVIEW NOR COMMENT [illegible] RELIEVE [illegible] SUPPLIER OR CONTRACTOR FROM [illegible] FOR CONFORMANCE WITH SPEC [illegible] CONTRACT [illegible]

RETURN TO

ON [illegible] ORE

Stearns-Roger

C. E. FILE

C21700 SEP 22 '80

3.2.2-59

SR No F2351 No 0058 OK

MD-5

ANIXTER ROYAL
ROYAL ELECTRIC MANUFACTURING CO. INC.
(Effec. 11/1/75)

FLEXIBLE CONNECTORS

TYPE C

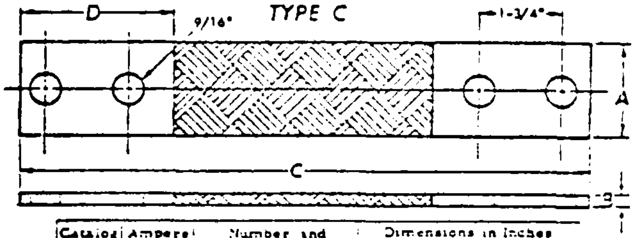

Catalog No.	Ampere Rating	Number and Size of Braid	Dimensions in Inches A	B	C	D
7312	[illegible]	[illegible]	[illegible]	[illegible]	12	3
[illegible]	350	[illegible]	[illegible]	1/4	12	3
15841	400	3 [illegible]	[illegible]	[illegible]	[illegible]	3
7314	450	[illegible] 102400	1 1/2	[illegible]	12	3
7315	550	76500 102400	1 1/2	3/8	12	3
15842	650	2 - 76500 102400	1 1/2	13/32	12	3
15843	750	3 - 76500 102400	1 1/2	7/16	12	3
7317	800	[illegible] 102400	[illegible]	1/2	12	3
15844	900	76500 102400	1 1/2	5/8	12	3
15845*	[illegible]	[illegible]	[illegible]	[illegible]	12	3
15846*	[illegible]	4 [illegible]	[illegible]	[illegible]	12	3

* Catalog #15845 consists of (1) #7314 and (1) #7317

* Catalog #15846 consists of (2) #7317.

Example for Ordering: - #7315 Royal Type C Flexible Braid Connectors "C" Dimension 16"

Type C Flexible Connectors will carry rated capacity indoors. Wire is tinned before stranding. Ferrules are completely silverplated to provide lowest contact resistance. Standard length is 12" overall. Specify length required if longer or shorter than standard. Ferrules can be furnished to any length specified.

TYPE CM

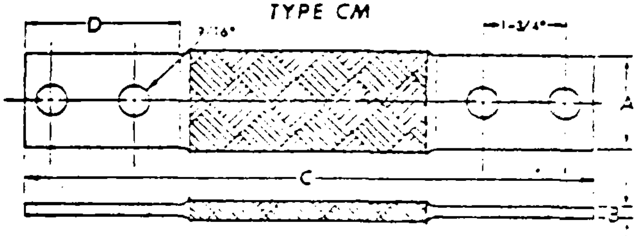

Catalog No.	Ampere Rating	Number and Size of Braid	Dimensions in Inches A	B	C	D
[illegible]	[illegible]	[illegible]	[illegible]	[illegible]	[illegible]	[illegible]
[illegible]	[illegible]	[illegible]	[illegible]	[illegible]	[illegible]	[illegible]
[illegible]	[illegible]	[illegible]	[illegible]	[illegible]	[illegible]	[illegible]
[illegible]	[illegible]	[illegible]	[illegible]	[illegible]	[illegible]	[illegible]
[illegible]	550	[illegible]	[illegible]	[illegible]	[illegible]	[illegible]
8172	[illegible]	[illegible]	[illegible]	[illegible]	[illegible]	[illegible]
8173	[illegible]	[illegible]	[illegible]	[illegible]	[illegible]	[illegible]
[illegible]	[illegible]	[illegible]	[illegible]	[illegible]	[illegible]	[illegible]
[illegible]	[illegible]	[illegible]	[illegible]	[illegible]	[illegible]	[illegible]
[illegible]	[illegible]	[illegible]	[illegible]	[illegible]	[illegible]	[illegible]
[illegible]	[illegible]	[illegible]	[illegible]	[illegible]	[illegible]	[illegible]

Example for Ordering: - #8172 Royal Type CM Flexible Braid Connectors 650 Amperes, "C" Dimension 12"

Type CM Flexible Connectors will carry rated capacity indoors. Wire is tinned before stranding. Ferrules are completely silverplated to provide lowest contact resistance. Standard length is 12" overall. Specify length required if longer or shorter than standard. Ferrules can be furnished to any length specified.

FINAL MAR 3 1981

[redacted]

[redacted] RESUBMIT FOR REVIEW
☐ SEE LETTER OF TRANSMITTAL

ENG. DEPT. BY [redacted] DATE OCT 1 1980

NEITHER REVIEW, COMMENT OR REVISION RELIEVES MANUFACTURER OR CONTRACTOR FROM RESPONSIBILITY FOR COMPLIANCE WITH SPECIFICATIONS OR OTHER CONTRACT REQUIREMENTS.

RETURN TO
Stearns-Roger
INCORPORATED
ON OR BEFORE

C. E. FILE

Stearns-Roger

C21700 SEP 22 '80

SR No. F2351 File No. 3059 OK.

3.2.2-60

NO.	NO.	[illegible]
AM	0-1	AMMETER
VM	11-1	VOLTMETER
27UV	24-1	UNDERVOLTAGE RELAY
59G	24-2	OVERVOLTAGE RELAY
AS	4-1	AMMETER SWITCH

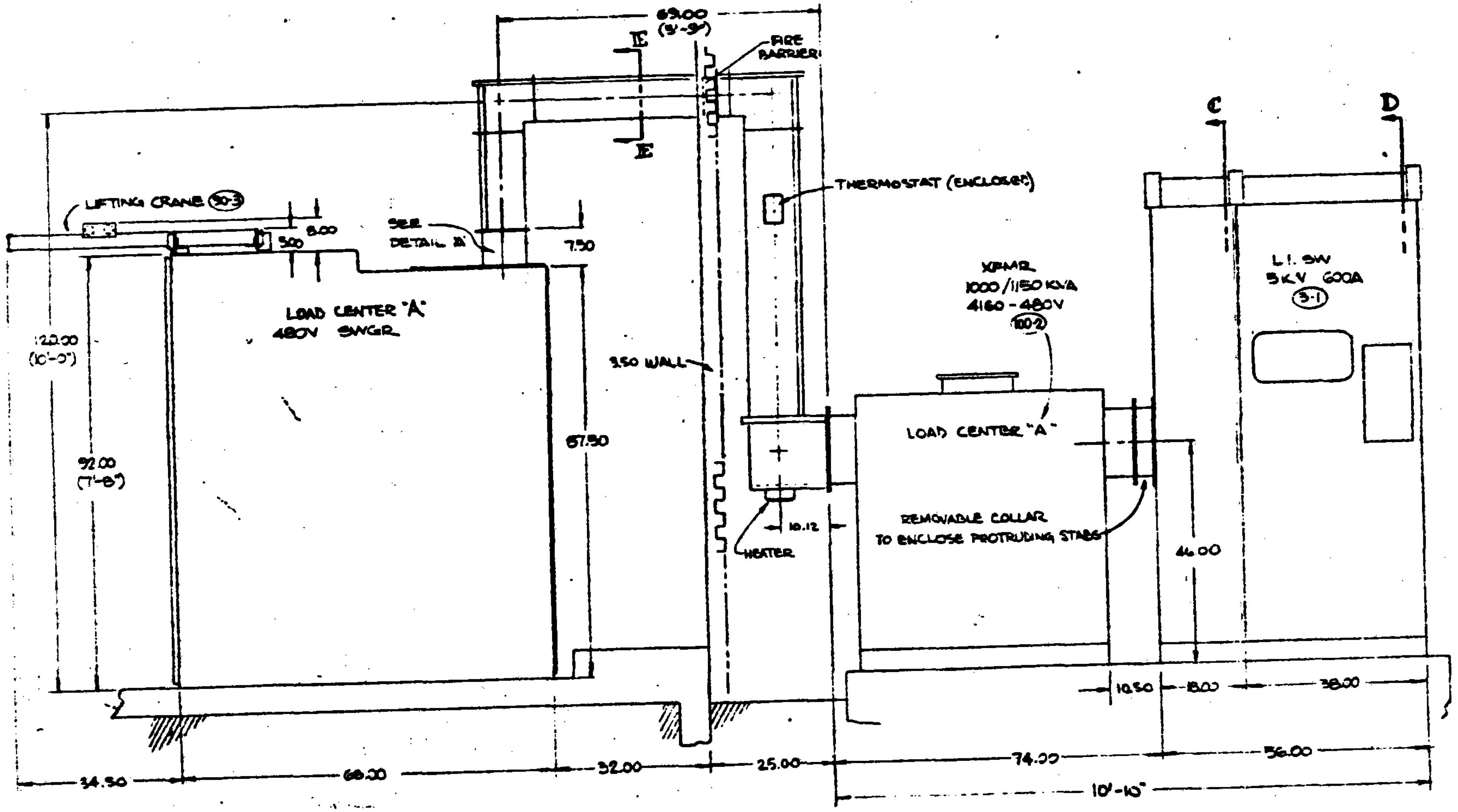

ELEVATION

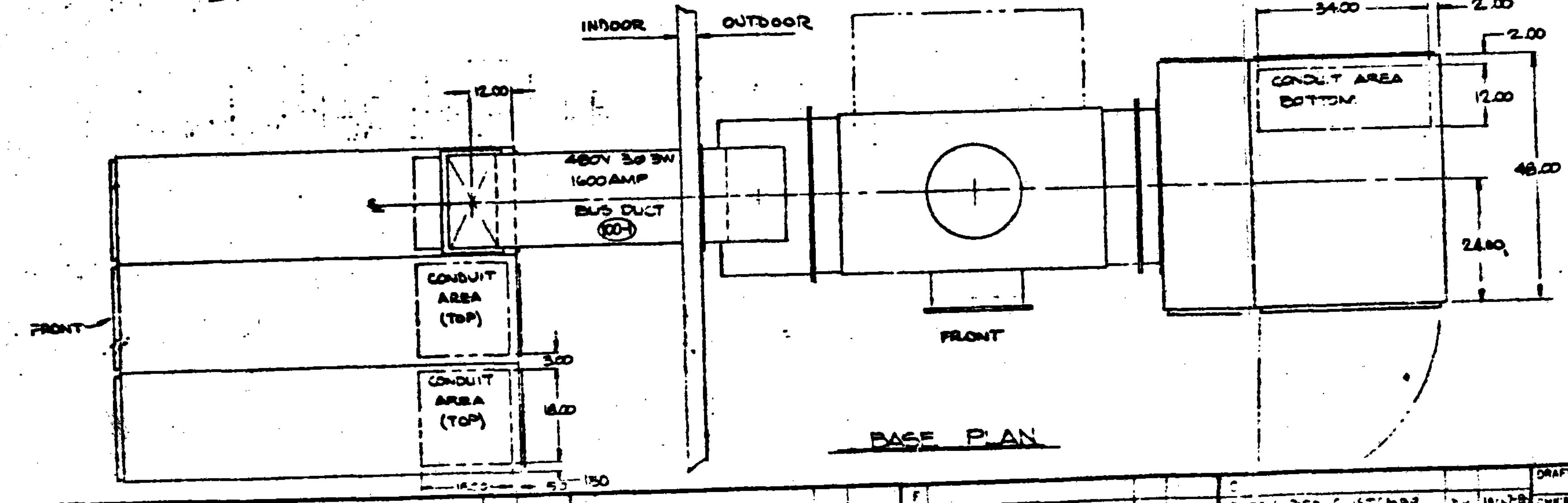

BASE PLAN

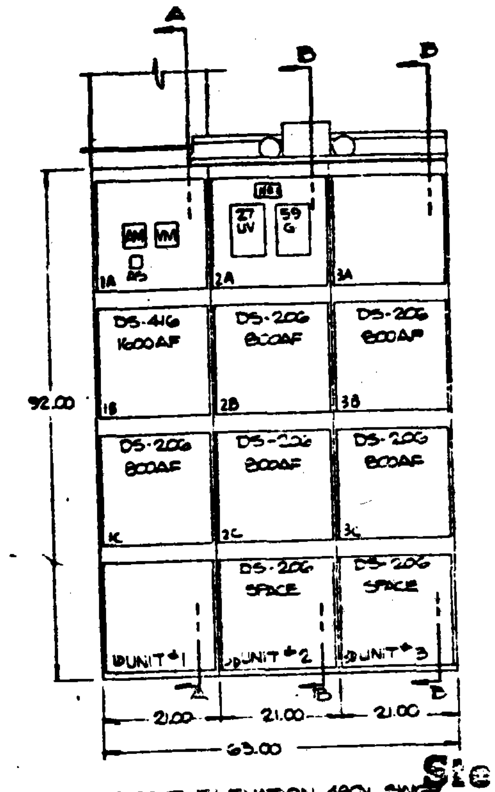

FRONT ELEVATION 480V SWGR

C. E. FILE

Stearns-Roger

C21700 MAR 23 '81

SR No F235.1 File No 060

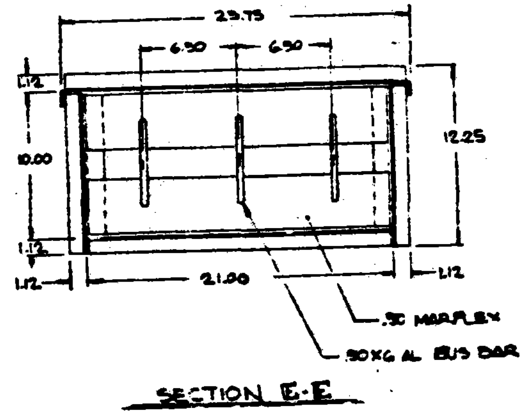

SECTION E-E

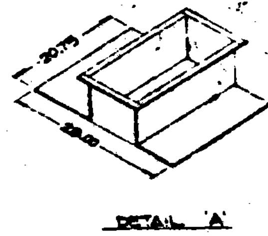

DETAIL 'A'

CERTIFIED
ABBOTT POWER CORPORATION
BY M adam
DATE

FINAL APR 1 1981

1-5049-1-1

B	[illegible] PER CUSTOMER	[illegible]
A	REVISED TO [illegible]	[illegible]
	REVISION	BY DATE

DRAFT
CHK'R
APP'D

Abbott Power Corporation
2350 STAGE ROAD · BUENA PARK · CALIFORNIA 90620

10 MWe SOLAR PILOT PLANT
DAGGETT CALIF
LOAD CENTER 'A'

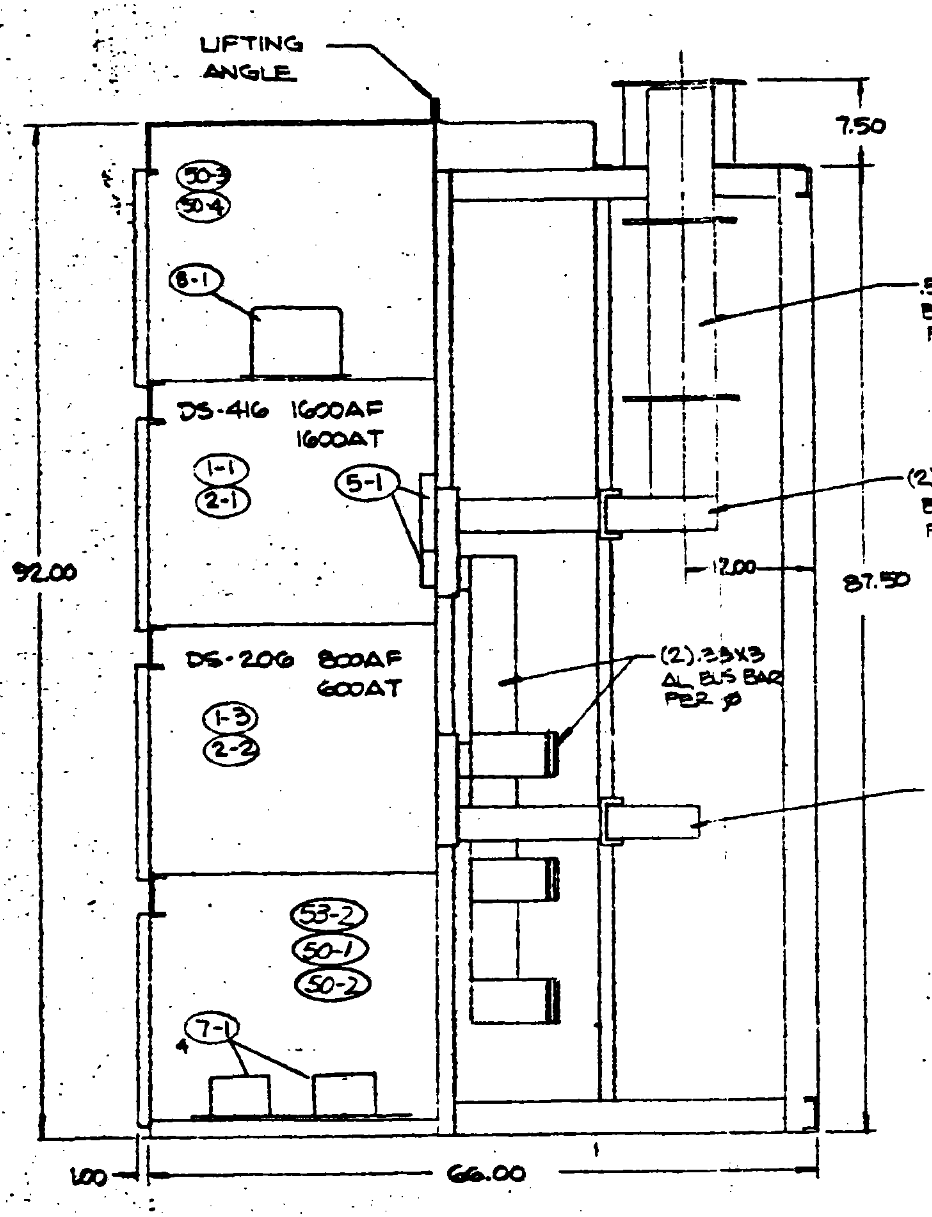

SECTION A-A

UNIT #1

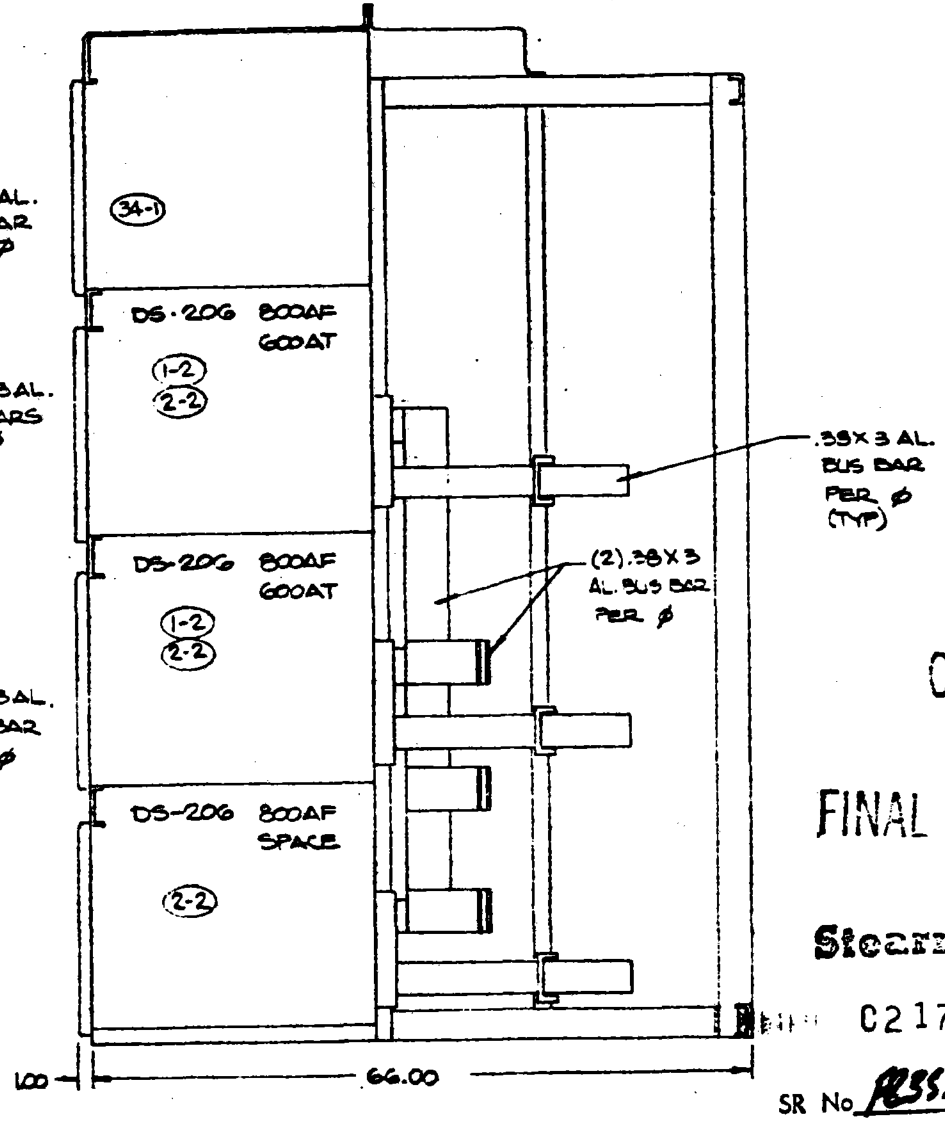

SECTION B-B

UNIT #2 & #3

C. E. FILE

FINAL APR 1 1981

Stearns-

C21700 MAR 23 '81

SR No 1855.1 File No 061

CERTIFIED
ABBOTT POWER CORPORATION
BY M. Adams
DATE 3-10-81

1-5049-1-2

F			C				
			B				
			A				
REVISION	BY	DATE		REVISION	BY	DATE	

DRAFT. LELAND DATE 5-15-80
CHK'R [illegible] DATE [illegible]
APP'D DATE

Abbott Power Corporation
7650 STAGE ROAD · BUENA PARK · CALIFORNIA 90620
A MEMBER OF NEMA

TITLE 10 MWe SOLAR PILOT PLANT
DAGGETT, CALIF.
LOAD CENTER 'A'
SECTION VIEWS 480V SWGR

PROJ. NO.: 5049
CUST. NO.: 4004CZ1700
DWG. NO.: 1-5049-1-2 PAGE OF

3.2.2-62

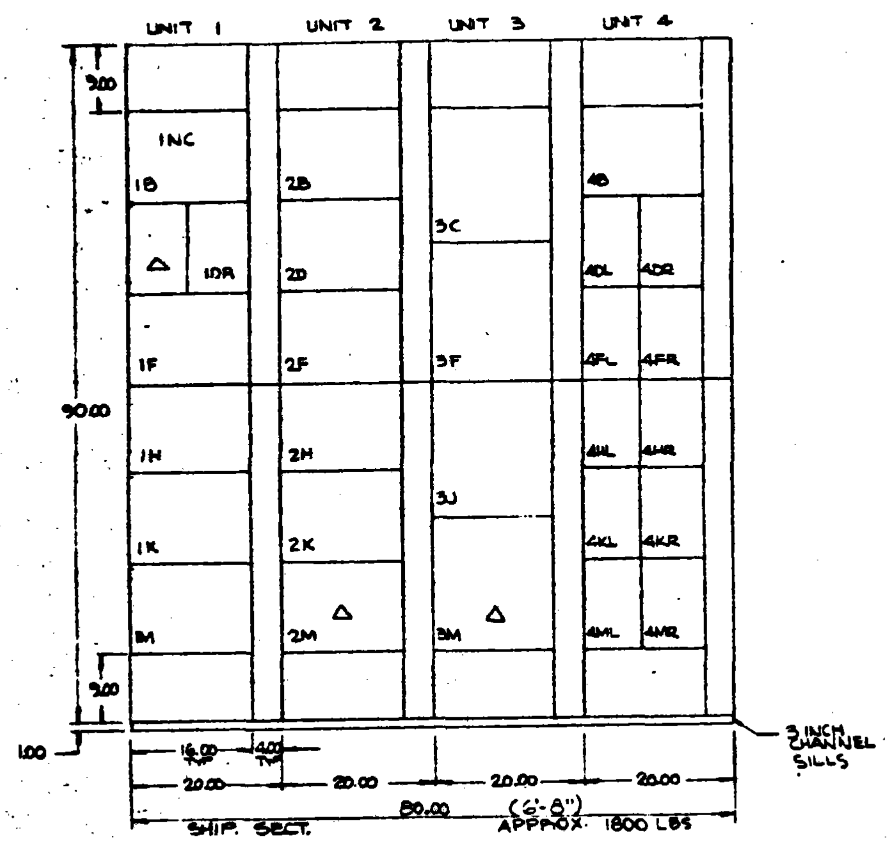

FRONT ELEVATION
MCC - B

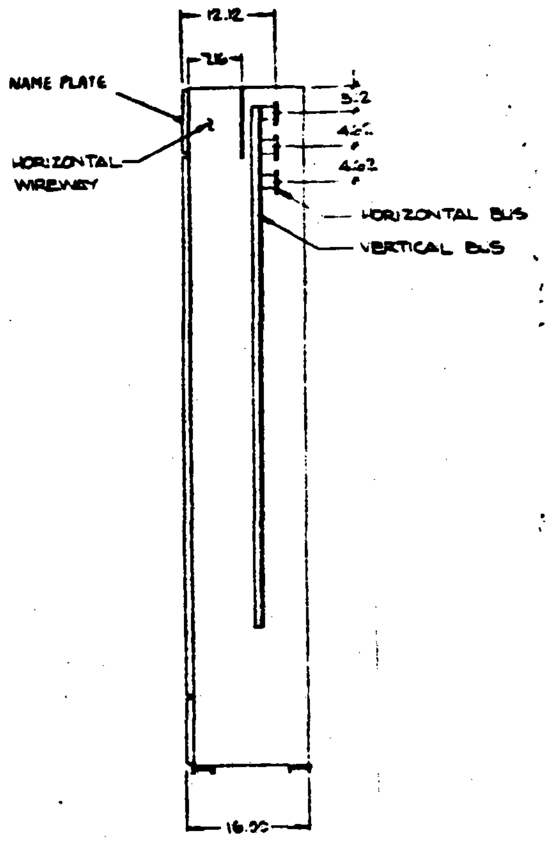

SECTION VIEW
TYP MCC-B + MCC-C

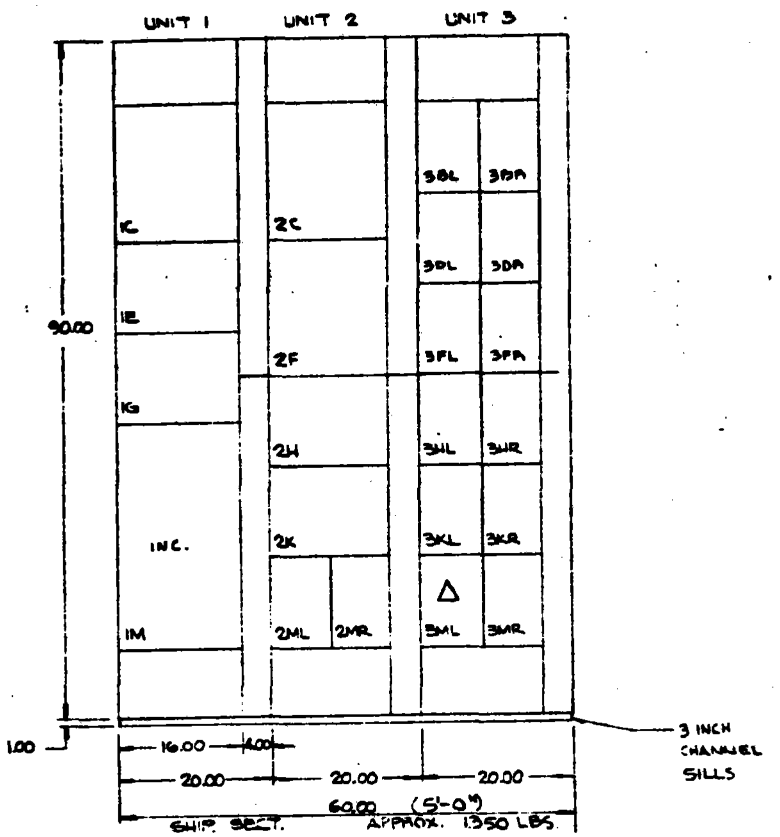

FRONT ELEVATION
MCC - C

NOTE
△ - FUTURE SPACE

C. E. FILE

Stearns-Roger

C21700 MAR 23 '81

SR No F255.1 File No 062

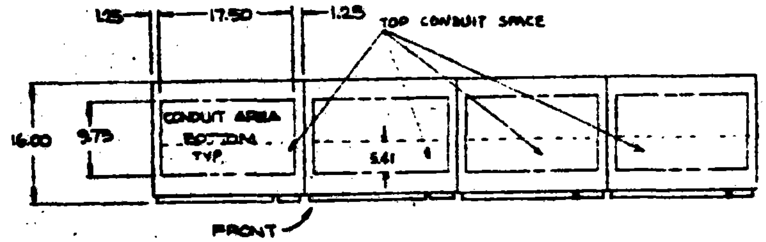

BASE PLAN

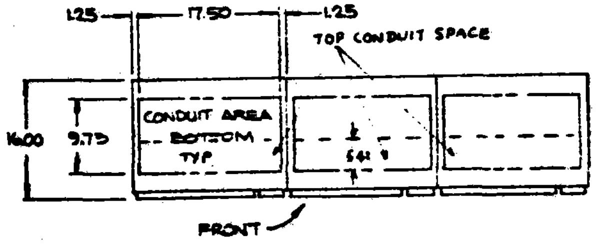

BASE PLAN

CERTIFIED
ABBOTT POWER CORPORATION
BY M Adams
DATE 3-12-81

FINAL APR 1 1981

1-5049-2-1

B	REVISED PER CUSTOMER	
A		
	REVISION	BY DATE

DRAFT
CHK'R
APP'D

Abbott Power Corporation

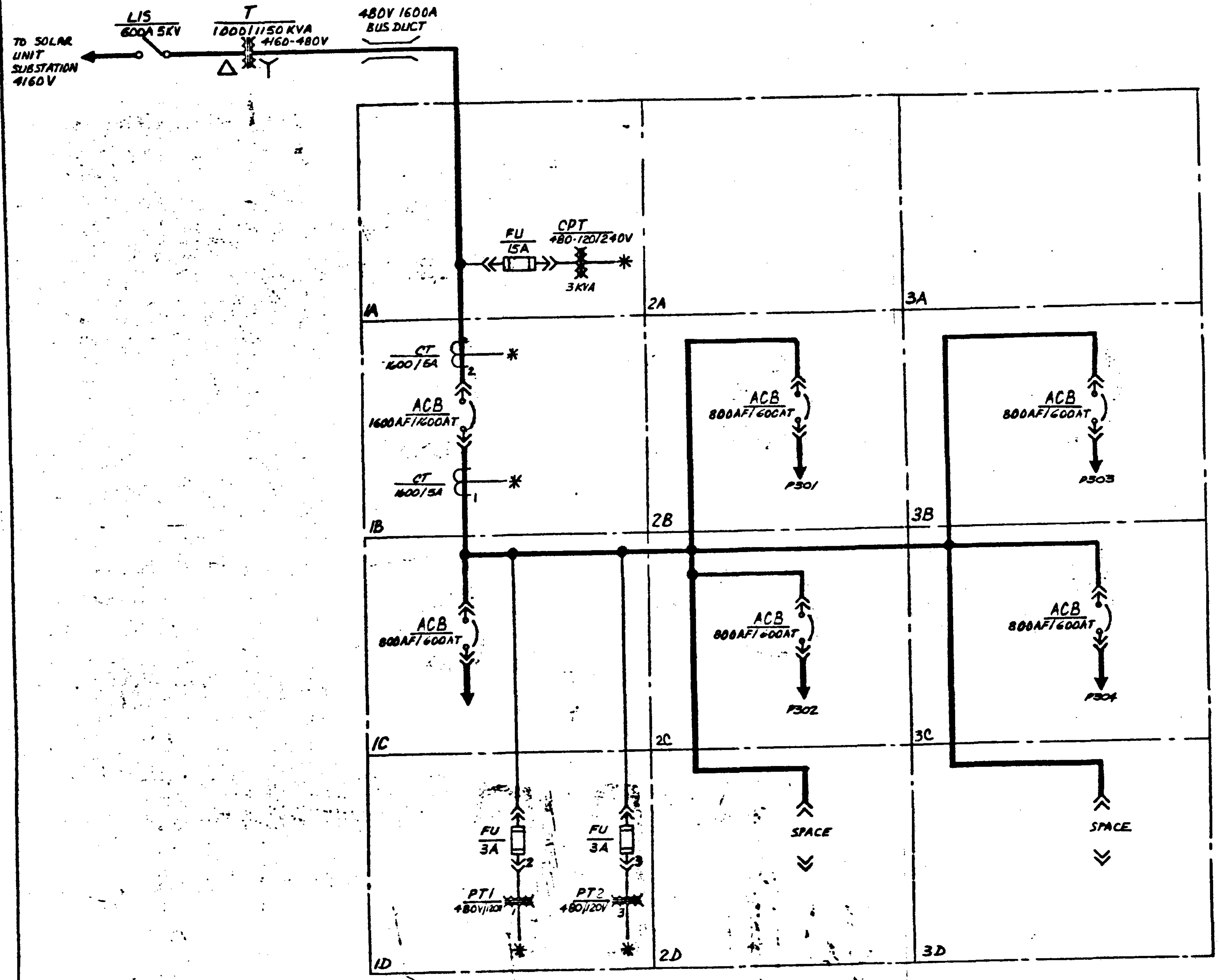

SYMBOL	DESCRIPTION
LIS	LOAD INTERRUPTER SWITCH
T	TRANSFORMER
PT	POTENTIAL TRANSFORMER
CT	CURRENT TRANSFORMER
ACB	CIRCUIT BREAKER
TB	TERMINAL BLOCK
SB	SHORTING BLOCK
ST	SHUNT TRIP
R	RESISTOR
FU	FUSE
CPT	CONTROL POWER TRANSFORMER
AS	AMMETER SWITCH
AM	AMMETER
59G	OVER VOLTAGE RELAY
27UV	UNDERVOLTAGE RELAY
VM	VOLTMETER
BA	BELL ALARM CONTACT
SH	STRIP HEATER
23	THERMOSTAT

C. E. FILE

Stearns-[illegible]

[illegible] C21700 MAR 23 '81

SR No F235.1 File No 063

* SEE THREE-LINE FOR DETAIL CONN. AND FRONT ELEVATION FOR PHYSICAL LOCATION.

FINAL APR 1 1981

CERTIFIED
ABBOTT POWER CORPORATION
BY Dr. Adams
DATE 3-12-81

2-5049-1-1

CRAFT. MYCULDEN DATE 9-11-80
CHK'R DATE
APP'D DATE

Abbott Power Corporation
7460 STAGE ROAD · BUENA PARK · CALIFORNIA 90620
A MEMBER OF [illegible]

3.2.2-64

TITLE LOAD CENTRE 'A'
10 MWe SOLAR PILOT PLANT
DAGGETT CALIF.
SINGLE LINE DIAGRAM

PROJ NO 5049
CUST NO 4004-2[illegible]
[illegible]

	BY	DATE	REVISION	BY	DATE	REVISION	BY	DATE	REVISION	BY	DATE	REVISION	BY	DATE
			L			I			F			C		
			K			H			E			B		
			J			G			D			A		

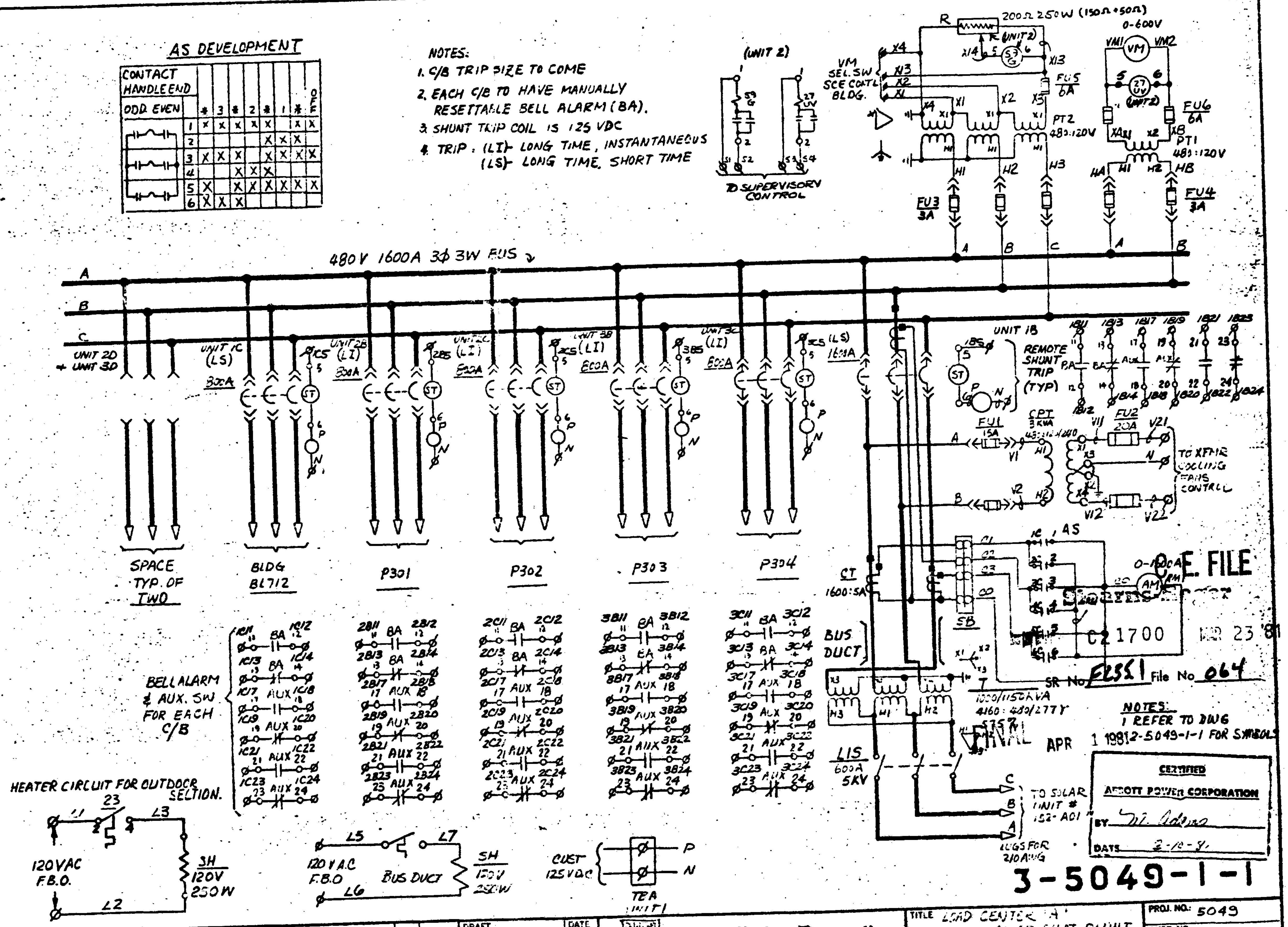

AS DEVELOPMENT

CONTACT HANDLEEND ODD EVEN		*	3	*	2	*	1	*	OFF
	1	X	X	X	X	X		X	X
	2					X	X	X	
	3	X	X	X		X	X	X	X
	4			X	X	X			
	5	X		X	X	X	X	X	X
	6	X	X	X					

NOTES:
1. C/B TRIP SIZE TO COME
2. EACH C/B TO HAVE MANUALLY RESETTABLE BELL ALARM (BA).
3. SHUNT TRIP COIL IS 125 VDC
4. TRIP : (LI)- LONG TIME, INSTANTANEOUS
(LS)- LONG TIME, SHORT TIME

NOTES:
1 REFER TO DWG 2-5049-1-1 FOR SYMBOLS

C.E. FILE
C21700
MAR 23 '81
SR No F2551 File No 064

FINAL
APR 1 1981

CERTIFIED
ABBOTT POWER CORPORATION
BY M. Adams
DATE 2-10-81

3-5049-1-1

	REVISION	BY	DATE		REVISION	BY	DATE
F				C			
E				B	REVISED PER CUST	PC	10-24-80
D				A	[illegible]	AC	[illegible]

DRAFT. VC DATE
CHK'R DATE 9.13
APP'D DATE

Abbott Power Corporation
7650 STAGE ROAD • BUENA PARK • CALIFORNIA 90620
A MEMBER OF NEMA

TITLE LOAD CENTER 'A'
10 MW SOLAR PILOT PLANT
DAGGETT CALIF
3-LINE DIAGRAM

PROJ. NO.: 5049
CUST. NO.: 4004CZ1700
DWG. NO.: 3-5049-1-1 PAGE __ OF __

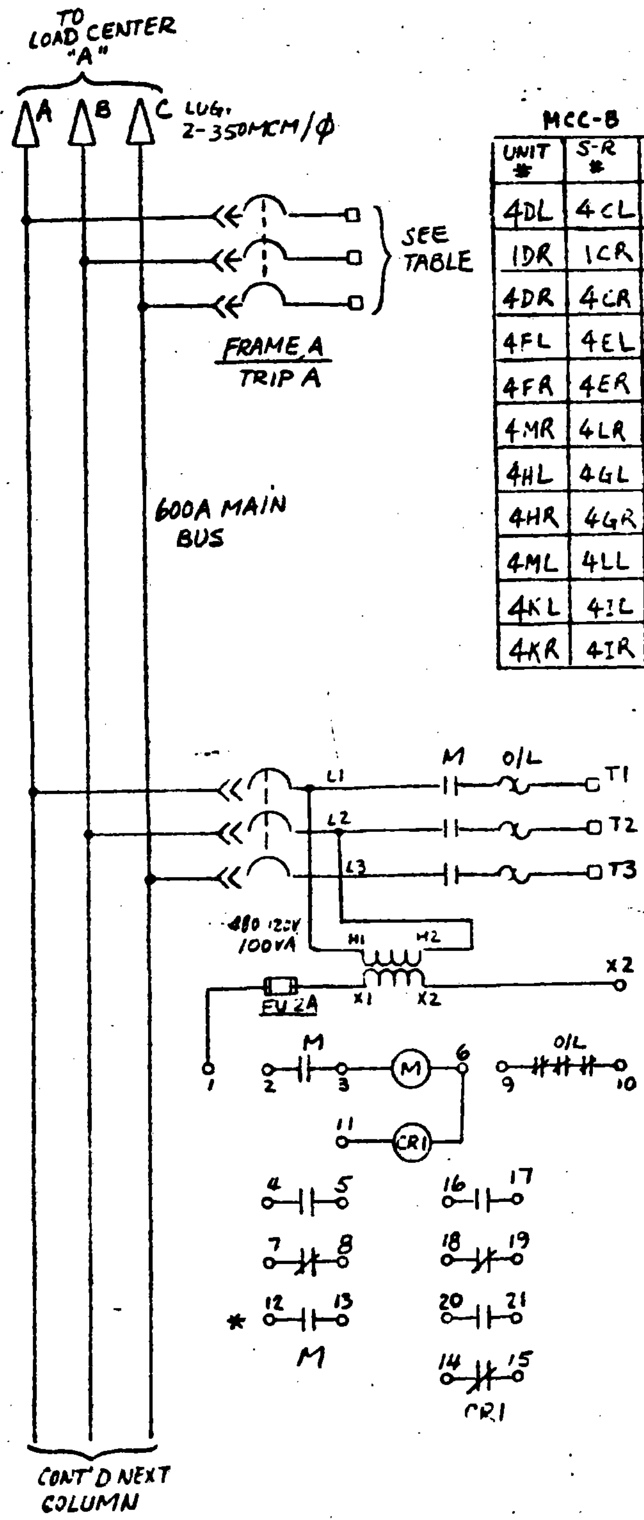

MCC-B

UNIT #	S-R #	CIRCUIT #	FRAME, A	TRIP, A
4DL	4CL	P-305	100A	30A
1DR	1CR	P718		15
4DR	4CR	MCC#1		90
4FL	4EL	MCC#2		90
4FR	4ER	MCC#3		90
4MR	4LR	RECEPTACLE RECEIVER		70
4HL	4GL	LP4		50
4HR	4GR	PP2 XFMR		50
4ML	4LL	RECEPTACLE TS SKID		70
4KL	4IL	P717		15
4KR	4IR	OIL WATER SEPARATOR		70

MCC-B

UNIT #	SR #	CIRCUIT #	C/B TYPE	TRIP A	STR SIZE	
1M	1L	P-307	MCP	3	1	
2H	2G	SPARE		15	1	
2K	2J	SPARE		15	1	
1F	1E	SPARE		30	1	*
1H	1G	SPARE		30	1	*
4B	4A	SPARE		3	1	*
2B	2A	SP-701		15	1	*
2D	2C	P-306		3	1	*
2F	2E	SPARE		7	1	*
1K	1J	SPARE		3	1	*

* FOR THESE UNITS, OMIT CR1 & ITS CONTACTS AND CONTACT 12-13

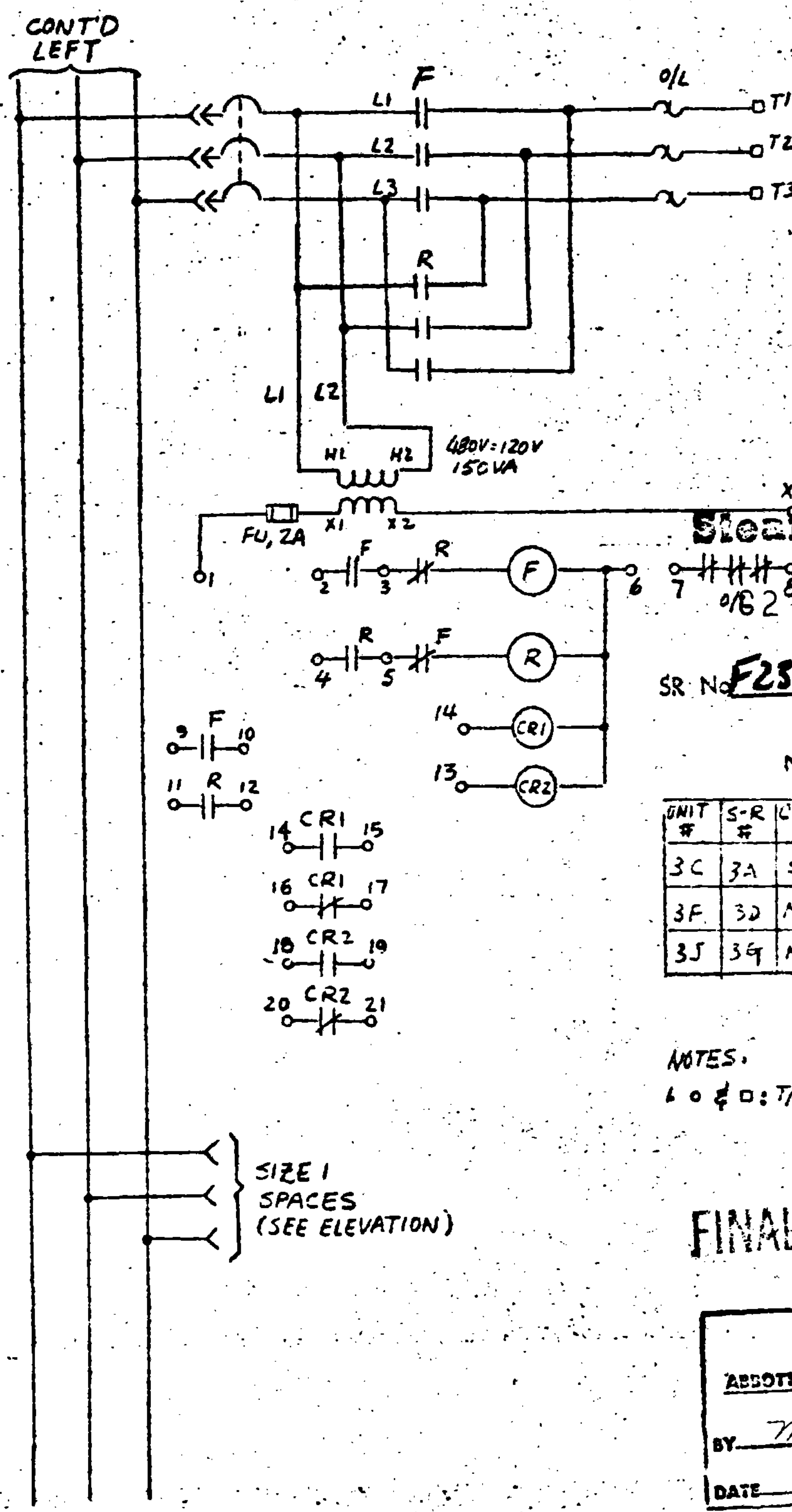

C. E. FILE

Stearns-Roger

C621700 MAR 23 '81

SR No F255.1 File No 065

MCC - B

UNIT #	S-R #	CIRCUIT #	C/B TYPE	TRIP A	STR SIZE
3C	3A	SPARE	MCP	3	1R
3F	3D	MOV-1030		3	1R
3J	3G	MOV-1031		3	1R

NOTES.

ϕ o & ▫ : T/B IN OR NEAR WIRE GUTTERS

FINAL APR 1 1981

CERTIFIED
ABBOTT POWER CORPORATION
BY M. Adams
DATE 4-10-81

3-5049-2-1

F				C				DRAFT. VC	DATE	
E				B	REVISED FOR CUSTOMER	AC	11/5/80	CHK'R VC	DATE	
D				A	REARRANGE UNIT #	AC	9/17/80	APP'D	DATE	
	REVISION	BY	DATE		REVISION	BY	DATE			

Abbott Power Corporation
7650 STAGE ROAD · BUENA PARK · CALIFORNIA 90620
A MEMBER OF NEMA

TITLE MCC-B
10 MWe SOLAR PILOT PLANT
DAGGETT, CALIF.
3-LINE SCHEMATIC DIAGRAM

PROJ. NO.: 5049
CUST. NO.: 4024 C21700
DWG. NO.: 3-5049-2-1 PAGE OF

3.2.2-66

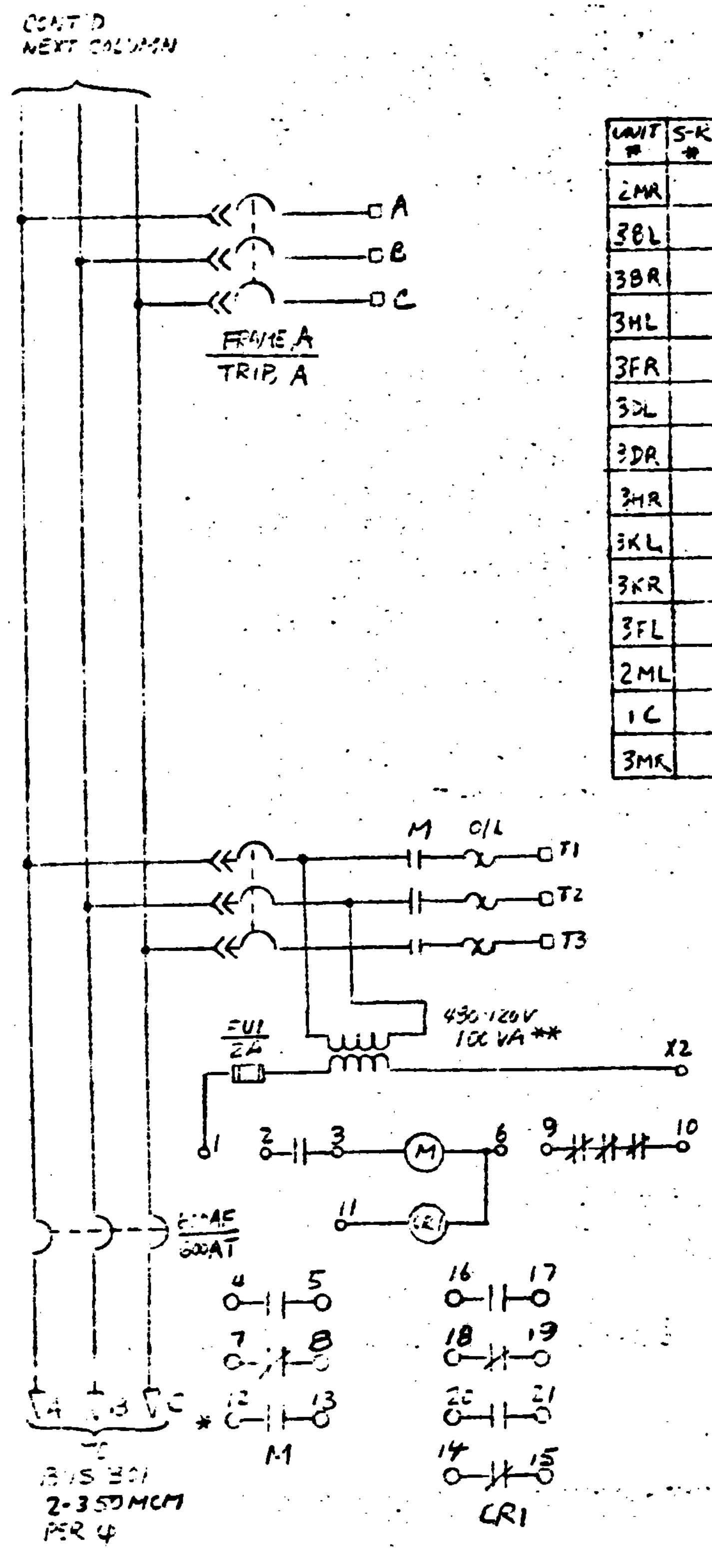

MCC-C

UNIT #	S-K #	CIRCUIT #	FRAME A	TRIP. A
2MR		LP3 XFMR	100A	70 A
3BL		SPARE		50
3BR		PP3 XFMR		50
3HL		P7:E		15
3FR		EF2 EF3		15
3DL		SPARE		30
3DR				15
3HR				15
3KL				15
3KR				30
3FL				30
2ML		SPARE		50
1C		P-725	225	225
3MR		P-707	100	15

MCC-C

UNIT #	SR #	CIRCUIT #	C/B TYPE	TRIP SIZE	STR SIZE	
2K	2J	P-710	MCP	15A	1	*
2C	2A	P-703		100	3	*
2F	2D	P-704		100	3	*
1E	1D	SPARE		15	1	*
2H	2G			7	1	
1G	1F			15	1	

* FOR THESE UNITS OMIT CR1 & ITS CONTACTS AND CONTACT 12-13

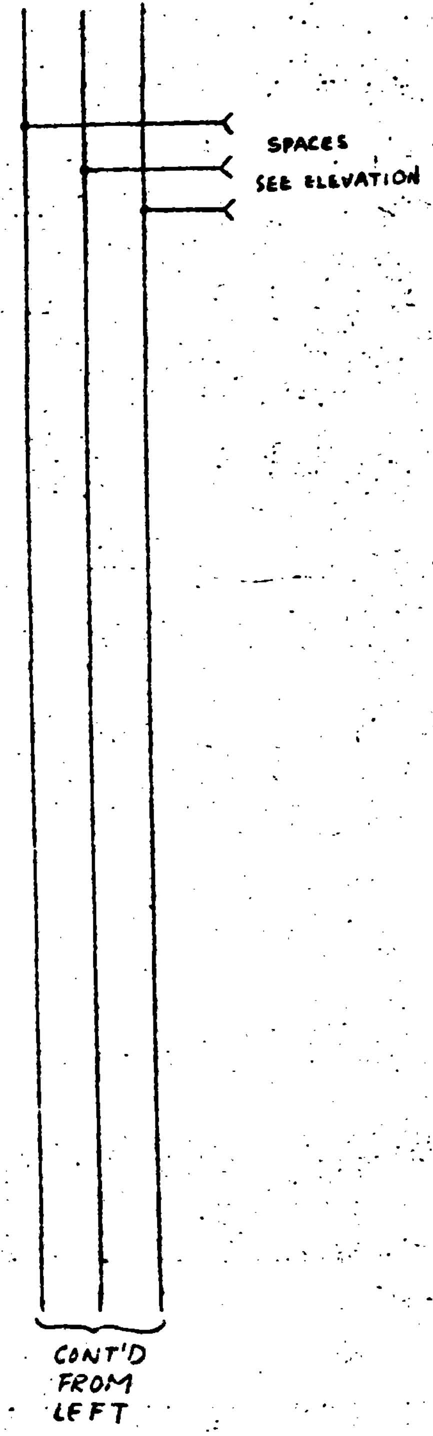

C. E. FILE

FINAL APR 1 1981

Stearns-Roger

C21700 MAR 23 '81

SR No F235.1 File No 066

CERTIFIED
ABBOTT POWER CORPORATION
BY M. Adams
DATE 3-10-81

3-5049-2-2

DRAFT C
CHK
DATE

Abbott Power Corporation
2120 STAGE ROAD · BUENA PARK · CALIFORNIA 90620
A MEMBER OF NEMA

TITLE MCC-C
10 MWe SOLAR PILOT PLANT
DAGGET, CALIF
3-LINE SCHEMATIC DIAGRAM

PROJ. NO.: 5049
CUST. NO.: C994C21700
DWG. NO.: 3-5049-2-2 PAGE OF

3.2.2-67

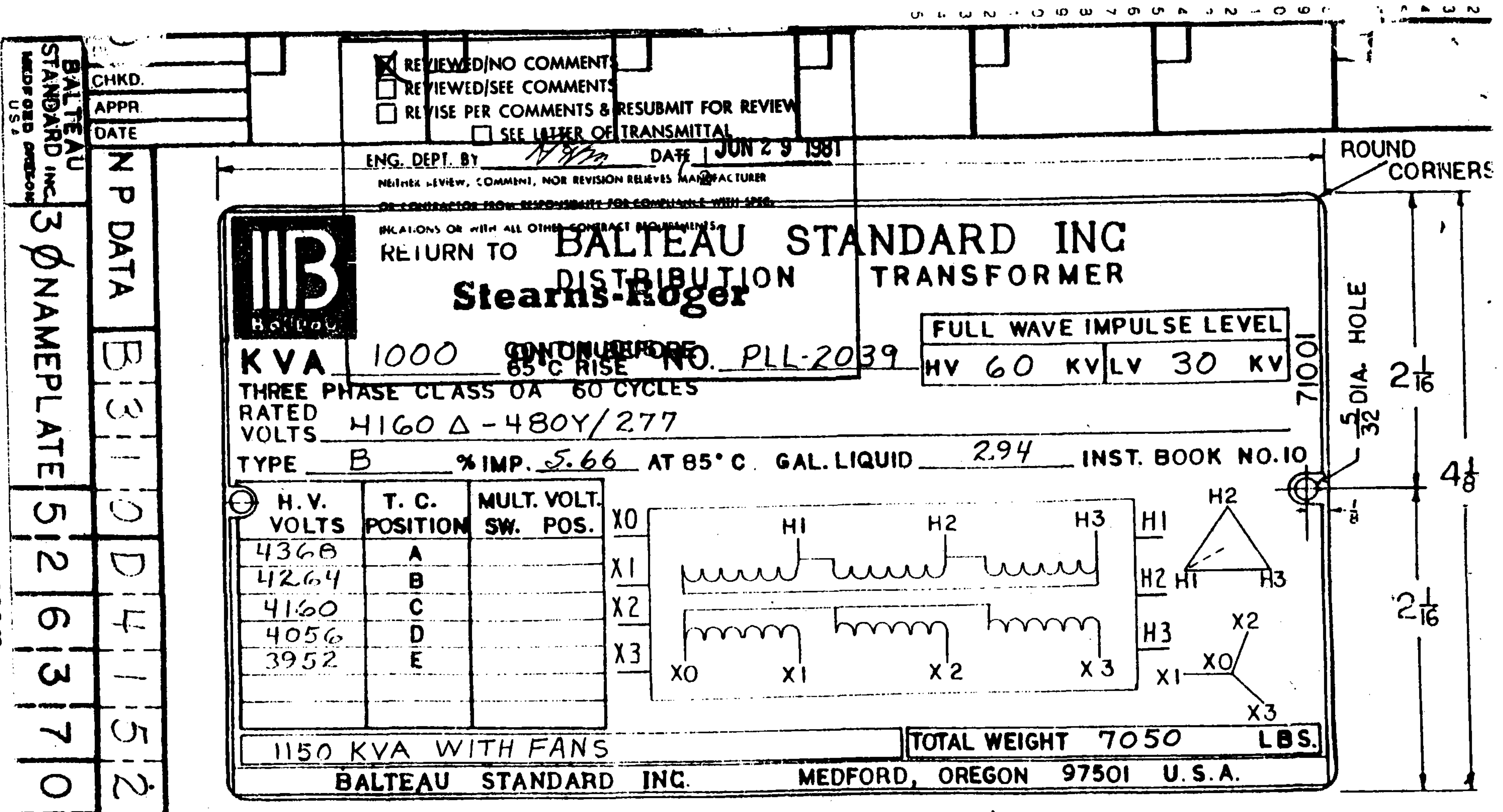

BALTEAU STANDARD INC. MEDFORD OREGON U.S.A.

CHKD.

APPR.

DATE

N P DATA

3 Ø NAMEPLATE

B 3 1 0 D 4 1 5 2 5 P X 0 0 3 N

5 2 6 3 7 0 0 1 0 0 1 0 1

3.2.2-68

☒ REVIEWED/NO COMMENTS
☐ REVIEWED/SEE COMMENTS
☐ REVISE PER COMMENTS & RESUBMIT FOR REVIEW
☐ SEE LETTER OF TRANSMITTAL

ENG. DEPT. BY ___ DATE JUN 29 1981

NEITHER REVIEW, COMMENT, NOR REVISION RELIEVES MANUFACTURER OR CONTRACTOR FROM RESPONSIBILITY FOR COMPLIANCE WITH SPECIFICATIONS OR WITH ALL OTHER CONTRACT REQUIREMENTS.

RETURN TO **Stearns-Roger**

BALTEAU STANDARD INC

DISTRIBUTION TRANSFORMER

KVA 1000 CONTINUOUS 65°C RISE SERIAL NO. PLL-2039

FULL WAVE IMPULSE LEVEL	
HV 60 KV	LV 30 KV

THREE PHASE CLASS OA 60 CYCLES

RATED VOLTS 4160 Δ - 480Y/277

TYPE B % IMP. 5.66 AT 85° C. GAL. LIQUID 294 INST. BOOK NO. 10

H. V. VOLTS	T. C. POSITION	MULT. VOLT. SW. POS.
4368	A	
4264	B	
4160	C	
4056	D	
3952	E	

1150 KVA WITH FANS

TOTAL WEIGHT 7050 LBS.

BALTEAU STANDARD INC. MEDFORD, OREGON 97501 U.S.A.

DWG. FULL SIZE ~ MATERIAL: (.010) STAINLESS STEEL ~ COLOR: (LETTER) PAD MT GREEN

CUST: ABBOTT POWER CORP.

P.O. #: 5049-P4

P.O. #: PB 92133

KVA: 1000

H.V.: 4160 Δ

L.V.: 480Y/277

TAPS: 2 ± 2 1/2 %

Certified as True Data by Mike Dickinson
Mike Dickinson
Sr. Design Engineer

Date 6/5/81

92133

Stearns-Roger

FINAL JUN 29 1981

C. E. FILE

FILE C21700-96 JUN 19 '81

S-R No. F235.1 File No. 68

2 6 3 7 0 0 0 1 0 2 0 2

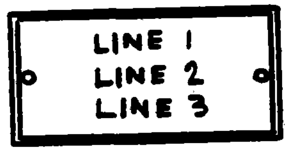

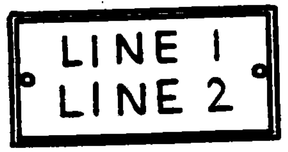

NO.	QTY	LINE 1	LINE 2	LINE 3	LET'S	SIZE
1	1	LOAD CENTER - A	480V 1600A		7/16"	5"X3"
1A	1	C.P.T.	COMPARTMENT		1/8"	3"X1"
1B	1	MAIN BREAKER	1600AF/1600AT		1/8"	3"X1"
1C	1	FEEDER	800AF/600AT	MCC-B	1/8"	3"X1"
1D	1	P.T.	COMPARTMENT		1/8"	3"X1"
2A	1					
2B	1	FEEDER	800AF/600AT	P301	1/8"	3"X1"
2C	1	FEEDER	800AF/600AT	P302	1/8"	3"X1"
2D	1	SPACE			1/8"	3"X1"
3A	1					
3B	1	FEEDER	800AF/600AT	P303	1/8"	3"X1"
3C	1	FEEDER	800AF/600AT	P304	1/8"	3"X1"
#D	!	SPACE			1/8"	3"X1"

C. E FILE

Stearns-Roger
[illegible] C21700 MAR 23 '81
SR No F2341 File No 674

FINAL APR 1 1981

	REVISION	BY	DATE
B			
A			

TITLE: LOAD CENTER A
ADDRESS: 10 M We SOLAR PILOT PLANT
DAGGETT, CA.

DR. BY: AC/MA
DATE 11/6/80
CHK. BY:
DATE
APP'D. BY:
PROJ. NO.: 5049
CUST. NO.: 4004C21700
DWG. NO.: PAGE 1 OF 1
NAMEPLATE SCHEDULE
5049-NP

Abbott Power Corporation
7650 STAGE ROAD • BUENA PARK • CALIFORNIA 90620
A MEMBER OF NEMA

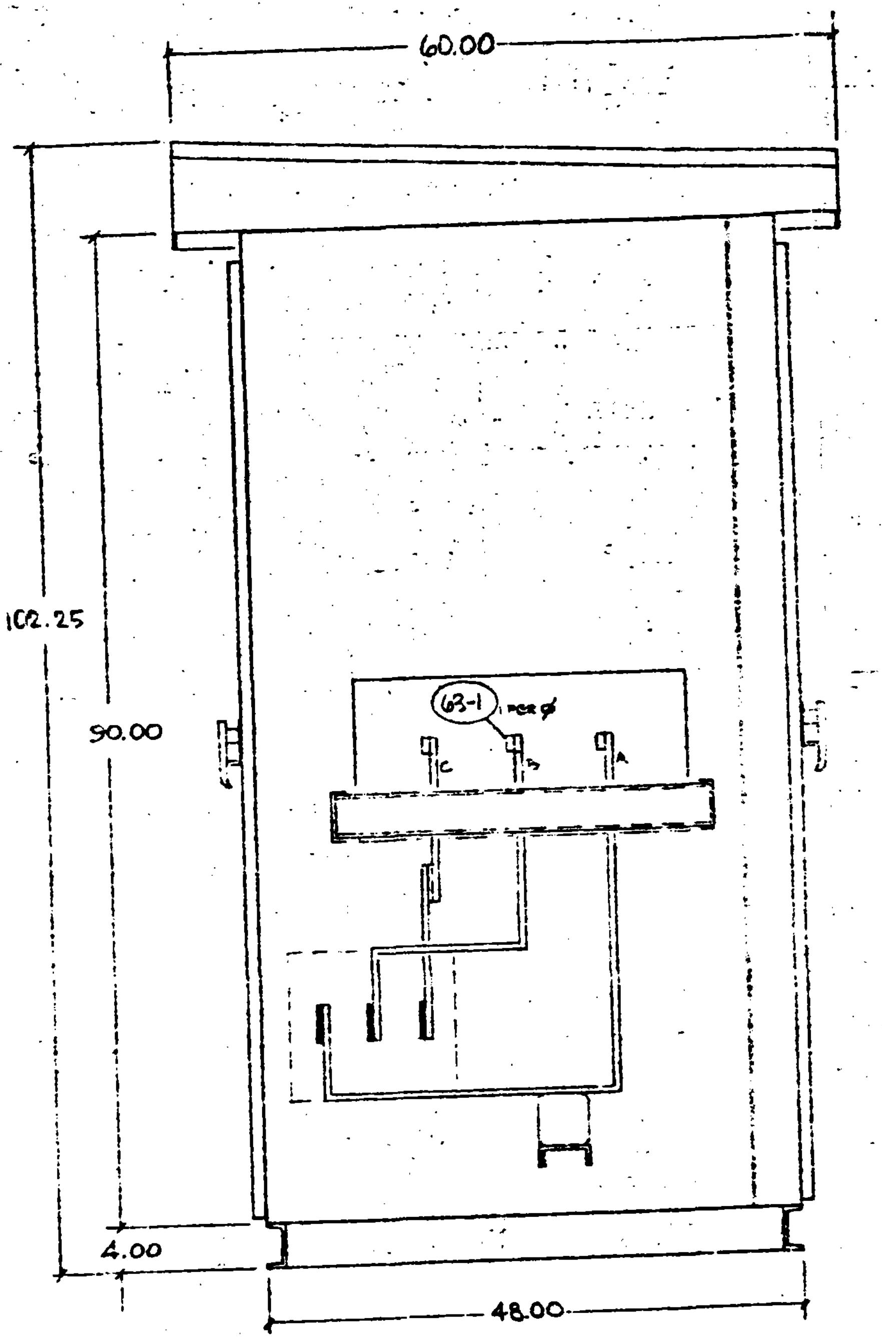

SECTION C-C

TRANSITION

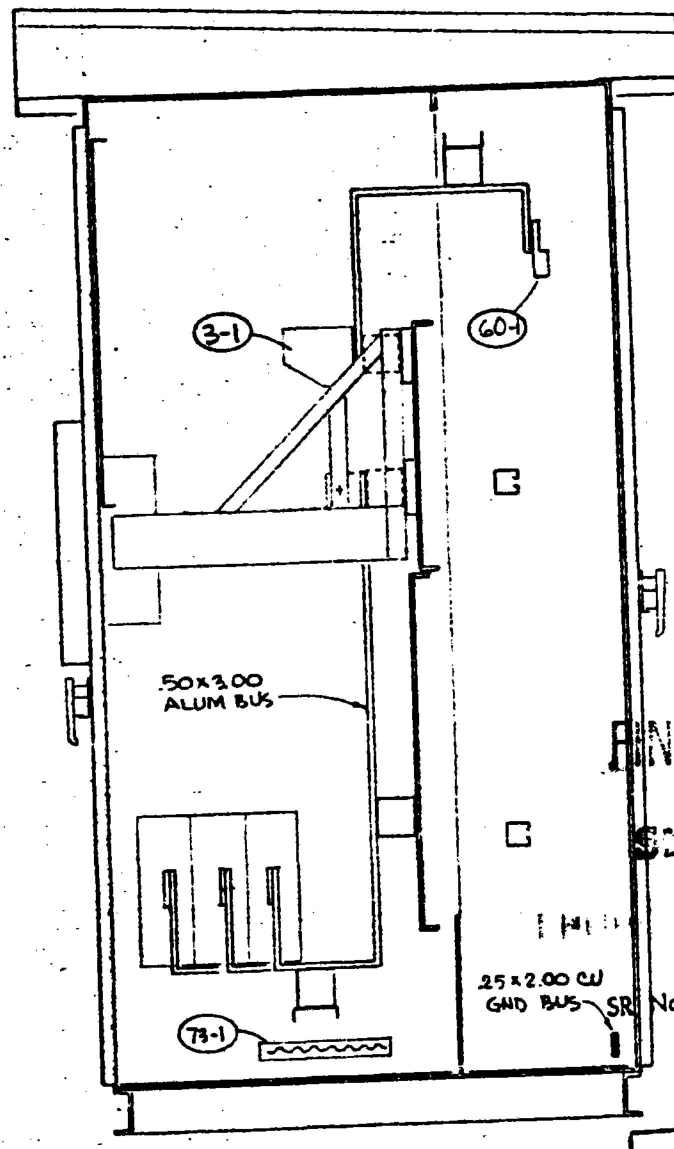

SECTION D-D

LOAD INTERRUPTER

C. E. FILE

FINAL APR 1 1981

Stearns-Roger

C21700. MAR 23 '81

SR No F235.1 File No 075

CERTIFIED
ABBOTT POWER CORPORATION
BY M. Adams
DATE 3-10-81

1-5049-1-3

C				DRAFT. DV	DATE
B				CHK'D	DATE
A	[illegible] TO TRANSFORMER	DV	[illegible]	APP'D	DATE
	REVISION	BY	DATE		

Abbott Power Corporation
7650 STAGE ROAD · BUENA PARK · CALIFORNIA 90620
A MEMBER OF NEMA

TITLE 10MWe SOLAR PILOT PLANT
DAGGETT, CALIF.
LOAD CENTER "A"
SECTION VIEWS 5KV SWGR.

PROJ. NO.: 5049
CUST. NO.: 4004CZ1700
DWG. NO.: 1-5049-1-3 PAGE OF

3.2.2-70

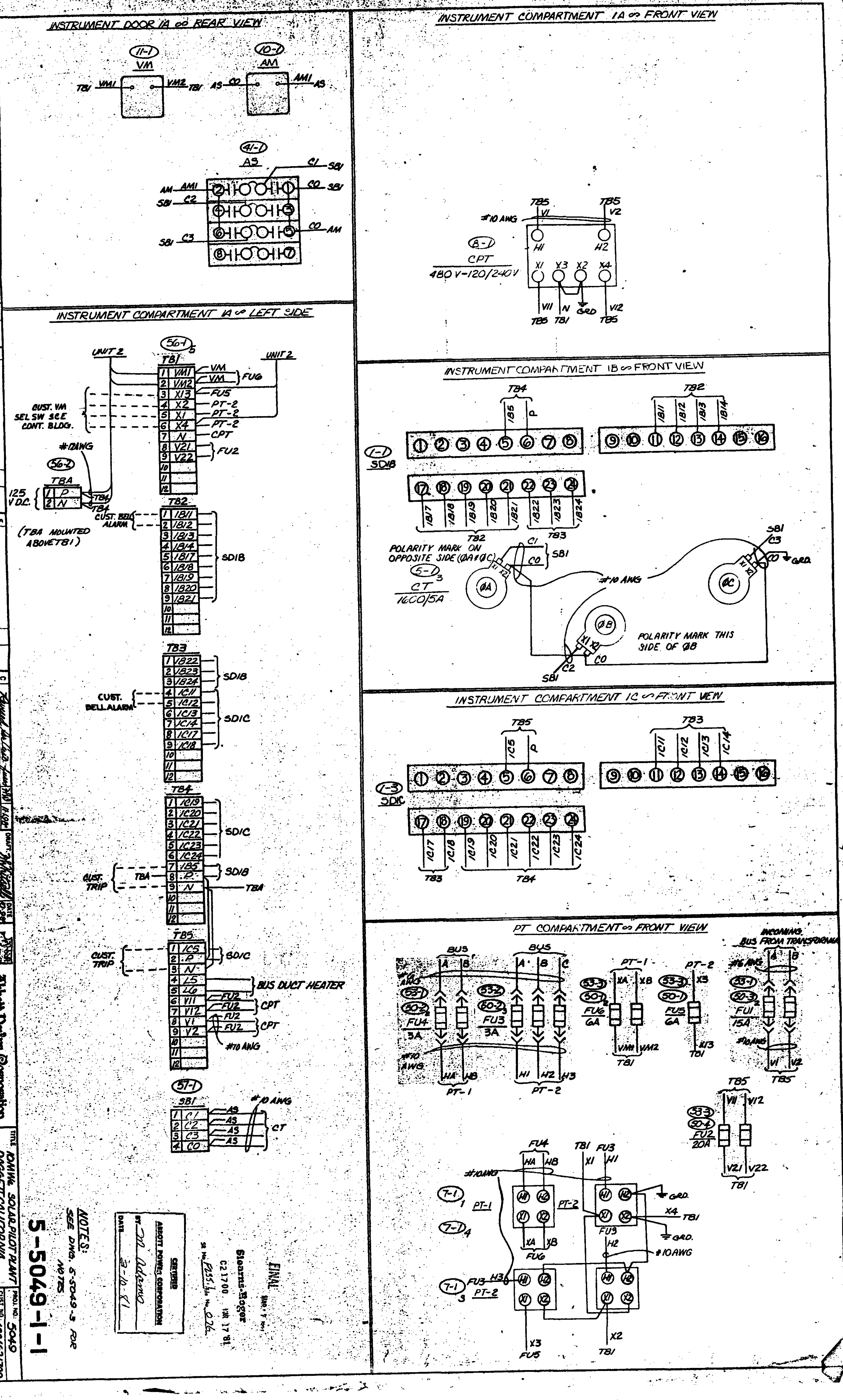

TITLE 10MWe SOLAR PILOT PLANT
DAGGETT CALIFORNIA
LOAD CENTER 'A'
WIRING DIAGRAM ∞ UNIT #1

PROJ. NO. 5049
CUST. NO. 40046Q1700
DWG NO. 5-5049-1-1

Abbott Power Corporation

5-5049-1-1

NOTES:
SEE DWG. 5-5049-3 FOR NOTES

CERTIFIED
ABBOTT POWER CORPORATION
BY M. Adamo
DATE 3-10-81

FINAL
Stearns-Roger
C21700 MAR 17 '81

A REVISED PER ENG.

INSTRUMENT DOOR 2A ~ REAR VIEW

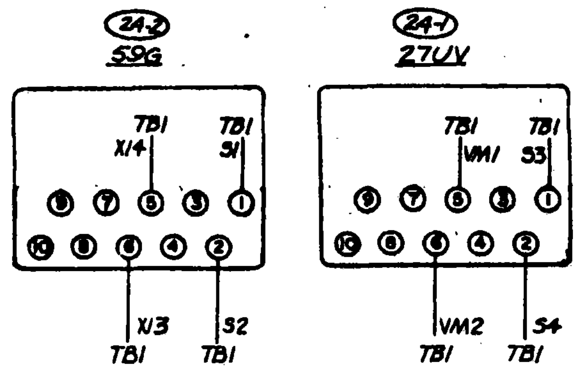

INSTRUMENT COMPARTMENT 2A ~ FRONT VIEW

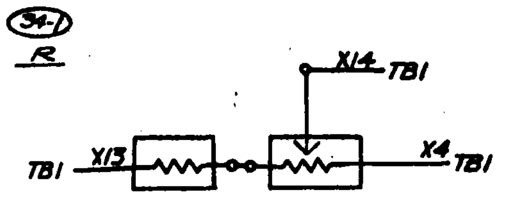

INSTRUMENT COMPARTMENT 2A ~ LEFT SIDE

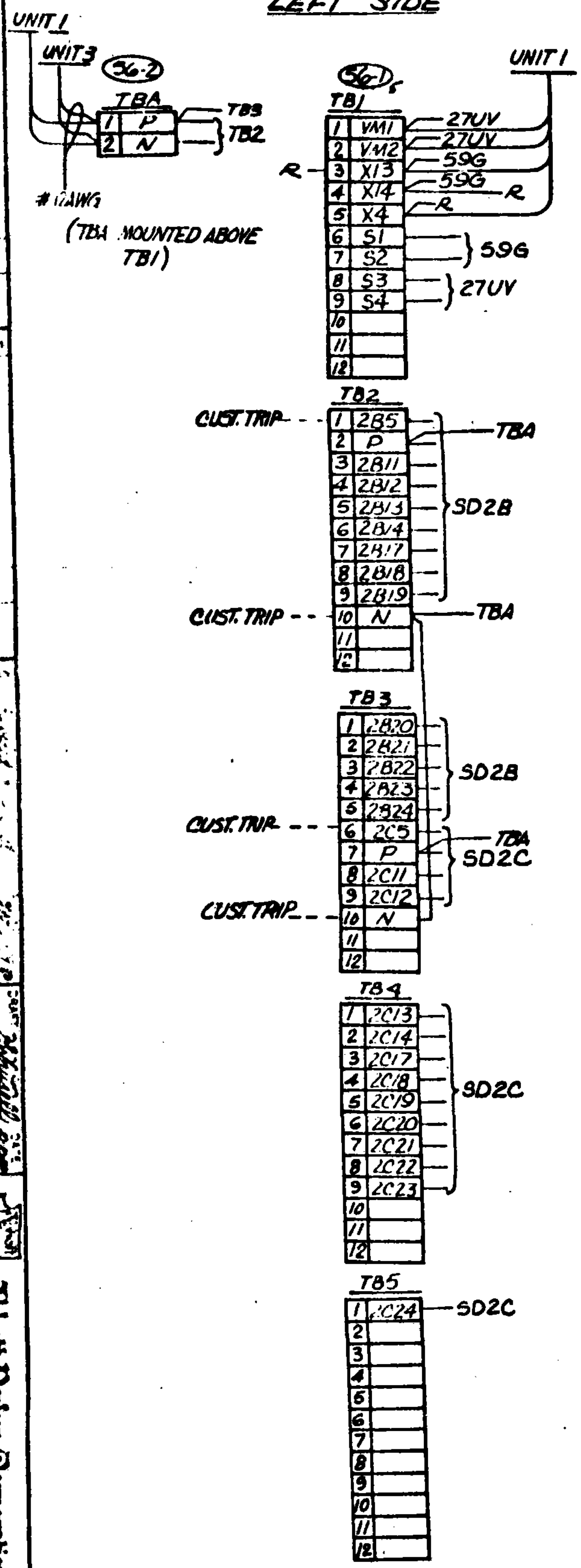

BREAKER COMPARTMENT 2B ~ FRONT VIEW

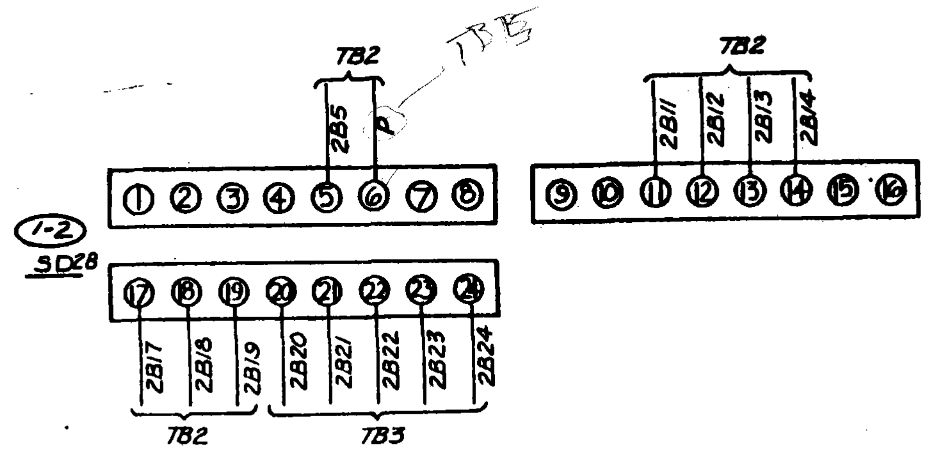

BREAKER COMPARTMENT 2C ~ FRONT VIEW

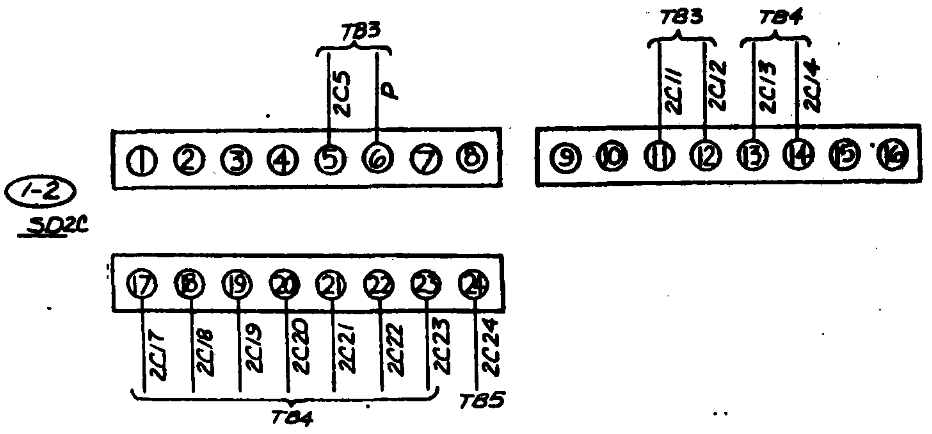

BREAKER COMPARTMENT 2D ~ FRONT VIEW

C. E. FILE

C21700 MAR 23 '81

SR No F2351 File No 077

C. E. FILE

FINAL APR 1 1981

ABBOTT POWER CORPORATION
DATE 3-10-81

NOTES:
SEE DWG. 5-5049-3 FOR NOTES.

5-5049-1-2

Abbott Power Corporation

10MWe SOLAR PILOT PLANT
DAGGETT, CALIFORNIA
LOAD CENTRE 'A'
WIRING DIAGRAM ~ UNIT 2

PROJ. NO 5049

3-22-72

INSTRUMENT COMPARTMENT 3A — LEFT SIDE

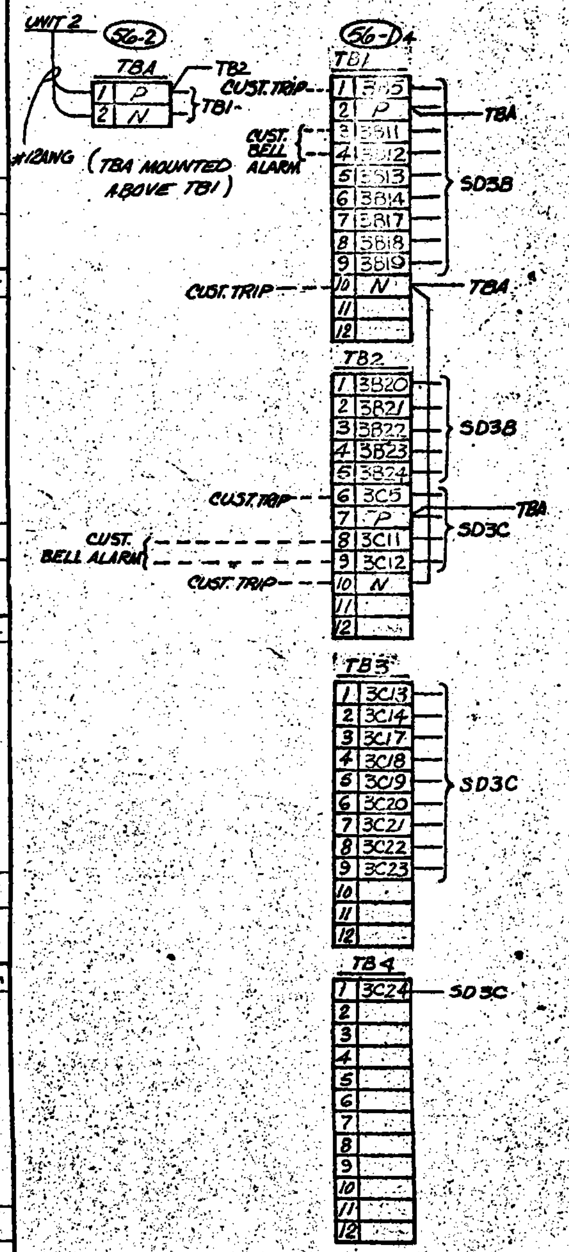

INSTRUMENT COMPARTMENT 3A — FRONT VIEW

BREAKER COMPARTMENT 3B — FRONT VIEW

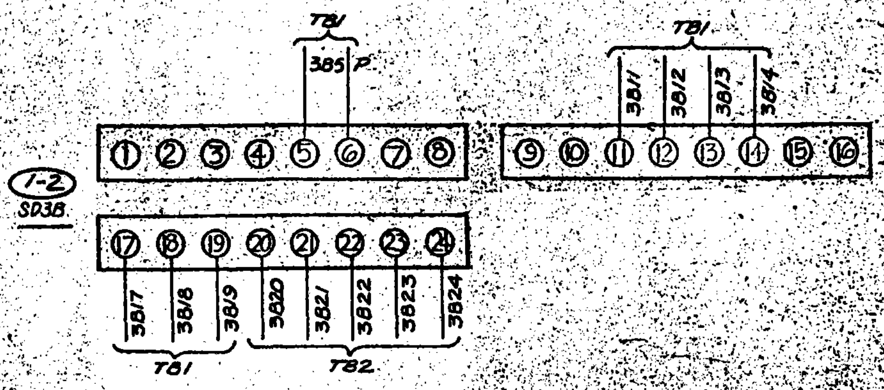

BREAKER COMPARTMENT 3C — FRONT VIEW

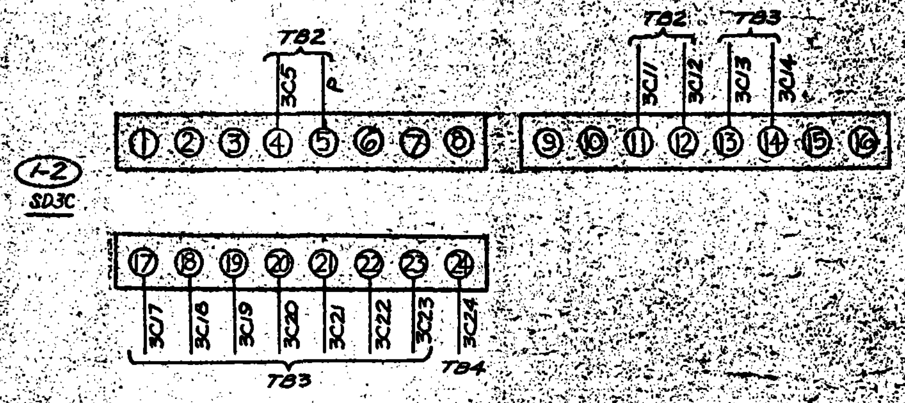

BREAKER COMPARTMENT 3D — FRONT VIEW

NOTES:

1.) REFER TO BILL OF MATERIAL 5049-1 AND DWGS. 1-5049-1-1 THRU 3-5049-1-1

2.) ◯ DENOTES ITEM NO. ON BILL OF MATERIAL.

3.) USE RING TONGUE INSULATED TERMINAL LUGS TO TERMINATE ALL CONTROL WIRING.

4.) HINGE WIRE TO BE 41 STR., USE SPIRAL WIRE PROTECTORS.

5.) CONTROL WIRING TO BE TYPE SIS, 600V, 90°C, SIZE #14 AWG.

6.) CT SECONDARY WIRING TO BE #10 AWG.

7.) [illegible] DENOTES CIRCUIT [illegible] SECONDARY DISCONNECT.

8.) ALL GROUND WIRE TO BE [illegible] AWG, TYPE SIS.

9.) FUSE BLOCKS, CS'S, [illegible] AND RELAYS NOT TO BE MOUNTED OVER 6 1/2 FEET HIGH.

FINAL
MAR 17 '81

Stearns-Roger
C21700 MAR 17 '81
No. F2356 No. 078

CERTIFIED
ABBOTT POWER CORPORATION
BY M. Adams
DATE 3-10-81

	REVISION	BY	DATE
A	REVISED PER ENG.		
B	Revised per Cust.		
C	Revised per Cust.		
D	Revised per Cust.		

Abbott Power Corporation
7850 STAGE ROAD • BUENA PARK • CALIFORNIA 90620

TITLE 10MWe SOLAR PILOT PLANT
DAGGETT, CALIFORNIA
LOAD CENTRE 'A'
WIRING DIAGRAM — UNIT 3

PROJ. NO. 5049
CUST. NO. 40046-21700
DWG. NO. 5-5049-1-3

5-5049-1-3

HEATER WIRING ∞ OUTDOOR ENCLOSURE

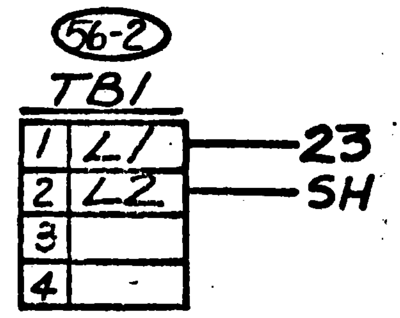

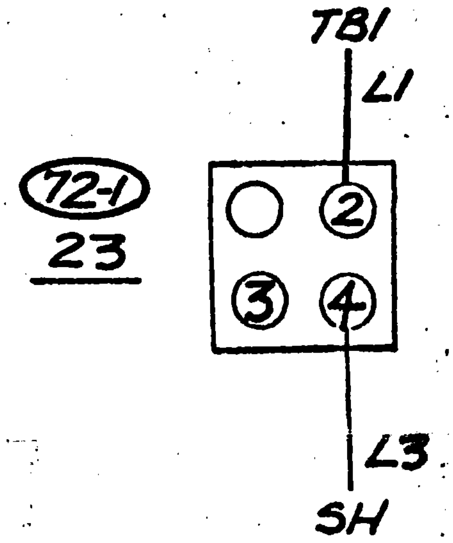

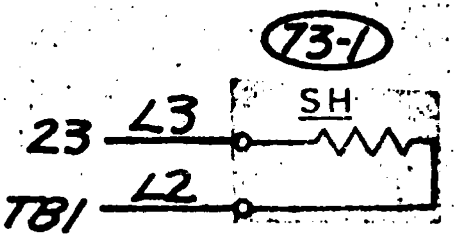

NOTES:
1. REFER TO DWG. 5-5049-1-3

C. E. FILE

APR 1 1981

Stearns-[illegible]

021700 MAR 23 81

SR No. F255.1 File No. 679

CERTIFIED
ABBOTT POWER CORPORATION
BY M Adams
DATE 3-10-81

5-5049-1-4

C			
B			
A	REVISED PER ENG.	ML	10-14-80
	REVISION	BY	DATE

DRAFT. W. Whitaill DATE 10-13-80
CHK'R DATE
APP'D DATE

Abbott Power Corporation
7650 STAGE ROAD · BUENA PARK · CALIFORNIA 90620
A MEMBER OF NEMA

TITLE 10 MWe SOLAR PILOT PLANT
DAGGETT, CALIF.
LOAD CENTER 'A'
HEATER WIRING ∞ OUTDOOR ENC.

PROJ. NO.: 5049
CUST. NO.: 4004621700
DWG. NO.: PAGE ___ OF ___
5-5049-1-4

3.2.2-74

BUS DUCT HEATER WIRING

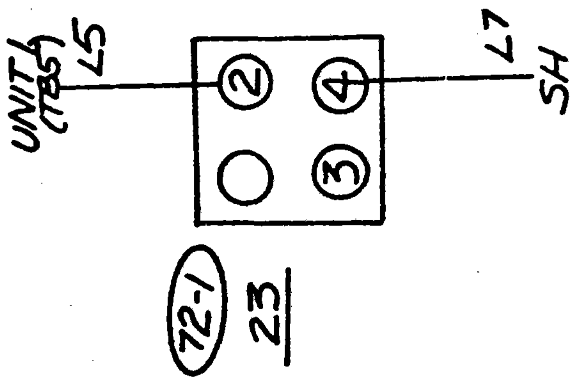

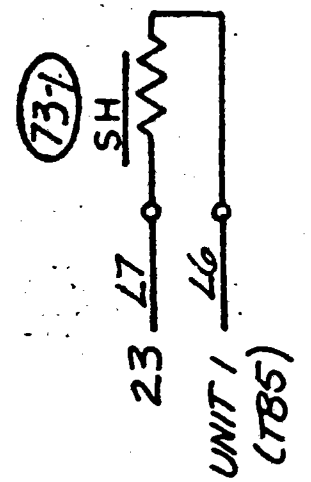

C.E. FILE

C21700 MAR 23 '81

SR No F235.1 File No 080

CERTIFIED
ABBOTT POWER CORPORATION
BY M. Adams
DATE 3-10-81

FINAL APR 1 1981

NOTES:
SEE DWG. 5-5049-3

5-5049-1-5

C			
B			
A			
REVISION		BY	DATE

DRAFT H Whitsell DATE 11-3-80
CHK'R DATE
APP'D DATE

Abbott Power Corporation
7650 STAGE ROAD · BUENA PARK · CALIFORNIA 90620
A MEMBER OF NEMA

TITLE 10MWe SOLAR PILOT PLANT
DAGGETT CALIFORNIA
LOAD CENTER 'A'
WIRING DIAGRAM - BUS DUCT

PROJ. NO.: 5049
CUST. NO.: 400462I700
DWG. NO.: PAGE ___ OF ___
5-5049-1-5

3.2.2-75

ABBOTT POWER CORPORATION

STANDARD PRODUCTION INSPECTION

FOR

LOAD INTERRUPTER SWITCHES

JOB 5049

PG 1 OF 3

C. E. FILE

FINAL MAR 13 1981

3.2.2-76

	UNIT NO.																			
	N/A	5049																		
A - ENCLOSURE																				
DIMENSIONS		X																		
MATERIAL (STEEL, ALUM. ETC)		X																		
MATERIAL GAGE		X																		
PAINT		X																		
WEATHER STRIPPING		X																		
DOORS		X																		
DOOR LATCHES		X																		
B - INSULATORS																				
INSULATOR TYPE & SIZE		X																		
FREE OF DUST		X																		
TORQUE ON MOUNTING BOLTS		X																		
C- BUS BARS																				
BAR SIZE		X																		
BAR MATERIAL		X																		
CORRECT PLATING OF CONTACT AREA		X																		
INSULATION	X																			
JOINT TORQUE		X																		

Stearns-Roger
C21700 MAR 3 '81
SR No E2351 File No 082

DATE: 2/12/81 TESTED BY: David Beachy CERTIFIED BY:

3.2.2-77

STANDARD PRODUCTION INSPECTION
FOR
LOAD INTERRUPTER SWITCHES

	N/A	5049																		
BOOTS	X																			
CENTER TO CENTER SPACING		X																		
SPACING BETWEEN BARS		X																		
SPACING TO GROUND		X																		
D- HEATERS																				
CORRECT TYPE & WATTAGE		X																		
WIRING		X																		
E- HARDWARE																				
HARDWARE MATERIAL (STEEL, ETC.)		X																		
SAE GRADE		X																		
FINISH		X																		
F- FLEXIBLE CONNECTORS																				
CONNECTOR SIZE		X																		
		X																		
G- DIECTRIC TESTS																				
(TEST VOLTS 19 KV)																				
PHASE TO GROUND (A,B,&C)		X																		
NEUTRAL TO GROUND		X																		
PHASE TO PHASE (AB,BC,AC)		X																		
PHASE TO NEUTRAL (A,B&C)	X																			

DATE: 2/12/81

TESTED BY: David Beashau

CERTIFIED BY: Manuel Rendeiro

JOB 5049

PG 2 OF 3

ABBOTT POWER CORPORATION
STANDARD PRODUCTION INSPECTION
FOR
LOAD INTERRUPTER SWITCHES

TESTED BY:
David Beashau
CERTIFIED BY: Manuel Rendeiro
Manuel Rendeiro
DATE: 2/12/81

H. MISCELLANEOUS

	N/A	5049																		
KIRK KEY INTERLOCKS	X																			
CELL DOOR INTERLOCKS		X																		
POWER FUSE SIZE	X																			
CONTROL FUSE SIZE	X																			
INTERRUPTER SWITCH RATING		X																		
INTERRUPTER SWITCH CLOSING & OPENING		X																		
PROTECTIVE SCREEN		X																		
LIGHTING	X																			
LIFTING PROVISIONS		X																		
UNDERCOAT		X																		
PADLOCKING PROVISIONS		X																		
LOCATION OF BUS THROAT		X																		
NAMEPLATE RATING & INFORMATION		X																		
CELL DOORS		X																		
DOOR LATCHES		X																		
FILTERS		X																		

3.2.2-78

DATE: 2/12/81

TESTED BY: David Beashau
David Beashau

CERTIFIED BY: Manuel Rendeiro
Manuel Rendeiro

JOB NO 5049

PAGE 3 OF 3

ABBOTT POWER CORPORATION

STANDARD PRODUCTION INSPECTION

FOR

BUS DUCTS

JOB 5049

PG 1 OF 2

FINAL

MAR 1 3 1981

UNIT NO.

G. E. FILE

3.2.2-79

A - ENCLOSURE

	N/A	5049																		
DIMENSIONS		X																		
MATERIAL (STEEL, ALUM. ETC)		X																		
MATERIAL GAGE		X																		
PAINT		X																		
WEATHER STRIPPING		X																		
WEATHER COVERS		X																		
GROUND CONTINUITY		X																		

B - INSULATORS

INSULATOR TYPE & SIZE	X																			
FREE OF DUST	X																			
TORQUE ON MOUNTING BOLTS	X																			

C- BUS BARS

BAR SIZE		X																		
BAR MATERIAL		X																		
CORRECT PLATING OF CONTACT AREA		X																		
INSULATION	X																			
JOINT TORQUE		X																		

Stearns-Roger

C21700

F235.4

No. 683

DATE: 2/12/81

TESTED BY
DAVID BEASHAU

CERTIFIED BY: Manuel Rendeiro
MANUEL RENDEIRO

	N/A	5049																		
BOOTS	X																			
CENTER TO CENTER SPACING		X																		
SPACING BETWEEN BARS		X																		
SPACING TO GROUND		X																		
D- HEATERS																				
CORRECT TYPE & WATTAGE		X																		
WIRING		X																		
E- HARDWARE																				
HARDWARE MATERIAL (STEEL, ETC.)		X																		
SAE GRADE		X																		
FINISH		X																		
F- FLEXIBLE CONNECTORS																				
CONNECTOR SIZE		X																		
NUMBER PER JOINT		X																		
G- DIECTRIC TESTS																				
(TEST VOLTS 2.2KV)		X																		
PHASE TO GROUND		X																		
NEUTRAL TO GROUND		X																		
PHASE TO PHASE		X																		
PHASE TO NEUTRAL		X																		

3.2.2-80

STANDARD PRODUCTION INSPECTION

FOR

BUS DUCTS

DATE 2/12/81

TESTED BY: David Beashau

CERTIFIED BY: Manuel Rendeiro (Q.A. MANAGER)

JOB 5049

PG 2 OF 2

QUALITY CONTROL

TEST & INSPECTION RECORDS

JOB NO. 5049

C. E. FILE

FINAL MAR 1 3 1981

Stearns-Roger

[illegible] C21700 MAR 3 '81

SR No F235.1 File No 084

Manuel Rendeiro

2-12-81 MANUEL RENDEIRO

Date Quality Assurance Manager

STANDARD PRODUCTION TESTS FOR SWITCHGEAR ASSEMBLIES

REFERENCE: ANSI C37.20c - 1974

THE FOLLOWING TESTS DO NOT INCLUDE REPORTS FOR VENDOR SUPPLIED MATERIAL, WHICH WILL BE PROVIDED UNDER A SEPARATE SUBMITTAL IF REQUIRED.

PART I TEST PROCEDURE — PAGES
RATED VOLTAGES & RANGES 2-5
6

PART II INSPECTIONS & TESTS
1. VISUAL/MECHANICAL 7-9
2. CERTIFIED REPORT GROUNDING OF INSTRUMENT TRANSFORMER CASES 10
3. FUNCTIONAL OPERATION TESTS 11-13
4. CERTIFIED REPORT, MECHANICAL OPERATION TEST 14
5. APPLIED POTENTIAL THREE PHASE 15
6. POWER TRANSFORMER 16
7. CONTROL POWER TRANSFORMER 17
8. CERTIFIED REPORT, DIELECTRIC TESTS 18-23
9. CERTIFIED REPORT, ELECTRICAL OPERATION & CONTROL WIRING TESTS 24-25

TEST EQUIPMENT	CAL. DUE DATE
Simpson Model 260 VOM	3-1-81
Abbott Test Cart 0-480V + 0-10 AMPS	3-1-81
Hipotronics Dielectric Tester 0-50KV	3-1-81

VISUAL/MECHANICAL David Beashau David Beashau — 2-12-81(Completion)
INSPECTOR — DATE

ELECTRICAL TESTS David Beashau David Beashau — 2-12-81(Completion)
INSPECTOR — DATE

CERTIFIED BY Manuel Rendeiro Manuel Rendeiro — 2-13-81
QUALITY ASSURANCE MANAGER — DATE

CUSTOMER REPRESENTATIVE ____________ ____________
DATE

	REVISION	BY	DATE
B			
A	REWRITE TO ANSI N45.2-1971	UC	9/7/77

DR. BY: UC DATE 9/21/77 CHK. BY: BB DATE 9-21-77

TITLE: Sterns-Roger
ADDRESS:
APP'D. BY:
PROJ. NO.: 5049
CUST. NO.: 4004621700

Abbott Power Corporation
7650 STAGE ROAD • BUENA PARK • CALIFORNIA 90620
A MEMBER OF NEMA

DWG. NO.: PAGE 1 OF 25
STD. PROD. TESTS
QC-15

3.2.2-82

ABBOTT POWER CORPORATION

HIGH-POTENTIAL TESTING PROCEDURES

I. SAFETY

High-potential testing is dangerous only if performed by unqualified or careless people. In the interests of safety, the following rules are to be rigidly enforced by the Quality Control Inspector.

1. The area around the equipment to be tested is to be cleared of all possible tripping hazards and extraneous materials of equipment and is to be broom-clean.
2. The equipment itself is to be closely inspected and free from dust, dirt, or debris. Buses and insulators are to be thoroughly visually inspected for cracks in insulation or insulators, etc., and are to be tested with a megohmeter immediately prior to the test even if visual-mechanical inspection was done the same day.
3. All testing is to be done by two qualified inspectors. No unqualified persons are to operate the equipment or to participate in the test. Both qualified persons are to be employees of the Company and are to be authorized to run such tests.
4. The area around the equipment to be tested is to be cordoned off and posted with warning signs on all four sides and only the qualified inspectors are permitted within the cordon. The cordoned off area is to be of sufficient size to prevent anyone from touching any part of the equipment being tested or the test set. If, during the test, any other person enters the testing area, the operator of the test set is to immediately shut off the test voltage and abort the test.
5. No equipment is to be tested at voltage higher than called for by ANSI C37.20, Page 15, Table 1 (reproduced below) unless specifically authorized by the Vice President - Engineering and special care must be exercised to be certain that the proper voltage is chosen from the table for the rated voltage of the equipment being tested.

ABBOTT POWER CORPORATION

HIGH-POTENTIAL TESTING PROCEDURES (CONTINUED)

II. TEST EQUIPMENT

The Company has two high-potential test sets. Both are equipped with variac-controls to vary the output voltage.

One unit has a maximum output voltage of 2400 V.A.C. and is used primarily for testing 600V class equipment (2200V) and for control wiring insulation tests (1500). This unit is also equipped with a timer which is set for the one minute duration required. The voltage is read directly from a 3000 V scale voltmeter.

The second unit has a maximum output of 50 KV and the voltage is read from a direct reading 50 KV scale voltmeter. The main closing contactor of this unit is interlocked by a micro-switch to insure that the variac is in the lowest position on starting and with the remote pushbutton which must be depressed by the test men to permit operation. An overload relay is incorporated which is calibrated to trip at 12 milliamperes. Electronic sensors further protect the milliamp meter from surge resulting from failure of the equipment being tested to withstand the test voltage.

The second unit is used for testing all low, medium and high-voltage equipment. All meters are calibrated in accordance with MIL-C-45662 to an accuracy of plus/minus .5% of the output voltages required to 36 KV. The accuracy at 45KV and above is plus/minus 5%.

III. TEST PROCEDURE

Before any high-potential testing is done, all busses are to be checked out with a megohmeter for clearance.

A. For equipment with stationary mounted devices and for equipment with draw-out-mounted devices with removable elements in the connected position, the following tests are to be run:

1. Phase to phase and each phase to ground with the main switching device in the closed position.
2. Phase to phase and each phase to ground on both line and load terminals with the main switching device in the open position.
3. Between line and load terminals of each phase with the main switching device in the open position.

HIGH-POTENTIAL TESTING PROCEDURES (CONTINUED)

B. For equipment with drawout-mounted devices, with the removable elements in the test position and the main switching devices in the closed position, the following tests are to be run:

1. Phase to phase and each phase to ground on both line and load stationary terminals.
2. Between line and load stationary terminals of each phase. This test shall be made with a value of voltage 10% higher than that specified in ANSI C37.20 Par. 20.5.2.1.1.

C. Phase to Ground and Neutral to Ground Test

1. Check that test set power is off and that variac setting is zero.
2. Connect grounded cable from test set to ground bar or ground lug of equipment.
3. Connect insulated cable from test set to Phase 1.
4. Depress remote pushbuttons.
5. Rotate variac slowly to raise test voltage to desired value.
6. If charging current trips the overload before desired test voltage is obtained, reset equipment and rotate variac more slowly, pausing, if necessary, at definite steps. Check ammeter for overswing which will occur on breakdown but not on charging.
7. Rotate variac rapidly to zero and turn test set power off. Do Not turn test set off before rotating variac to zero.
8. Repeat steps 3 through 6 for Phase 2, Phase 3 and the neutral.

D. Phase to Phase and Phase to Neutral Test

1. Connect grounded cable of test unit to Phase 1 and insulated cable to Phase 2 and repeat steps 4 through 7 above.
2. With grounded cable of test unit connected to Phase 1, connect insulated cable to Phase 3 and repeat steps 4 through 7 above.
3. Connect grounded test set cable to Phase 2 and insulated test set cable to Phase 3 and repeat steps 4 through 7 above.

HIGH-POTENTIAL TESTING PROCEDURES (CONTINUED)

Test Voltages: (Excerpted from ANSI C37.20, Page 15, Table 1)

Rated Voltages and Insulation Levels

A.C. Switchgear Assemblies

Rated Voltages (rms)		Insulation Levels (KV)
Rated Nominal Voltage	Rated Maximum Voltage	Power Frequency Withstand (rms)
Metal-Enclosed Low-Voltage Power Circuit Breaker Switchgear		
Volts	Volts	
240	254	2.2
480	508	2.2
600	635	2.2
Metal-Clad Switchgear		
KV	KV	
4.16	4.76	19
7.2	8.25	36
13.8	15.0	36
34.5	38.0	80
Metal-Enclosed Interrupter Switchgear		
KV	KV	
4.16	4.76	19
7.2	8.25	26
13.8	15.0	36
14.4	15.5	50
23.0	25.8	60
34.5	38.0	80
Station-Type Cubicle Switchgear		
KV	KV	
14.4	15.5	50
34.5	38.0	80
69.0	72.5	160

Rated Control Voltages

and

Their Ranges for Power

Circuit Breakers

C37.8-1952

Direct Current

Rated Voltage	Control	Power Supply		
		Solenoid or Motor Operator	Stored Energy Operator	Tripping Voltage Range
24	- - -			14-30
48	- - -			38-60
125	90-130	90-130	90-130	70-140
250	180-260	180-260	180-260	140-280
Alternating Current				
115	95-125	- - -	95-125	95-125
230	190-250	190-250	190-250	190-250

For Special Conditions Refer to C37.8-1952

ABBOTT POWER CORPORATION

STANDARD PRODUCTION TEST REPORT

SWITCHGEAR

VISUAL & MECHANICAL INSPECTION

UNIT NO.

	N/A	1A	1B	1C	1D	2A	2B	2C	2D	3A	3B	3C	3D		
1) CHECK B/M VS EQUIPMENT INSTALLED & ITS LOCATION PER DRAWING	☐	☒	☒	☒	☒	☒	☒	☒	☒	☒	☒	☒	☒	☐	☐
2) C.T. POLARITY	☐	☐	☒	☐	☐	☐	☐	☐	☐	☐	☐	☐	☐	☐	☐
3) C.T. WIRING, PROPER TAP & GROUND	☐	☐	☒	☐	☐	☐	☐	☐	☐	☐	☐	☐	☐	☐	☐
4) P.T. CARRIAGE OPERATION	☒	☐	☐	☐	☐	☐	☐	☐	☐	☐	☐	☐	☐	☐	☐
5) P.T. CONNECTIONS & POLARITY	☐	☐	☐	☐	☒	☐	☐	☐	☐	☐	☐	☐	☐	☐	☐
6) P.T. PRIMARY WIRING	☐	☐	☐	☐	☒	☐	☐	☐	☐	☐	☐	☐	☐	☐	☐
7) P.T. SECONDARY WIRING	☐	☐	☐	☐	☒	☐	☐	☐	☐	☐	☐	☐	☐	☐	☐
8) ALL FUSES & FUSE RATINGS	☐	☐	☐	☐	☒	☐	☐	☐	☐	☐	☐	☐	☐	☐	☐
9) BUS INSULATION, SLEEVE & BOOTS	☒	☐	☐	☐	☐	☐	☐	☐	☐	☐	☐	☐	☐	☐	☐
10) PHASE CLEARANCE	☐	☐	☒	☒	☐	☐	☒	☒	☒	☐	☒	☒	☒	☐	☐
11) BUS SUPPORTS & SPACING	☐	☐	☒	☒	☐	☐	☒	☒	☒	☐	☒	☒	☒	☐	☐
12) BUS JOINTS, TIGHTNESS	☐	☐	☒	☒	☐	☐	☒	☒	☒	☐	☒	☒	☒	☐	☐
13) CPT WIRING CONNECTIONS	☐	☒	☐	☐	☐	☐	☐	☐	☐	☐	☐	☐	☐	☐	☐
14) CPT FUSE CARRIAGE	☒	☐	☐	☐	☐	☐	☐	☐	☐	☐	☐	☐	☐	☐	☐
15) CONTROL WIRING	☐	☒	☒	☒	☒	☒	☒	☒	☐	☒	☒	☒	☐	☐	☐

For the purpose of this report, the compartments are grouped in vertical columns designated 1 to 3 from the left. Within each column the compartments are further designated A to D from top to bottom.

JOB NO. 5049

ABBOTT POWER CORPORATION

STANDARD PRODUCTION TEST REPORT

SWITCHGEAR

VISUAL & MECHANICAL INSPECTION

UNIT NO.

	N/A	1A	1B	1C	1D	2A	2B	2C	2D	3A	3B	3C	3D		
16) TERMINAL BLOCK	☐	☒	☐	☐	☐	☒	☐	☐	☐	☒	☐	☐	☐	☐	☐
17) TEST KEY INTERLOCKS	☒	☐	☐	☐	☐	☐	☐	☐	☐	☐	☐	☐	☐	☐	☐
18) DOOR LATCHES	☐	☒	☒	☒	☒	☒	☒	☒	☒	☒	☒	☒	☒	☐	☐
19) DOOR STRAIGHTNESS	☐	☒	☒	☒	☒	☒	☒	☒	☒	☒	☒	☒	☒	☐	☐
20) DOOR STOPS	☒	☐	☐	☐	☐	☐	☐	☐	☐	☐	☐	☐	☐	☐	☐
21) WEATHERPROOFING/GASKETS	☒	☐	☐	☐	☐	☐	☐	☐	☐	☐	☐	☐	☐	☐	☐
22) WIND LATCHES	☒	☐	☐	☐	☐	☐	☐	☐	☐	☐	☐	☐	☐	☐	☐
23) INSTRUMENT CLEARANCE TO BKR.	☒	☐	☐	☐	☐	☐	☐	☐	☐	☐	☐	☐	☐	☐	☐
24) CELL INTERLOCKS	☒	☐	☐	☐	☐	☐	☐	☐	☐	☐	☐	☐	☐	☐	☐
25) AUXILIARY CONTACT WIRING	☐	☐	☒	☒	☐	☐	☒	☒	☐	☐	☒	☒	☐	☐	☐
26) SECONDARY CONTACT WIRING	☐	☐	☒	☒	☐	☐	☒	☒	☐	☐	☒	☒	☐	☐	☐
27) PAINT	☐	☒	☒	☒	☐	☐	☐	☐	☐	☐	☐	☐	☐	☐	☐
28) CHECK INSTRUMENTS CASES & TRANSFORMER GRDS.	☐	☒	☐	☐	☒	☒	☐	☐	☐	☐	☐	☐	☐	☐	☐
29) CHECK NAMEPLATES FOR CORRECT RATING AND IDENTIFICATION INFORMATION.	☐	☒	☒	☒	☒	☒	☒	☒	☒	☒	☒	☒	☒	☐	☐

JOB NO. 5049

ABBOTT POWER CORPORATION

STANDARD PRODUCTION TEST REPORT

SWITCHGEAR

UNIT NO.

VISUAL & MECHANICAL INSPECTION

	N/A	1A	1B	1C	1D	2A	2B	2C	2D	3A	3B	3C	3D		
30) CHECK FOR CORRECT LUG	☒	☐	☐	☐	☐	☐	☐	☐	☐	☐	☐	☐	☐	☐	☐
31) CHECK CONTROL WIRING FOR PROPER LUG TYPE	☐	☒	☒	☒	☒	☒	☒	☒	☐	☒	☒	☒	☐	☐	☐
32) IS UNIT LEFT OR RIGHT HAND (DOOR HINGE)	☐	L	L	L	L	L	L	L	L	L	L	L	L	☐	☐
33) ITEM NO. & COMMENTS FOR CORRECTION	☐	☐	☐	☐	☐	☐	☐	☐	☐	☐	☐	☐	☐	☐	☐

JOB NO. 5049

Abbott

ABBOTT POWER CORPORATION

STANDARD PRODUCTION TEST
(ANSI C37.20 Par. 20.5.3)

Certified Report

Grounding of Instrument Transformer

Cases Test

In accordance with: American National Standard for Switchgear Assemblies, ANSI C37.20-1974, Page 25, Par. 20.5.3.3.

Excerpt: "The effectiveness of instrument transformer case or frame grounding shall be checked by a low potential source, such as 10 volts or less, using bells, buzzers or lights."

Customer: Stearns-Rogers Order No. 4004621700

Date of Test: 2/12/81 (completion)

Equipment Tested: 480 Volt load center

Low Potential Source 3 DC
Voltage Type

Results: Satisfactory x Unsatisfactory

Corrections Required if any: None

Test Run By: David Beashau David Beashau

Witnessed By: Jose Martinez Jose Martinez

Job No. 5049

Customer's Representative
(If called for on Contract)

I hereby certify that the above tests were run in accordance with ANSI C37.20 and that the results recorded reflect the data as noted.

Manuel Rendeiro
Manuel Rendeiro
Quality Assurance Manager
Abbott Power Corporation

ABBOTT POWER CORPORATION

STANDARD PRODUCTION TEST REPORT

FUNCTIONAL OPERATION TEST

SWITCHGEAR

UNIT NO.

	N/A	1A	1B	1C	1D	2A	2B	2C	2D	3A	3B	3C	3D		
1) INSERTION & WITHDRAWL OF BKRS.	☐	☐	☒	☒	☐	☐	☒	☒	☐	☐	☒	☒	☐	☐	☐
2) SHUTTER OPERATION	☒	☐	☐	☐	☐	☐	☐	☐	☐	☐	☐	☐	☐	☐	☐
3) MANUAL OPERATION OF BKR.	☐	☐	☒	☒	☐	☐	☒	☒	☐	☐	☒	☒	☐	☐	☐
4) MECHANICAL INTERLOCKS	☐	☐	☒	☒	☐	☐	☒	☒	☐	☐	☒	☒	☐	☐	☐
5) INTERCHANGEABILITY *	☐	☐	☐	☐	☐	☐	☐	☐	☐	☐	☐	☐	☐	☐	☐
6) CONTROL WIRING CONTINUITY	☐	☒	☒	☒	☒	☒	☒	☒	☐	☐	☒	☒	☐	☐	☐
7) STRIP HEATERS	☒	☐	☐	☐	☐	☐	☐	☐	☐	☐	☐	☐	☐	☐	☐
8) BREAKER ELECTRICAL OPR. (MAN.)	☒	☐	☐	☐	☐	☐	☐	☐	☐	☐	☐	☐	☐	☐	☐
9) BKR. OPR. MIN. VOLTAGE Shunt trip only	☐	☐	☒	☒	☐	☐	☒	☒	☐	☐	☑	☑	☐	☐	☐
10) BREAKER ELECTRICAL OPR. (AUTO) Shunt Trip Only	☐	☐	☒	☒	☐	☐	☒	☒	☐	☐	☑	☑	☐	☐	☐
11) PHASE OVERCURRENT RELAYS	☒	☐	☐	☐	☐	☐	☐	☐	☐	☐	☐	☐	☐	☐	☐
12) GROUND OVERCURRENT RELAY	☒	☐	☐	☐	☐	☐	☐	☐	☐	☐	☐	☐	☐	☐	☐

13) AMMETER HALF SCALE 2.5 AMPS ☐

A 800

B 800

C 800

*All breakers of the same rating are interchangeable

JOB NO. 5049

3.2.2-92

ABBOTT POWER CORPORATION

STANDARD PRODUCTION TEST REPORT

SWITCHGEAR

FUNCTIONAL OPERATION TEST

UNIT NO.

	N/A		1A	1B	1C	1D	2A	2B	2C	2D	3A	3B	3C	3D		
13) AMMETER FULL SCALE 5 AMPS	☐	A	1600													
		B	1600													
		C	1600													
14) REVERSE POWER RELAY	☒		☐	☐	☐	☐	☐	☐	☐	☐	☐	☐	☐	☐	☐	☐
15) UNDER-VOLTAGE CONTACT CLOSE	☐		V	V	V	V	ADJ V	V	V	V	V	V	V	V	V	
CONTACT OPEN			V	V	V	V	ADJ V	V	V	V	V	V	V	V	V	
16) VOLTMETER ~~HALF SCALE~~ AT 60V	☐	A	240													
		B	240													
		C	240													
~~FULL SCALE~~ AT 120V		A	480													
		B	480													
		C	480													
P.T. RATIO	☐					4/01										

JOB NO. 5049

ABBOTT POWER CORPORATION

STANDARD PRODUCTION TEST REPORT

SWITCHGEAR

UNIT NO.

	N/A	1A	1B	1C	1D	2A	2B	2C	2D	3A	3B	3C	3D	___	___
17) WATTMETER V = _____ I = ______	☒	___KW	___KW	___KW	___KW	___KW	___KW	___KW	___KW	___KW	___KW	___KW	___KW	___KW	___
18) WATTHOUR METER V = ______ I = _____ (RPM) K_H = ________	☐	___REV	___REV	___REV	___REV	___REV	___REV	___REV	___REV	___REV	___REV	___REV	___REV	___REV	___R
19) DIFFERENTIAL RELAYS	☒	☐	☐	☐	☐	☐	☐	☐	☐	☐	☐	☐	☐	☐	☐
20) GROUND FAULT RELAY (ZERO SEQ)	☒	☐	☐	☐	☐	☐	☐	☐	☐	☐	☐	☐	☐	☐	☐
21) SYNCHROSCOPE	☒	☐	☐	☐	☐	☐	☐	☐	☐	☐	☐	☐	☐	☐	☐
22) VARMETER	☒	☐	☐	☐	☐	☐	☐	☐	☐	☐	☐	☐	☐	☐	☐
23) RECORDING AMMETER	☒	☐	☐	☐	☐	☐	☐	☐	☐	☐	☐	☐	☐	☐	☐
24) RECORDING VOLTMETER	☒	☐	☐	☐	☐	☐	☐	☐	☐	☐	☐	☐	☐	☐	☐
25) RECORDING WATTMETER	☒	☐	☐	☐	☐	☐	☐	☐	☐	☐	☐	☐	☐	☐	☐
26) RECORDING VARMETER	☒	☐	☐	☐	☐	☐	☐	☐	☐	☐	☐	☐	☐	☐	☐
27) FREQUENCY METER MISCELLANEOUS DEVICES	☒	☐	☐	☐	☐	☐	☐	☐	☐	☐	☐	☐	☐	☐	☐
28) CLOSE-OPEN NO. OF OPR. ____ MIN.V	☒	☐	☐	☐	☐	☐	☐	☐	☐	☐	☐	☐	☐	☐	☐
NORM.V	☒	☐	☐	☐	☐	☐	☐	☐	☐	☐	☐	☐	☐	☐	☐
MAX.V	☒	☐	☐	☐	☐	☐	☐	☐	☐	☐	☐	☐	☐	☐	☐

JOB NO. 5049

Abbott

ABBOTT POWER CORPORATION

STANDARD PRODUCTION TEST

(ANSI C37.20 Par. 20.5.3)

Certified Report

Mechanical Operation Tests

In accordance with: American National Standard for Switchgear Assemblies, ANSI C37.20-1974, Page 25, Paragraph 20.5.3.2.

Excerpt: "Mechanical tests shall be performed to ensure the proper functioning of shutters, removable unit operating mechanisms, mechanical interlocks, etc. These tests shall ensure the interchangeability of removable units designed to be interchangeable."

Customer Stearns-Roger Order No. 4004621700

Date Test Started ______ Date Test Completed 2/10/81

Equipment Tested 480 Volt Load Center

Tests: (Check Applicable Items)

1. Insertion and Withdrawal of Drawout Units XX
2. Manual Operation of Circuit Breaker X
3. Mechanical Interlocks XX
4. Shutter Operation N/A
5. Interchangeability *See Note Pg. 11
6. Clearances XX
7. Other (specify) None

Corrections (if required) None

Test Run By: David Beashau David Beashau

Witnessed By: Jose Martinez J. Martinez

Job No. 5049

Customers Representative
(If called for in Contract)

I hereby certify that the above tests were run in accordance with ANSI C37.20 and that the results recorded reflect the data as noted.

Manuel Rondein

Quality Assurance Manager
Abbott Power Corporation

ABBOTT POWER CORPORATION

STANDARD PRODUCTION TEST REPORT

SWITCHGEAR

APPLIED POTENTIAL

APPLY 480 RATED VOLTAGE TO MAIN BUS, ALL BREAKERS CLOSED & CHECK ALL VOLTAGE DEVICES FOR CORRECT OPERATION.

COMMENTS:

JOB NO. 5049

QC-15 REV. A

ABBOTT POWER CORPORATION

STANDARD PRODUCTION TEST REPORT

SWITCHGEAR

<u>POWER TRANSFORMERS</u>

<u>UNIT NO.</u>

	N/A															
1) TRANSFORMER	☒	KVA														
		PRI V.														
		SEC V.														
		IMP.														
2) FAN CONTROL	☒		☐	☐	☐	☐	☐	☐	☐	☐	☐	☐	☐	☐	☐	☐
3) ALARM RELAY	☒		☐	☐	☐	☐	☐	☐	☐	☐	☐	☐	☐	☐	☐	☐
4) TRIPPING RELAY	☒		☐	☐	☐	☐	☐	☐	☐	☐	☐	☐	☐	☐	☐	☐
5) TAP CHANGER (MANUAL)	☒		☐	☐	☐	☐	☐	☐	☐	☐	☐	☐	☐	☐	☐	☐

JOB NO. 5049

ABBOTT POWER CORPORATION

STANDARD PRODUCTION TEST REPORT

SWITCHGEAR

CONTROL POWER TRANSFORMER

UNIT NO.

c	N/A		1A	1B	1C	1D	2A	2B	2C	2D	3A	3B	3C	3D		
1) TRANSFORMER	☐	KVA				3										
		PRI V.				480										
		SEC V.				120/240										
		IMP.														
2) APPLEID PRI. POTENTIAL 480 V	☐	SEC V.				120/240										
3) FUSE SIZE	☐					20A										

JOB NO. 5049

ABBOTT POWER CORPORATION

STANDARD PRODUCTION TEST

(ANSI C37.20 Para. 20.5.3)

Certified Report

High Potential Dielectric Test

In accordance with: American National Standard for Switchgear Assemblies, ANSI C37.20 Page 25, Paragraph 20.5.3.1.

Excerpts: 20.5.3.1 "Dielectric Tests" Power frequency withstand test shall be made at the factory on each switchgear assembly structure in the same manner as described in 20-5.2.1.1.

20.5.2.1 (Supplement, dated March 19, 1970) "Dielectric Tests". Dielectric withstand tests shall be made under the temperature and humidity conditions normally obtained under condition of commercial testing with appropriate correction factors applied as outlined in American National Standard Techniques for Dielectric Tests, C68.1-1968 (IEEE No. 4). The equipment shall be clean and in good condition and shall not have been put into commercial service.

Dielectric withstand tests shall be made as follows:

(1) For equipment with stationary-mounted devices and for equipment with drawout-mounted devices with the removable elements in the connected position.

- (a) Phase to phase and each phase to ground with the main switching devices in the closed position.
- (b) Phase to phase and each phase to ground on both line and load terminals with the main switching device in the open position.
- (c) Between line and load terminals of each phase with the main switching device in the open position.

(2) For equipment with drawout-mounted devices with the removable elements in the test position and the main switching devices in the closed position.

- (a) Phase to phase and each phase to ground on both line and load stationary terminals.
- (b) Between line and load stationary terminals of each phase. This test shall be made with a valve of voltage 10 percent higher than that specified in 20-5.2.1.1 and 5.2.1.2.

ABBOTT POWER CORPORATION

STANDARD PRODUCTION TEST REPORT

SWITCHGEAR

UNIT NO.

1) HIGH POTENTIAL TEST 2.2 KV FOR 1 MIN. ON MAIN BUS. ALL BREAKERS CLOSED	N/A	1A	1B	1C	1D	2A	2B	2C	2D	3A	3B	3C	3D		
AØ-GRD	☐	☐	☒	☒	☐	☐	☒	☒	☒	☐	☒	☒	☒	☐	☐
BØ-GRD	☐	☐	☒	☒	☐	☐	☒	☒	☒	☐	☒	☒	☒	☐	☐
CØ-GRD	☐	☐	☒	☒	☐	☐	☒	☒	☒	☐	☒	☒	☒	☐	☐
AØ-BØ	☐	☐	☒	☒	☐	☐	☒	☒	☒	☐	☒	☒	☒	☐	☐
BØ-CØ	☐	☐	☒	☒	☐	☐	☒	☒	☒	☐	☒	☒	☒	☐	☐
CØ-AØ	☐	☐	☒	☒	☐	☐	☒	☒	☒	☐	☒	☒	☒	☐	☐
2) ALL BREAKERS OPEN															
LINE AØ-GRD	☐	☐	☒	☒	☐	☐	☒	☒	☒	☐	☒	☒	☒	☐	☐
BØ-GRD	☐	☐	☒	☒	☐	☐	☒	☒	☒	☐	☒	☒	☒	☐	☐
CØ-GRD	☐	☐	☒	☒	☐	☐	☒	☒	☒	☐	☒	☒	☒	☐	☐
AØ-BØ	☐	☐	☒	☒	☐	☐	☒	☒	☒	☐	☒	☒	☒	☐	☐
BØ-CØ	☐	☐	☒	☒	☐	☐	☒	☒	☒	☐	☒	☒	☒	☐	☐

JOB NO. 5049

ABBOTT POWER CORPORATION

STANDARD PRODUCTION TEST REPORT

SWITCHGEAR

DIELECTRIC TESTS

UNIT NO.

2) ALL BREAKERS OPEN (CONT.)

	N/A	1A	1B	1C	1D	2A	2B	2C	2D	3A	3B	3C	3D		
LINE CØ-AØ	☐	☐	☒	☒	☐	☐	☒	☒	☒	☐	☒	☒	☒	☐	☐
LOAD AØ-GRD	☐	☐	☒	☒	☐	☐	☒	☒	☒	☐	☒	☒	☒	☐	☐
BØ-GRD	☐	☐	☒	☒	☐	☐	☒	☒	☒	☐	☒	☒	☒	☐	☐
CØ-GRD	☐	☐	☒	☒	☐	☐	☒	☒	☒	☐	☒	☒	☒	☐	☐
AØ-BØ	☐	☐	☒	☒	☐	☐	☒	☒	☒	☐	☒	☒	☒	☐	☐
BØ-CØ	☐	☐	☒	☒	☐	☐	☒	☒	☒	☐	☒	☒	☒	☐	☐
CØ-AØ	☐	☐	☒	☒	☐	☐	☒	☒	☒	☐	☒	☒	☒	☐	☐

3) ALL BREAKERS IN THE TEST POSITION & CLOSED 2.2 KV FOR 1 MIN.

	N/A	1A	1B	1C	1D	2A	2B	2C	2D	3A	3B	3C	3D		
LINE AØ-GRD	☐	☐	☒	☒	☐	☐	☒	☒	☒	☐	☒	☒	☒	☐	☐
BØ-GRD	☐	☐	☒	☒	☐	☐	☒	☒	☒	☐	☒	☒	☒	☐	☐
CØ-GRD	☐	☐	☒	☒	☐	☐	☒	☒	☒	☐	☒	☒	☒	☐	☐
AØ-BØ	☐	☐	☒	☒	☐	☐	☒	☒	☒	☐	☒	☒	☒	☐	☐
BØ-CØ	☐	☐	☒	☒	☐	☐	☒	☒	☒	☐	☒	☒	☒	☐	☐

JOB NO. 5049

ABBOTT POWER CORPORATION

STANDARD PRODUCTION TEST REPORT

SWITCHGEAR

DIELECTIRC TESTS (CONT.)

UNIT NO.

	N/A	1A	1B	1C	1D	2A	2B	2C	2D	3A	3B	3C	3D		
LINE CØ-AØ	☐	☐	☒	☒	☐	☐	☒	☒	☒	☐	☒	☒	☒	☐	☐
LOAD AØ-GRD	☐	☐	☒	☒	☐	☐	☒	☒	☒	☐	☒	☒	☒	☐	☐
BØ-GRD	☐	☐	☒	☒	☐	☐	☒	☒	☒	☐	☒	☒	☒	☐	☐
CØ-GRD	☐	☐	☒	☒	☐	☐	☒	☒	☒	☐	☒	☒	☒	☐	☐
AØ-BØ	☐	☐	☒	☒	☐	☐	☒	☒	☒	☐	☒	☒	☒	☐	☐
BØ-CØ	☐	☐	☒	☒	☐	☐	☒	☒	☒	☐	☒	☒	☒	☐	☐
CØ-AØ	☐	☐	☒	☒	☐	☐	☒	☒	☒	☐	☒	☒	☒	☐	☐
LINE TO LOAD AØ	☐	☐	☒	☒	☐	☐	☒	☒	☒	☐	☒	☒	☒	☐	☐
BØ	☐	☐	☒	☒	☐	☐	☒	☒	☒	☐	☒	☒	☒	☐	☐
CØ	☐	☐	☒	☒	☐	☐	☒	☒	☒	☐	☒	☒	☒	☐	☐

THIS TEST TO BE 10% HIGHER THAN TABEL VALUE

	N/A	1A	1B	1C	1D	2A	2B	2C	2D	3A	3B	3C	3D		
4) INSTRUMENT & CONTROL WIRING 1500V FOR 1 MIN.	☐	☒	☒	☒	☒	☒	☒	☒	☐	☒	☒	☒	☐	☐	☐

JOB NO. 5049

ABBOTT POWER CORPORATION

STANDARD PRODUCTION TEST

(ANSI C37.20, Par. 20.5.3)

Certified Report

High Potential Dielectric Test (Continued)

Test Voltage (from ANSI C37.20, Table #1, Page 15) 2.2KV

Duration 1 Minute

1. For Stationary or Drawout Equipment

   a. With Main Switching Device Closed:
   (If drawout equipment - all other devices in the connected position but open)

   Phase to Ground (3) OK

   Neutral to Ground N/A

   b. With Main Switching Device Open:
   (drawout devices same as above)

   Phase to Phase OK

   Line to Ground OK

   Load to Ground OK

   Line to Load (across main switch terminals) 3 OK

2. For Drawout Equipment Only

   a. With all removable elements in the test position and the main switching device closed:

   Phase to Phase - Line (3) OK

   Phase to Ground - Line (3) OK

   Phase to Phase - Load (all devices) OK

   Phase to Ground - Load (all devices) OK

Abbott

ABBOTT POWER CORPORATION

STANDARD PRODUCTION TEST
(ANSI C37.20 Par. 20.5.3)

Certified Report

High Potential Dielectric Test (continued)

b. With all removable elements in the test position and the main switching device closed and the test voltage increased by 10%.

Line to Load (across each device, all phases) 2.2KV

Bus Test Voltage	Increase to
2.2 KV x	2.42 KV x
19 KV	20.9 KV
36 KV	39.6 KV

Duration : 1 Minute

Corrections Required to Complete Test: None

Results: Satisfactory x Unsatisfactory

Test Run By: David Beashau Job No. 5049

Witnessed by: Jose Martinez

Abbott Power Corporation Customer's Representative

I hereby certify that the above tests were run in accordance with ANSI C37.20 and that the results recorded reflect the data as noted.

Manuel Rendeiro

Manuel Rendeiro
Quality Assurance Manager
Abbott Power Corporation

Abbott

ABBOTT POWER CORPORATION

STANDARD PRODUCTION TEST

(ANSI C37.20 Par. 20.5.3)

Certified Report

Electrical Operation and Control Wiring Tests

In accordance with: American National Standard for Switchgear Assemblies, ANSI C37.20-1974, Page 25, Paragraph 20.5.3.4.

Excerpts: 20.5.3.4.1 "Control Wiring Continuity. The correctness of the control wiring of a switchgear assembly shall be verified by either (1) exact electrical operation of the component control devices or (2) individual circuit continuity checks by electrical circuit testers."

20.5.3.4.2 "Control Wiring Insulation Test. A 60 - Hertz test voltage, 1500 volts to ground, shall be applied for 1 minute after all circuit grounds have been disconnected and all circuits are wired together with small bare copper wire to short circuit coil windings."

20.5.3.4.3 "Polarity Tests. Tests shall be made to ensure that connections between instrument transformers and meters or relays, etc., are correctly connected for relative polarities, Instruments shall be tested to ensure that pointers move in the proper direction."

Customer Stearns-Roger Order No. 4004621700

Date Test Started: ______ Date Test Completed: 2-12-81

Equipment Tested: 480V Load Center

1. Control Wiring Continuity Test (Point to Point Check): x

2. Control Wiring Insulation Test: x

   a) Applied Voltage: 1500V Duration: 1 Minute

   b) Results: Satisfactory x Unsatisfactory

3. Polarity Tests: x Completed 2-12-81

4. Sequence Tests: N/A

   a) Correct Operation of devices within equipment: (Describe method and test equipment used) with APC test cart checked function of all relays, meters, and switches.

   Completed: 2-12-81

Abbott

ABBOTT POWER CORPORATION

STANDARD PRODUCTION TEST

(ANSI C37.20 Par. 20.5.3)

Certified Report

Electrical Operation and Control Wiring Tests (continued)

b) Simulated remote operation: (Describe method and test equipment used)

N/A

C) Failures and Corrections Noted for a. and b. above:

N/A

Test Run By: David Beasham David C Beasham

Witnessed By: Jose Martinez Jose Martinez

Customer's Representative

Job No. 5049

I hereby certify that the above tests were run in accordance with ANSI C37.20 and that the results recorded reflect the data as noted.

Manuel Rendeiro

Manuel Rendeiro
Quality Assurance Manager
Abbott Power Corporation

5049

Westinghouse
Electric Corporation
General Control Division

[illegible]
[illegible]

[illegible] LAI-16499-1

Purchaser Elliott Power
Buena Park, CA 90621

Apparatus 480 V Motor Control Center DATE Jan 23, 1981

Factory tests were made in accordance with NEMA requirements to verify that functioning of the MCC was in accordance with the electrical diagrams. Where applicable to the specific equipment of this order, the following tests were included:

GENERAL

1. Actual operation performed wherever possible. Otherwise, inspection or continuity checks made.
2. Component devices operated in circuits as shown on diagrams or as called for by specific test instructions.
3. Equipment passed all tests and inspections.

DETAILED TESTS

A. Control Circuits and Devices
   1. Control bus energized at rated control voltage.
   2. Control devices operated as shown on diagrams.
   3. Continuity check of all circuits which were included in operational test.
B. Instruments, Meters, Protective Relays & Associated Equipment
   1. Unless otherwise reported, the devices functionally tested by energizing potential circuits to rated values. Connections to devices made at outgoing terminal blocks, where required.
   2. Protective relays operated for functional check and trips manually operated to verify correct functioning of operation for indicator and associated circuits.
C. Dielectric Tests
   1. Primary circuits and equipment (except potential transformers). Tests made (1) phase to phase or between busses of opposite polarity, and (2) phase to ground with 60 cycle test voltages applied for one minute as follows: 2000 VAC Test voltage.

REMARKS:

FINAL

Stearns-Roger
C21700 MAR 17 '81
SR No F235.1 File No 085

D. E. FILE

This certifies that the foregoing is a true report based on factory tests made and recorded at the Chicago Plant of the General Control Division of Westinghouse Electric Corporation.

Signed ______ (Quality Assurance Manager)

5049

G.O. No. LA I - 16499-2

Purchaser Abbott Power

Buena Park CA 90621

Apparatus 480 V Motor Control Center DATE Jan 26, 1980

Factory tests were made in accordance with NEMA requirements to verify that functioning of the MCC was in accordance with the electrical diagrams. Where applicable to the specific equipment of this order, the following tests were included:

GENERAL

1. Actual operation performed wherever possible. Otherwise, inspection or continuity checks made.
2. Component devices operated in circuits as shown on diagrams or as called for by specific test instructions.
3. Equipment passed all tests and inspections.

DETAILED TESTS

A. Control Circuits and Devices
   1. Control bus energized at rated control voltage.
   2. Control devices operated as shown on diagrams.
   3. Continuity check of all circuits which were included in operational test.

B. Instruments, Meters, Protective Relays & Associated Equipment
   1. Unless otherwise reported, the devices functionally tested by energizing potential circuits to rated values. Connections to devices made at outgoing terminal blocks, where required.
   2. Protective relays operated for functional check and trips manually operated to verify correct functioning of operation for indicator and associated circuits.

C. Dielectric Tests
   1. Primary circuits and equipment (except potential transformers). Tests made (1) phase to phase or between busses of opposite polarity, and (2) phase to ground with 60 cycle test voltages applied for one minute as follows: 2000VAC Test voltage.

Stearns-Roger

FINAL

C21700 MAR 17 '81

REMARKS:

SR No F2551 File No 086

C. E. FILE

This certifies that the foregoing is a true report based on factory tests made and recorded at the Chicago Plant of the General Control Division of Westinghouse Electric Corporation.

Signed (Quality Assurance Manager)

Abbott Power Corporation

Abbott

REFER TO Patty Janson NOTED

ANS'D

April 13, 1981

Stearns-Roger, Inc.
P.O. Box 5888
Denver, Colorado 80217

Attn: Ms. Patty Janson

Re: P.O. #404C21700 4004
Abbott Project #5049

Dear Ms. Janson:

This letter is confirming the prices for spare parts that I gave to Donna Dennis over the telephone on April 10, 1981. Included with the spare parts that you requested on April 6, 1981 we also included recommended spare parts and quantities that may be needed in the future.

QUANTITY	DESCRIPTION	PRICE	
1	DS-416 Air Circuit Breaker, 1600A & Trip	4,105.00	each
1	DS-206 Air Circuit Breaker, 800A/600A Trip	2,132.00	each
10	EON-6 6 Amp fuses, 250V	25.00	lot
10	JCL-3 3 Amp fuses, 600V	29.00	lot
10	JHC-15 CPT primary fuses, 600V, 15A	22.00	lot
10	EON-6 CPT secondary fuses, 250V,20A	10.00	lot
1	Breaker levering-in crank	51.00	each
3	5KV insulators	10.00	each
6	480V insulators	5.00	each
1	Cooling fan motor	181.00	each

C. E. FILE

Stearns-Roger
C21700 APR 16 '81

FINAL

SR No 4235.1 File No 087

7650 STAGE ROAD • BUENA PARK • CALIFORNIA 90621
(213) 921-1421 • (714) 521-8430

Stearns-Roger, Inc.
April 13, 1981
Page Two

QUANTITY	DESCRIPTION	PRICE
1	Size "1" Starter with Circuit Breaker	519.00 each
2	Shunt Trip Coils	175.00 each

If you have any questions, or require additional information, please contact us.

Sincerely,

ABBOTT POWER CORPORATION

Tracy L. Walters

Tracy L. Walters
Sales Administrator

TLW:tw

BALTEAU STANDARD INC.

Balteau

8001 TABLE ROCK ROAD, MEDFORD, OREGON 97501 · (503) 826-2113 · TELEX: 36-0247 · CABLE: STANMED

CUSTOMER ABBOTT POWER FACTORY ORDER NO. PB-92133-1

PURCHASE ORDER NO. 5049-P4 KVA 1000 HIGH VOLTAGE 4160 DELTA

LOW VOLTAGE 480Y/277 TAPS 2±2.5% RATIO OK RISE°C 65

HLG 19 kv LG 10 kv IND. 2 x Normal

SERIAL NUMBER	NO LOAD WATTS	%IEX RATED VOLTS	LOAD WATTS	TOTAL WATTS	IMPEDENCE PERCENT	H.V. RES.	L.V. RES.
PLL 2039	1840	0.57	9304	11144	5.7	.513	.0036

Similar Unit Heat Run Data:
FO# PB-90960, SN# PKA 0440
HV Rise By Resistance 62.2 °c
LV Rise By Resistance 58.2 °c
Top Oil Rise 56.3 °c

Units Passed Production Line Impulse Of 60 KV.

CERTIFIED AS TRUE DATA BY: JR Pickett
JOHN R. PICKETT
DESIGN ENGINEER

DATE: 12/24/80

☒ REVIEWED/NO COMMENTS
☐ REVIEWED/SEE COMMENTS
☐ REVISE PER COMMENTS & RESUBMIT FOR REVIEW
☐ SEE LETTER OF TRANSMITTAL
ENG. DEPT. BY [illegible] DATE MAY 1 1981
NEITHER REVIEW, COMMENT, NOR REVISION RELIEVES MANUFACTURER OR CONTRACTOR FROM RESPONSIBILITY FOR COMPLIANCE WITH SPECIFICATIONS OR WITH ALL OTHER CONTRACT REQUIREMENTS.
RETURN TO
Stearns-Roger
INCORPORATED
ON OR BEFORE

FINAL MAY 12 1981

C. E. FILE

Stearns-Roger

C21700 APR 16 '81

SR No F235.1 File No 038

☒ REVIEWED/NO COMMENTS
☐ REVIEWED/SEE COMMENTS
☐ REVISE PER COMMENTS & RESUBMIT FOR REVIEW
☐ SEE LETTER OF TRANSMITTAL

ENG. DEPT. BY ____________ DATE JUN 2? 1981

NEITHER REVIEW, COMMENT, NOR REVISION RELIEVES MANUFACTURER OR CONTRACTOR FROM RESPONSIBILITY FOR COMPLIANCE WITH SPECIFICATIONS OR WITH ALL OTHER CONTRACT REQUIREMENTS.

RETURN TO
Stearns-Roger
ON OR BEFORE

Certified as True Data by Mike Dickinson
Mike Dickinson
Sr. Design Engineer
Date 6/5/81

C. E. FILE FINAL JUN 29 1981

C2I700 JUN 19 '81

S-R No. F235 / File No. 89

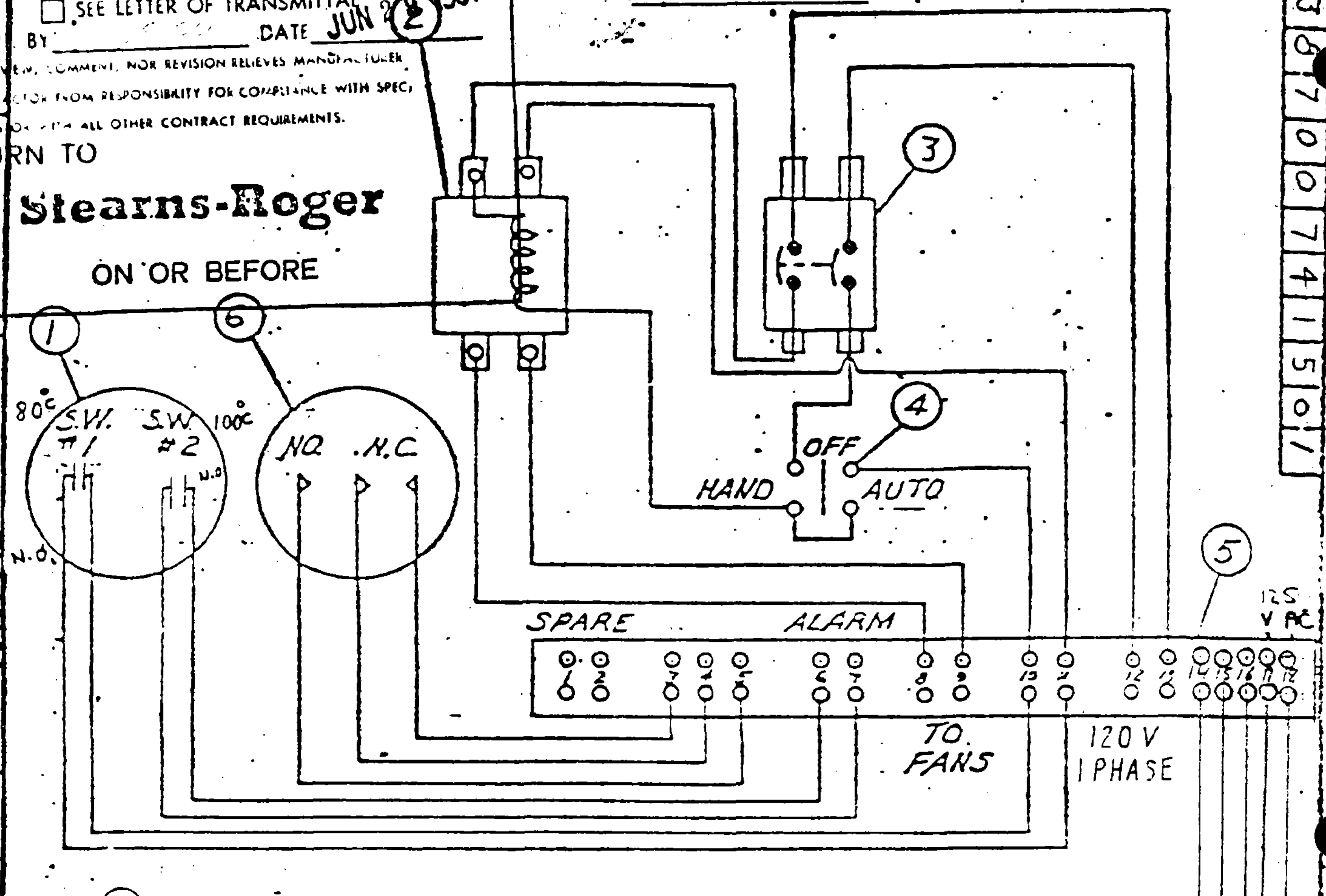

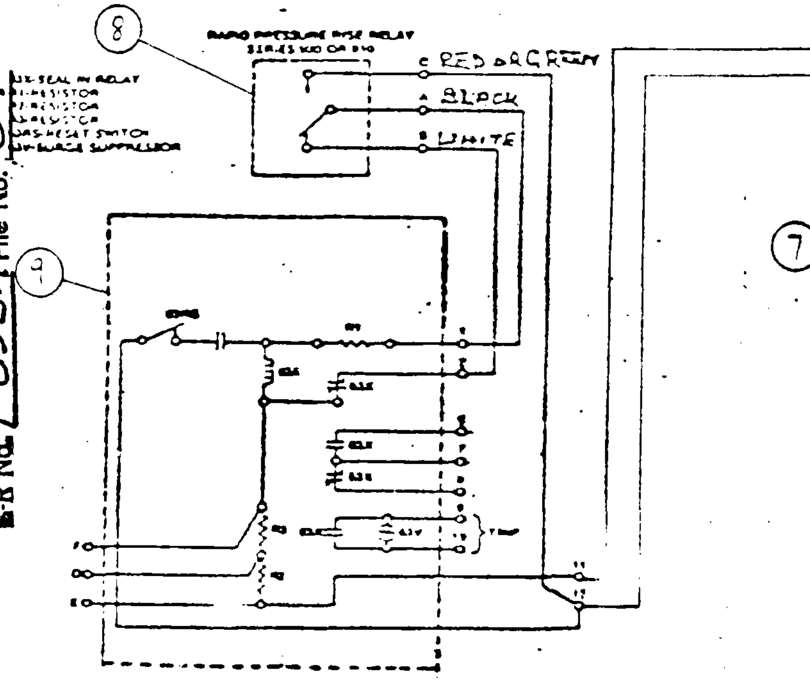

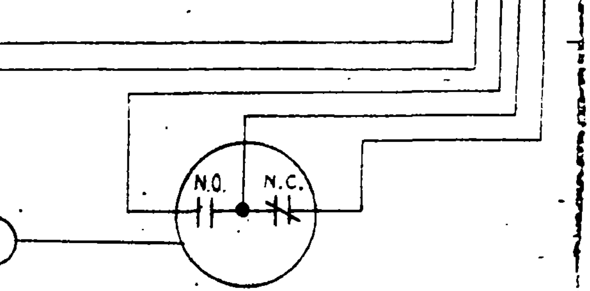

ITEM	DESCRIPTION
1	THEMOMETER
2	CONTACTOR
3	BREAKER-2 POLE 20 AMPS
4	HAND-OFF-AUTO SWITCH
5	TERMINAL BLOCK
6	OIL GAUGE
7	PRESSURE RELIEF DEVICE
8	SUDDEN PRESSURE RELAY
9	SEAL-IN RELAY

92133

DWN. U.M. ENLOE
CHKD.
APPR.
DATE 9-11-80

THE STANDARD TRANSFORMER CO.
WARREN, OHIO
U.S.A.

FAN-CONTROL
CONN. DIAGRAM

0 1 3 8 7 0 0 7 4 1 7 0 1

3 1 3 8 7 0 0 7 4 1 5 0 1

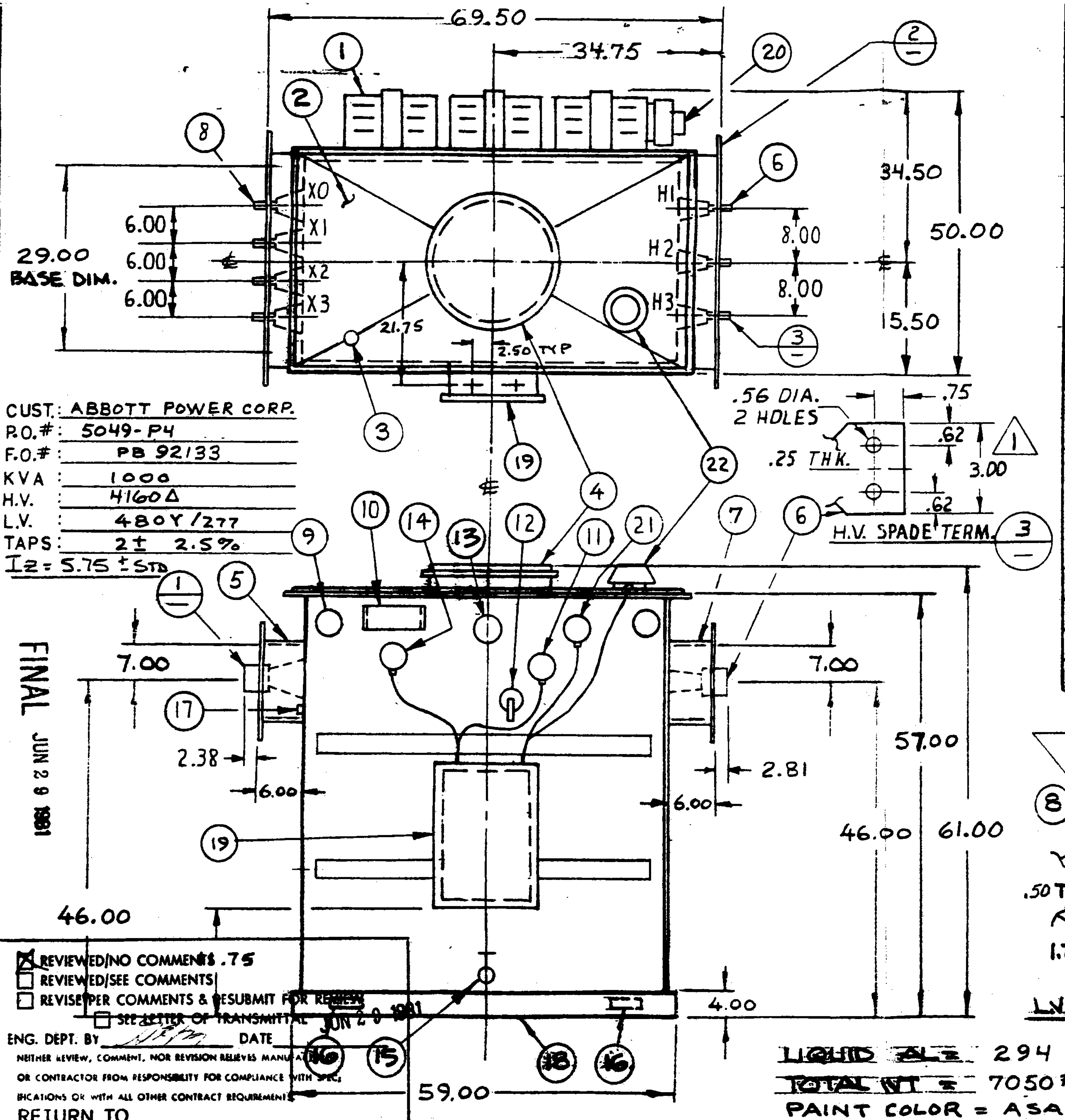

ITEM	DESCRIPTION
1	COOLING PANELS
2	WELDED-ON COVER W/PROVISION FOR LIFTING
3	1" UPPER FILTER PRESS CONN. & FILL PIPE
4	16" DIA HANDHOLE WITH BOLTED COVER
5	H.V. THROAT - SEE DETAIL 2
6	H.V. BUSHING WITH 2 HOLE SPADE - SEE DETAIL
7	L.V. THROAT - ~~SEE DETAIL 2~~
8	L.V. BUSHING WITH SPADE TERMINAL. SEE DETAIL
9	LIFT LUGS
10	STAINLESS STEEL NAMEPLATE & CONNECTION DIAGRAM
11	LIQUID LEVEL GAUGE WITH CONTACTS
12	NO-LOAD TAP CHANGER WITH PROVISION FOR PADLOCK
13	PRESSURE VACUUM GAUGE
14	DIAL-TYPE THERMOMETER WITH CONTACTS
15	1" DRAIN VALVE-FILTER PRESSURE CONNECTION & SAMPLER
16	GROUND PAD WITH (2) ½-13 TAPPED HOLES
17	½-13 TAPPED GROUND PAD BELOW X₀
18	FORMED BASE SUITABLE FOR JACKING, SKIDDING & PULLG
19	AUX. WIRING CABINET
20	COOLING FAN
21	RAPID RISE PRESSURE RELAY WITH CONTACTS
22	PRESSURE RELIEF DEVICE WITH CONTACTS

CUST.: ABBOTT POWER CORP.
P.O.#: 5049-P4
F.O.#: PB 92133
KVA: 1000
H.V.: 4160Δ
L.V.: 480Y/277
TAPS: 2± 2.5%
Iz = 5.75 ± STD

Certified as True Data by Mike Dickinson
Mike Dickinson
Sr. Design Engineer
Date 6/5/81

FINAL JUN 29 1981

1 REVISED CHANGE H.V. BUSHINGS

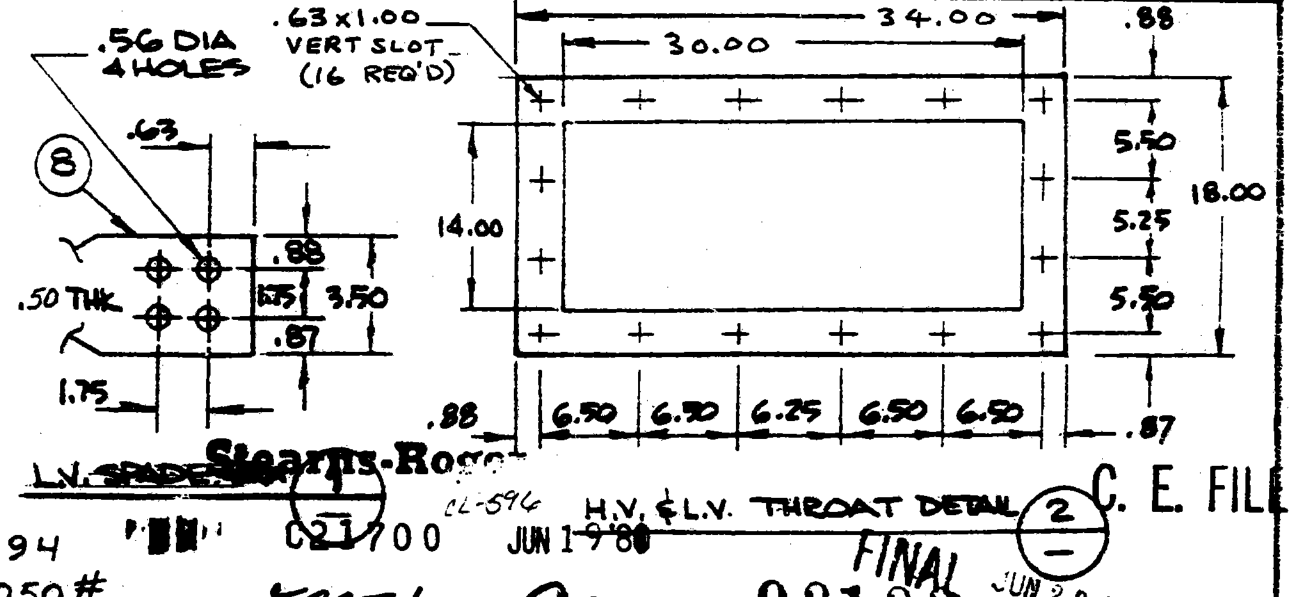

☒ REVIEWED/NO COMMENTS
☐ REVIEWED/SEE COMMENTS
☐ REVISE PER COMMENTS & RESUBMIT FOR REVIEW
☐ SEE LETTER OF TRANSMITTAL
JUN 20 1981
ENG. DEPT. BY ______ DATE ______
NEITHER REVIEW, COMMENT, NOR REVISION RELIEVES MANUFACTURER OR CONTRACTOR FROM RESPONSIBILITY FOR COMPLIANCE WITH SPECIFICATIONS OR WITH ALL OTHER CONTRACT REQUIREMENTS
RETURN TO
Stearns-Roger
ON OR BEFORE

Stearns-Roger
C21700 JUN 19 '80
CL-596
C. E. FILE

LIQUID ~~AL~~ = 294
TOTAL WT = 7050#
PAINT COLOR = ASA 70
E-R No. F235.1 File No. 90
FINAL JUN 29 1981
92133

Stearns-Roger BALTEAU STANDARD INC. 6001 TABLE ROCK ROAD, MEDFORD, OREGON 97501	TITLE OUTLINE DIMENSIONS SECONDARY SUBSTATION F.O.# PB92133 1000 KVA 65 °C RISE OA/FA	DRAWN R. Kappel DATE 9-24-80	CHKD E/K APPR. MO
		SCALE: N.T.S. TOLERANCE: ±.25	0960000580312 SHEET 1 OF 1

3.2.2-113

3. 2 POWER CONTROL CENTERS

3. 2. 4 TSS MAIN OIL PUMP CONTROLLER

3. 2. 4.1 Identification

Tag Number	Description
( )	TSS Main Oil Pump Controller (Speed Variator)

3. 2. 4.2 Description

Manufacturer : General Electric, Erie, Pennsylvania

Part Number : AF-400

Specification No. : GE Instruction GEK-82003 (following)

Material : N/A

Weight : N/A

3. 2. 4.3 Prescribed Service

3. 2. 4.4 Vendor Paul Armstrong, South Pasadena, Calif.

3. 2. 4.5 Special Cautions

See GE Instruction GEK-82003 (following)

3. 2. 4.6 Periodic Service

See GE Instruction GEK-82003 (following)

3. 2. 4.7 Parts List

See GE Instruction GEK-82003 (following)

3. 2. 4.8 Special Tools

See GE Instruction GEK-82003 (following)

3. 2. 4.9 Maintenance Instructions

See GE Instruction GEK-82003 (following)

3. 2. 4.10 Acceptance Tests

See GE Instruction GEK-82003 (following)

WP0167P-1

GENERAL ELECTRIC

speed variator*

INSTRUCTIONS

GEK- 82003

SPEED VARIATOR

MODEL 6V200B5079

for

INVERTER DRIVE

furnished

PAUL L. ARMSTRONG COMPANY, INCORPORATED
1134 EL CENTRO STREET
P. O. BOX 928
SOUTH PASADENA, CALIFORNIA 91030

SV-356 (4-76)

PURCHASER'S ORDER NO. LAD-969-1

G-E REQUISTION NO. 480-02818-2 IS049

December 23, 1980

* Trade-mark of General Electric Company.

SPEED VARIATOR DEPARTMENT
3.2.4-2

ERIE, PENNSYLVANIA

LIST OF EQUIPMENT

FOR

SPEED VARIATOR DRIVE

480-02818-2

ITEM 1 - SPEED VARIATOR POWER UNIT

4 - Model 6V200B5079 - 200 KVA, 460 Volts, 250 Amps, 60 Hertz, 3 Phase AF3123 Power Unit
    Outline - 36C774238BC -
    Diagrams - 36B598459; 36D870755 PRINTS
    Instructions - Adj. Freq. & Regulator Sht. (GEK 82003) GENR'L
    Misc. Comp. Inst. - GEH 3035, GEH 3246, GEH 3645, GEH 4115, CNTR'L
    GEK 33276, GEK 33278 - Transformer CNTR'L

GENERAL

INSTRUCTIONS

adjustable frequency drive

CUSTOM INSTRUCTION BOOK NO. GEK-82003

☒ INVERTERS, GENERAL AF400	GEK–24982
☐ INVERTERS, PARALLEL SUPPLEMENT	GEK–24983
☒ DRIVER, STANDARD	GEK–62515
☐ DRIVER, (PARALLEL)	GEK–62516
☐ INVERTER ASSEMBLY (100 KVA)	GEK–62517
☒ INVERTER ASSEMBLY (200 KVA)	GEK–62518
☐ INVERTER ASSEMBLY (400 KVA)	GEK–62519

REGULATOR INSTRUCTIONS

☒ AMPLIFIER (G01)	GEK–24940
☒ AMPLIFIER (G02)	GEK–24956
☒ 20 VOLT POWER SUPPLY	GEK–24941
☒ LOGIC RELAY	GEK–24943
☐ POWER UNIVERSAL AMPLIFIER	GEK–24944
☒ SIGNAL ISOLATOR	GEK–24945
☒ SIGNAL LEVEL DETECTOR	GEK–24946
☒ 20 VOLT DC RELAY	GEK–24947
☐ LOW LEVEL RELAY	GEK–24948
☐ TACHOMETER MONITOR	GEK–24949
☒ INSTRUMENT	GEK–24950
☐ DISCRIMINATOR	GEK–24951
☐ MULTIPLIER/DIVIDER	GEK–24961
☐ SOLENOID CONVERTER	GEK–24953
☒ RELAY TIME DELAY	GEK–24960
☐ DIVIDER	GEK–24962
☐ ______	______

FIRST MADE FOR 480-02818-2 DATE 12-30-80

MADE BY T. J. Haas REV. NO. 0

THE APPLICABLE INSTRUCTION BOOK SECTIONS FOR THE CUSTOM INSTRUCTION BOOK ARE INDICATED BY "X".

SV-346D (9-77)

GENERAL ELECTRIC

INSTRUCTIONS

GEK-24982

ERRATA SHEET NUMBER 01
APRIL, 19

AF—400*

AC ADJUSTABLE SPEED DRIVE

ERRATA SHEET AFFECTS GEK-24982, PAGES 36 AND 38.

This Errata Sheet should be attached inside the front cover of GEK-24982 and retained as part of this book.

Correct following paragraphs to read as follows:

PAGE 36
Col. 1, Para. 2

With the DC Link disconnected between P1 and P11, the drive can be started and the inverter operated up to ***HALF REFERENCE ONLY***. With the motor disconnected from the inverter, the P11 to P2 DC Link voltage will build up somewhat as the reference is increased. With the motor connected to the inverter, the DC link will stay close to zero. The maximum inverter frequency that can be obtained at ***HALF*** reference will be limited to less than half of rated by the below normal DC Link voltage. Except for these differences from normal, the inverter can be operated to check out the inverter SCR firing and commutation operation without danger of further damaging the equipment if a fault problem is present. In addition, by disconnecting the plugs of two of the three wire harnesses APL, BPL or CPL, just one phase module can be operated at a time to simplify checking and help in pinpointing the problem.

PAGE 38
Col. 1, Para. 1

With the DC Link disconnected between P1 and P11, and ***THE EPL PLUG DISCONNECTED AT THE COMMUTATION PS (NOT AT THE DRIVER). THE DRIVE CAN BE STARTED AND THE CONVERTER OPERATED UP TO FULL REFERENCE AND VOLTAGE.*** This will occur at full reference if the P1 control wire (for converter voltage feedback) has been connected to the Converter Module P1 terminal. The inverter will operate also, but at a low voltage and reduced frequency, with or without the motor connected.

---

* Trademark of General Electric Company, U.S.A.

GENERAL ELECTRIC

INSTRUCTIONS **GEK-24982**

AF-400 *
AC ADJUSTABLE SPEED DRIVE

INSTALLATION

DESCRIPTION

START-UP

TROUBLESHOOTING

MAINTENANCE

* Trademark of General Electric Company U.S.A.

GENERAL ELECTRIC

TABLE OF CONTENTS

Page

- GENERAL . . . 1
  - Introduction . . . 1
  - Receiving, Handling and Storage . . . 1
  - Safety Recommendations . . . 1
- INSTALLATION . . . 2
  - Location . . . 2
  - Mounting . . . 2
  - Electrical Wiring and Interconnections . . . 2
- DESCRIPTION . . . 4
  - Converter Module . . . 4
  - DC Link Filter . . . 4
  - Inverter Modules . . . 4
  - Commutation Power Supply . . . 5
  - Protection and Cooling . . . 5
  - System Control . . . 5
  - Driver Module . . . 6
    - System Card . . . 6
    - Regulator Card . . . 6
    - Converter Card . . . 8
    - Inverter Card . . . 8
    - Phase Logic Card . . . 9
    - Power Supply Card . . . 9
    - Meter Card . . . 10
  - Power Module Control Cards . . . 10
- START–UP and CHECK–OUT . . . 16
  - Test Equipment Required . . . 16
  - Testing Safety Precautions . . . 16
  - Power–off Continuity Test . . . 17
  - Driver Selections . . . 17
  - Inverter Phase Module Selection . . . 17
  - Start–up Procedure . . . 18
- ADJUSTMENTS . . . 21
- TROUBLESHOOTING . . . 23
  - Test Equipment Required . . . 23
  - Testing Safety Precautions . . . 23
  - Fault Indication . . . 24
  - Fault Indicating Lights . . . 24
  - Driver Troubleshooting . . . 25
  - Commutation Power Supply Troubleshooting 33
  - Inverter Module Troubleshooting . . . 35
  - Converter Module Troubleshooting . . . 37
  - Checking SCR's . . . 39
  - DC Link Filter Troubleshooting . . . 40
  - Miscellaneous Troubleshooting Checks . 41

Page

- MAINTENANCE AND REPAIR . . . 45
  - Mechanical and Electrical Inspection . . . 45
  - Power Module Repair . . . 45
    - Inverter Phase Module Replacement (125 to 400 KVA) . . . 45
    - Press–Pak Cell Replacement – Phase Module . . . 47
    - Converter Module Replacement – (125 to 400 KVA) . . . 48
    - Press–Pak SCR Replacement – Converter Module . . . 49
    - Converter and Inverter Module Repair (30 to 100 KVA) . . . 50
  - Commutation Power Supply Repair . . . 51
  - Filter Capacitor Replacement . . . 52
  - Blower Replacement (125 to 400 KVA) . . 53
  - Fan Replacement (30 to 100 KVA) . . . 54

LIST OF ILLUSTRATIONS

Figure		Page
1	AF–400 Power Unit Interior – 300 KVA.	11
2	AF–400 Power Unit Interior – 100 KVA	12
3	AF–400 System Block Diagram	13
4	AF–400 Power Circuit	14
5	AF–400 Functional Block Diagram	15
6	Inverter Commutation Current Wave Shape	42
7	Motor Current Wave Shape	42
8	Converter Firing Signals	43
9	Inverter Firing Siganls	43
10	Pulse Transformer Card Pulse Wave Shape	44
11	Removing an Inverter Phase Module	46
12	Repairing an Inverter Phase Module	46
13	Repairing a Converter Module	46

GENERAL

INTRODUCTION

This instruction manual is structured around a basic drive. It is a guide for the installation, checkout and operation of the equipment furnished with general troubleshooting procedures for the basic drive. Any special purpose equipment, as requested on the order, will normally be covered in the schematic drawings included with this package. These instructions do not purport to cover all details or variations in the equipment nor to provide for every possible contingency to be met in connection with the installation, operation or maintenance. Should further information be desired or should particular problems arise which are not covered sufficiently for the purchaser's purpose the matter should be referred to General Electric Company.

RECEIVING

The equipment should be placed under adequate cover immediately upon receipt as packing is not suitable for out–of–doors or unprotected storage.

All equipment is factory inspected before shipment and is shipped in good condition. Any damages or shortages evident when the equipment is received must be immediately reported to the commercial carrier who transported the equipment. If required, assistance may be received from General Electric Company, Speed Variator Products Operation, Erie, PA. When seeking assistance, please use the purchase order number, requisition number, and model number to help us in assisting you. Telephone 814–455–3219.

HANDLING

Power units can be transported by lift trucks with the forks completely under the wooden shipping base. Crane lifting eyelets are supplied on the top of the unit for handling by a crane. A spreader bar must be used when lifting from above.

WARNING

IMPROPER LIFTING PRACTICES CAN CAUSE SERIOUS OR FATAL INJURY.

LIFT ONLY WITH ADEQUATE EQUIPMENT AND TRAINED PERSONNEL.

STORAGE

This equipment may be stored at ambient temperature of −20°C to +40°C for a period of up to one year. Air must be free of chemical and electrically conductive contaminants, and other conditions must be such that no moisture condensation occurs in or on the equipment.

In addition, when a control that has been in operation is shut down for either a short or extended period of time, it is recommended the environmental conditions be maintained the same as when in operation.

It is recommended that space heaters or equivalent devices be used to maintain the equipment in its normal operating environment (temperature).

The electrolytic filter capacitors require "forming" after a six month or longer storage period without being energized. It is necessary to form the capacitors to prevent excessive leakage which can result in capacitor failure. The procedure for forming the filter capacitor is given in step 13 of the Start–up Instructions.

SAFETY RECOMMENDATIONS

Only qualified electrical and electronics personnel should install and maintain this equipment. They should read the complete instructions prior to applying power or troubleshooting the equipment. They should heed all WARNING and CAUTION notes or labels listed in this Manual or posted on the equipment. Definitions of label terms and colors are as follows:

WARNING

DENOTES OPERATING PROCEDURES AND PRACTICES THAT MAY RESULT IN PERSONAL INJURY OR LOSS OF LIFE IF NOT CORRECTLY FOLLOWED.

COLOR: BLACK OR WHITE LETTERING ON RED FIELD

CAUTION

DENOTES OPERATING PROCEDURES AND PRACTICES THAT, IF NOT STRICTLY OBSERVED, MAY RESULT IN DAMAGE TO, OR DESTRUCTION OF, THE EQUIPMENT.

COLOR: BLACK LETTERING ON AMBER FIELD.

INSTALLATION

LOCATION

AF–400* drive power units are suitable for most factory areas where other industrial equipment is installed. They should be installed in well ventilated areas with ambient temperatures ranging from 10°C (50°F) to 40°C (104°F) and relative humidities up to 90%. It should be recognized, however, that since the life expectancy of any electronic component decreases with increased ambient temperature, reduction of the ambient temperature will bring about extended component life. For example, longer component life should be expected if the ambient temperature is held between 20°C (68°F) and 30°C (87°F).

Proper performance and normal operational life can be expected by maintaining a proper environment for the drive system. Environments which include excessive amounts of one or more of the following characteristics should be considered hostile to drive performance and life:

1. Dirt, dust and foreign matter.
2. Vibration and shock.
3. Moisture and vapors
4. Temperature excursions.
5. Caustic fumes.
6. Power line fluctuations.
7. Electromagnetic interference (noise).

WARNING

EQUIPMENT SHOULD NEVER BE INSTALLED WHERE HAZARDOUS, INFLAMABLE OR COMBUSTIBLE VAPORS OR DUSTS ARE PRESENT. SUFFICIENT CLEARANCE IN FRONT OF THE UNITS SHOULD BE ALLOWED FOR ACCESS FOR MAINTENANCE OR REPAIR.

MOUNTING

POWER UNIT

Cases may be bolted down using 3/8" diameter mounting bolts or studs. If studs are cast in floor, they should extend 3–1/2" minimum above floor. Conduit entry openings through the base are fitted with reremovable sheet steel covers. Other conduit entry area is available through the top of the case.

CAUTION

IF CONDUIT ENTRY OPENINGS ARE TO BE CUT IN THE TOP OF THE CASE, ADEQUATE PRECAUTIONS SHOULD BE TAKEN TO PREVENT METAL PARTICLES FROM ENTERING DEVICES AND COMPONENTS.

OPERATOR'S STATION

The Operator's Station must be disassembled for mounting and wiring. First, remove the screws securing the cover to the Operator's Station enclosure and then remove the cover (with control devices mounted on the cover) from the enclosure.

When using either rigid or thin wall conduits, it is generally easier to attach the unit to the end of the conduit before locating and installing the mounting screws.

Mount the Operator's Station on any firm, reasonably flat, vertical surface by means of mounting holes in both top back and bottom back of enclosure. The Operator's Station is suitable for either wood screws or No. 10 machine screws.

AC MOTOR(S)

A separate instruction book is provided giving information on location, conduit location and mounting of the motor(s). The motor(s) should be mounted on the driven machine (or as appropriate for the installation) before proceeding with wiring, set up and adjustment.

ELECTRICAL WIRING & INTERCONNECTIONS

All wiring shall be in accordance with the National Electrical Code and be consistent with all local codes. All internal electrical connections between components in the power units are made at the factory. When installing AF–400 drives, all connections should be checked for tightness. Connections may become loose in shipping or storage. A diagram showing the connections between the power unit and the related components is furnished with the equipment. All terminals to which the external connections are to be made are numbered on the diagram. The equipment should be wired as per the elementary diagram and verified by continuity tests. It is recommended that as each connection or wire is connected to the equipment, it be checked off on the elementary diagram.

---

* Trademark of General Electric Company U.S.A.

WARNING

ALL MOTOR BASES AND EQUIPMENT ENCLOSURES SHOULD BE CONNECTED TO THE FACTORY OR FACILITY EARTH GROUNDING SYSTEM.

MOTOR(S) CONNECTIONS

The motor(s) leads should be connected for the drive nameplate voltage rating according to the connection diagram plate on the motor(s). Connecting wire sizes and motor protection should be selected in accordance with NEC Standards based on the motor(s) nameplate data. Be sure to connect motor thermal switch (if supplied) back to the power unit. Tape all motor connections.

POWER UNIT CONNECTIONS

Electrical codes generally require the use of a fused disconnecting switch or circuit breaker in the a–c power line ahead of the power unit and transformer (if used). The disconnecting switch and fuse (or circuit breaker) should be selected in accordance with the National Electrical Code and/or local code requirements based on the power input data on the power unit nameplate. If any additional relays, solenoids, brakes, etc. are added to the system, R.C. suppression networks must be added across the coils, (.5uf, 220 ohms @ 115/230V).

OPERATOR'S STATION CONNECTION

Using the elementary diagram, make all the required wiring connections between devices in the Operator's Station and the connections to the power unit. Re–assemble the Operator's Station. Carefully dress the interconnecting wire into the back of the station so that the device assembly may be installed. Keep the wires away from sharp edges and do not force the device assembly into place. Replace the station cover and secure with cover retaining screws.

DESCRIPTION

The AF–400 is an adjustable frequency a.c. motor drive designed for industrial applications. Either single motor or multi–motor operation from a single power unit can be accomplished. Adjustment of motor speed is achieved by changing both motor frequency and voltage. This is accomplished in separate sections of the drive, since the AF–400 is a variable voltage d.c. link type of inverter.

The various modules and components to be described are physically located in the AF–400 power unit as shown in Figures 1 and 2, for two different KVA ratings. These modules and components are also shown in the system block diagram of Figure 3. Following is a description and operating explanation of each system block, starting with the power blocks and finishing with the control blocks.

CONVERTER MODULE

The converter module is a three phase, full wave controlled rectifier which converts the incoming three phase a.c. power to variable voltage d.c. power. The six SCR converter is shown in more detail in the power circuit of Figure 4. The three saturable chokes 1L, 2L, and 3L in the incoming phases plus the SCR snubber circuits (not shown) act to protect the converter SCR's against voltage transients. The converter d.c. output voltage can be adjusted from zero to maximum output by adjusting the firing point of each SCR relative to its a.c. supply phase voltage. The resultant d.c. output voltage, therefore, contains a six times a.c. supply frequency ripple component of voltage. This ripple voltage must be filtered to improve the waveform before being applied to the inverter section.

DC LINK FILTER

An iron core reactor L1 and a bank of electrolytic capacitors C1 act as an LC filter in the d.c. link, as shown in Figure 4. In addition to filtering the output of the converter, it also prevents inverter commutation transients from being applied back to the converter. The C1 capacitor also acts to supply motor reactive power.

INVERTER MODULES

The three phase inverter consists of three identical single phase inverter modules, as shown in Figures 3 and 4. Each module consists of two inverter SCRs, two commutating SCRs, two bypass diodes and an LC commutating circuit. Output phase A (T1) of Figure 4 will be described, since all three phases operate in an identical manner, except for being displaced by 120 degrees in phase relationship.

The a.c. motor lead T1 is alternately connected to the positive P11 d.c. bus or the negative P2 d.c. bus, by inverter SCR's ISPA or ISNA respectively. The frequency that terminal T1 is alternately connected to the two d.c. potentials is the fundamental frequency applied to the a.c. motor, which determines its speed.

Although an SCR can readily be turned on by applying a firing signal to its gate, it must be commutated off by supplying an alternate path for the current which was flowing through the SCR, and by applying a small reverse voltage to the SCR for a short period of time. This is accomplished by means of the commutating SCR's CSPA and CSNA, and by the commutating reactor LCA and commutating capacitor CCA.

At the time when inverter SCR ISPA is to be commutated off, capacitor CCA is charged such that the T1 side is positive. When commutating SCR CSPA is fired, the motor current flowing through ISPA is diverted to the alternate path of CSPA, CLPA, LCA and CCA due to the voltage charge on CCA. When the commutating current in this alternate path exceeds the motor current, no more current exists in ISPA. As capacitor CCA discharges further, the excess commutating current (above the motor current level) flows through the ILPA and diode DPA back to CSPA. The voltage drop across DPA produces a small reverse voltage across ISPA to cause it to return to its blocking or off state. Therefore, for successful commutation, the commutation current must exceed the motor current for the amount of turn–off time requried for the SCR. In order to minimize this time and the commutating energy requried, special inverter grade SCR's are used which have a short turn–off time.

The commutating current pulse takes the form of a half cycle sine wave because of the interaction of capacitor CCA with reactor LCA. After the commutating current peaks and starts diminishing, the charge on capacitor CCA reverses, and the energy stored in reactor LCA charges CCA up in the opposite direction. At the point in time when the commutating current falls below the level of the motor current, the current in diode DPA goes to zero and the potential of the T1 motor lead changes from the inverter positive bus P11 to the negative bus P2 so that diode DNA can furnish the

INVERTER MODULES (continued)

motor current. The above action occurs if the on-coming inverter SCR ISNA is not fired before this point in time. If ISNA is fired earlier, the transition of T1 from positive to negative bus will occur earlier in the commutation interval. In any case, capacitor CCA becomes charged up in the opposite direction (T1 side negative) at the end of the ISPA commutation interval. It is now charged correctly to commutate off inverter SCR ISNA when commutating SCR CSNA is fired. This commutating action is the same as the one just described. At the end of each commutating interval, the commutating SCR is commutated off by the charge on capacitor CCA producing a reverse voltage to the commutating SCR which had just been conducting.

The four leg reactors, CLPA, CLNA, ILPA and ILNA act in conjunction with the SCR snubber circuits (not shown in Figure 4) to limit dv/dt and protect the SCR's against voltage transients. The leg reactors also serve to limit current if an inverter fault should occur.

The commutation losses, although small in relation to the total commutation energy, must be replaced in order to keep the commutation capacitor charged up to the proper voltage. These losses are replaced from the variable voltage d.c. link (P11 to P2) when it is near its maximum value. The amount of energy replaced, and thus the level of the commutation capacitor voltage, is determined by the firing point of the oncoming inverter SCR in the commutation interval. As the d.c. link voltage is reduced down to zero voltage however, the commutation losses are replaced from another source, the commutation power supply.

COMMUTATION POWER SUPPLY

This module contains six SCR's and six diodes (only three of each on 230V AC drives where seriesing is not required), plus three reactors, an RC filter and protective fuses. These devices are all relatively small since the commutating losses this module furnishes are a very small percentage of the drive rating.

The diodes, AD1, AD2 and AD3 in Figure 4, form a three phase half wave bridge which operates in conjunction with the negative SCR portion of the converter to provide a constant voltage bus relative to d.c. link bus P2. This d.c. supply is filtered by resistor RA and capacitor CFA and applied to SCR's ASA, ASB and ASC, one for each phase of the inverter. The reactors LXA, LXB and LXC limit the maximum current through the SCRs to only about one–eighth of the commutating current level of the inverter.

The amount of energy furnished by the commutation power supply to each inverter phase commutation circuit depends on the level of the d.c. link voltage and on the point in the commutation interval when the appropriate commutation power supply SCR is fired. Since the energy loss per commutation is small, the losses are replaced only every other commutation in each phase; that is, only during each positive inverter SCR commutation in each phase. SCR ASA is fired at the same time as inverter SCR ISNA is first fired. ASB at the same time as ISNB, and ASC at the same time as ISNC. In this manner the driver regulates the commutating current and voltage over the whole d.c. link voltage operating range, irrespective of how much of the commutating losses are supplied from the commutating power supply or from the d.c. link.

PROTECTION AND COOLING

Drive short circuit protection is provided by current limiting fuses in the a.c. supply. An incoming circuit breaker can be supplied (if ordered) to provide both a.c. disconnection and short circuit protection.

Power unit cooling is provided by a fan for small power ratings and by multiple blowers for larger power ratings. These are mounted together with an air distribution chamber at the bottom of the power unit case, as shown in Fig. 1 and 2. All fan or blower motors are three phase and are protected with fuses. Correct fan or blower rotation depends on the a.c. supply phase sequence. The same wrong phase sequence fault circuit that prevents drive operation also will prevent incorrect fan or blower rotation. A thermoswitch, which opens on an overtemperature condition, is placed in the cooling air stream to detect fan or blower failure. This switch may be connected either to shut down the drive or sound an alarm.

SYSTEM CONTROL

The system control and associated operators devices will vary considerably depending on the application of the drive. Refer to the system elementary diagrams and instructions for description of your particular drive system.

DRIVER MODULE

The driver takes the operator and system control commands and translates them into SCR firing signals to the various power modules to obtain the commanded drive operation. It makes use of several voltage and current feedbacks to monitor the commanded operation, and to protect the drive from misoperation and fault conditions. It contains adjusting means to provide the desired operating performance. It also contains indicating lights to provide visual indication of operating or fault conditions. Finally, it provides a number of signal readouts to alert the system control of various operating and fault conditions.

The driver rack shown in Figures 1 and 2 is the same for all non–paralleled drive ratings. It contains five control cards plus a power supply card and associated control power transformer. In addition, the optional meter card can be provided (if ordered) for drive set–up and diagnostics. All cards are plug–in type for ease of replacement. Inter–connections between driver and all power modules is by wire harnesses which plug into receptacles at both ends. All inputs, selections and readouts are connected to the driver terminal boards. Refer to the driver elementary and connection diagrams for driver inputs and outputs, and for card layout and interconnections.

A functional block diagram of the driver is shown in Figure 5. A more detailed description of the driver functions on each card, plus signal flow, is given under the following card headings. Also refer to the "Driver Notes" on the driver elementary diagram for detailed information on inputs, feedbacks, adjustments, readouts, etc.

SYSTEM CARD

The system card consists mainly of logic elements, and acts as the logic interface between the system control and the driver.

The Start–Stop logic insures that starting occurs at minimum frequency and voltage, and that acceleration to the reference input is through the timed acceleration circuit. Stopping is accomplished by first decelerating at the set timed rate until a low voltage level is reached, at which time the inverter is stopped

An ODMF input provides a special decelerate to minimum frequency operation, from the set reference level, without stopping the inverter, the deceleration occuring at a faster than set timed rate. The a.c. motor can be connected to the inverter at this minimum frequency operating level without disturbance, and will then be accelerated to the reference level at the set timed rate when the ODMF signal is removed.

The minimum voltage and frequency detection logic contained on this card provides an OMVFRO signal readout to alert the system control when this drive condition is reached. An ORRO run readout provides a signal dependent on whether the inverter is operating or in a stopped condition. An IF indicating light on this card gives a visual idea of inverter operating frequency by its blinking frequency.

If a fault shutdown of the drive occurs due to any cause, the IFTRO readout provides a signal for the system control. Reset of the fault logic and fault indicating lights will normally occur if a normal stop operation is accomplished. However, if a separate fault reset operation is desired in addition to the OSTOP operation, the 1XFR input can be used for this purpose.

An inverse time overcurrent trip function, plus trip indicating light ITOC, is provided to shut down the drive. This operates immediately for overcurrents above 175 to 200% of rated current. For overcurrents where the current limit function on the Regulator card is limiting, the shutdown will occur in 15 seconds to 1 minute after current limiting begins, depending on the overcurrent level.

If synchronization of the inverter frequency to another frequency is desired, an OSYNC signal input will cause the inverter frequency to change from the reference level to the external frequency level, and to lock into that frequency. A digital discriminator compares the inverter frequency with the external frequency, and provides logic signals to the Regulator card to cause the inverter frequency to be synchronized to the external frequency in the correct phase relationship. When phase and frequency lock–in is achieved, a SYNC indicating light on the card lights and an OSRO inverter synchronized readout signal is provided.

REGULATOR CARD

The regulator card contains mainly analog regulating circuitry plus all of the adjustment potentiometers in the driver.

REGULATOR CARD (continued)

A midpoint control voltage level (+10 volts) is generated on this card to provide a midpoint around which the internal regulating control can swing both positive and negative. However, all input and readout control signals are relative to the control power common potential.

This card accepts the analog reference input and, except when this signal is clamped at zero or some other level by the start–stop or other logic on the System card, applies it to the linear timing circuit. This function provides separately adjustable timed acceleration and deceleration to or from the set reference level, or to a new reference level. The timing is adjustable from 2.5 to 25 seconds for a maximum reference change in either direction. A substantially faster acceleration or deceleration time than the setting can be initiated by an OFR logic signal from the System card.

An adjustable motor current limit function is provided to override the analog reference if motor current exceeds the current limit setting. This setting can be adjusted from 60% to 150% of rated drive output current. A current limit stability potentiometer CLST is adjusted depending on the motor and load inertia to obtain stable current limit operation.

The analog reference, linear timing and current limit functions are all bypassed when the inverter frequency is synchronized to an external frequency by means of logic on the System card. However, the output level of the linear timing circuit then is determined by the synchronized frequency, such that when synchronized operation is ended, the drive will return to the analog reference level at the set linear time rate.

The resultant RFV reference signal is fed to both the voltage regulator and the frequency generator in two separate paths.

The reference to the voltage regulator is affected by the adjustment of three potentiometers. The V/Hz potentiometer provides a vernier adjustment of the volts per hertz of the inverter within +15%, –5% of nominal. The voltage boost potentiometer VB adjusts the fixed amount of voltage which is added to the inverter, irrespective of frequency, to overcome the motor IR drop. It is adjustable from zero to 7% of rated voltage. The third adjustment, the voltage limit potentiometer VLIM, is an initial set-up adjustment which prevents the converter from turning completely on and saturating. This adjustment limits the maximum inverter a.c. output voltage to be slightly less than the a.c. supply voltage. This function keeps the stability–slowdown control (described later) in its regulating range, and is also important in limiting the inverter voltage when motor transfer from inverter to a.c. supply is done.

The voltage regulator compares this modified reference with a feedback signal proportional to converter d.c. output voltage which is obtained from the Converter card. The output of the voltage regulator is then fed to the Converter card as the reference signal to the phase control.

The other path of the RFV reference signal to the frequency generator is affected by the adjustment of two potentiometers and a jumper selection. The MINF potentiometer adjusts the inverter minimum frequency from 3% to 12% of set base frequency. For RFV reference levels below the set minimum frequency level, only inverter voltage is decreased. The BF potentiometer adjusts the inverter base frequency over a minimum 2 to 1 range within either of the two base frequency ranges, 37.5 to 75 Hz or 75 to 150 Hz, selected by the BFR jumper on the driver terminal board. An external base frequency adjustment potentiometer may be connected to modify the card setting by as much as plus or minus 50%, within the 150 Hz maximum frequency rating.

The frequency generator takes the analog frequency voltage signal and converts it into a pulse train whose frequency is 6 times the desired fundamental motor frequency. This frequency signal is then fed to the Inverter card. The analog frequency voltage signal input to the frequency generator is also used to provide the FVRO frequency voltage readout, which is a voltage signal proportional to actual inverter frequency.

The stability–slowdown control provides the following three functions:

1. Provides stabilizing for motors at their underdamped operating points.
2. Overrides the frequency reference, when it calls for substantially faster than motor coast slowdown, to keep the volts/Hz applied to the motor within normal limits.
3. Provides system stabilizing during slowdown and current limit operation.

REGULATOR CARD (continued)

The stability–slowdown control is only effective during analog reference operation, being locked out when the inverter frequency is synchronized to an external frequency.

CONVERTER CARD

The Converter Card controls the firing of the converter SCR's to obtain the correct d.c. link voltage to be applied to the inverter.

The three a.c. supply phase voltages are fed to this card through high impedance isolating resistors contained in the wire harness. The Converter card isolating circuits produce three voltage signals equivalent in phase relationship and magnitude to the a.c. supply phase to neutral voltages. These signals are used in the phase control to determine the correct firing points of the six converter SCR's. They are also used to detect incorrect phase sequence or loss of one or more phases, which produces a PS/LOP light indication and prevents drive operation under these conditions.

The phase control takes the Regulator card voltage regulator output and uses it in conjunction with the three a.c. line signals to generate the six converter SCR firing signals. These six firing signals are modulated by the firing oscillator signal from the Inverter card to produce pulse train signals, which are amplified and fed to the Pulse Transformer cards in the converter power module. The actual amplified firing signals are fed from a delayed firing supply from the Inverter card which delays firing signal transmission until the control has settled down after driver energization.

The converter output voltage is fed back to this card through high impedance isolating resistors in the wire harness. The isolating circuit produces a converter voltage feedback signal which is fed to the voltage regulator. on the Regulator card.

The d.c. link voltage applied to the inverter is also fed back through high impedance isolating resistors the wire harness. Its isolating circuit produces a link voltage feedback signal which is fed to the stability–slowdown circuit on the Regulator card and to the minimum voltage detection logic on the System card. It is also used to detect d.c. link overvoltage, which produces a LOV light indication and an immediate drive shutdown.

Converter firing shutdown, after a fault is detected, occurs in two steps. The first step is an immediate phase back of firing signals to the maximum retard condition to quickly reduce converter output current to zero. The second step occurs about 0.1 seconds later when all firing signals are locked out to stop converter operation.

INVERTER CARD

The Inverter card controls the inverter commutation process and provides fault detection and inverter shutdown logic.

The six times fundamental frequency pulse train generated on the Regulator card is used to initiate each commutation interval, since there are six inverter commutations per cycle. The commutation control generates the logic signals which are fed to the Phase Logic card to accomplish the following inverter firing sequence during each commutation interval:

1. Stops firing the inverter SCR to be commutated off.
2. Fires the proper commutation SCR to begin the commutation process.
3. Initiates firing of the proper commutation power supply and oncoming inverter SCRs at a point sometime after the midpoint of the commutation interval, dependent on the commutation current regulator.

The "460V Jumper" on this card produces the correct commutation timing for 460 volt inverters. This jumper must be removed for 230 volt inverters where the commutation timing is different.

The commutation current regulator affects the commutation interval firing in order to maintain the commutation capacitor voltage within the desired limits over the whole inverter operating range for proper SCR commutation. This is accomplished by monitoring the commutation current feed back from the Current Feedback cards in the inverter phase modules. The current peaks are compared to a desired level and the regulator then initiates earlier or later firing of the commutation power supply and oncoming inverter SCRs in the commutation interval to control the amount of energy added to the inverter commutation circuit. If the commutation current and voltage become too high because of excessive motor current or circuit misoperation, a commutation overcurrent

INVERTER CARD (continued)

detection circuit produces a COC light indication and an immediate drive shutdown.

The pulse train oscillator on this card produces a pulse frequency which is used to modulate the continuous firing signals generated on the Converter and Phase Logic cards. The resultant firing signals can then be applied to pulse transformers in the power modules to obtain isolation of the control from the power.

The delayed firing supply on this card is used to provide firing signal power on the Converter and Phase Logic cards. This supply is not energized until approximately 1 second after driver control power is applied so that the control logic can become operative before any SCR firing is possible. If the delayed firing supply voltage goes below a set level, an immediate drive shutdown is produced and the control undervoltage light CUV will light. If the main +20 volt control voltage goes below approximately 18 volts, it also produces an immediate drive shutdown and CUV light indication. In addition the delayed firing supply is locked out for control voltages under the shutdown level so that inadvertent SCR firing cannot occur.

A short circuit fault in any phase module of the inverter will produce a large discharge current from the d.c. link filter capacitor. This is detected by current transformer CTF and fed back to the Inverter card. When this current exceeds a set level indicating an inverter fault has occured, an immediate drive shutdown is produced and the Inverter Fault Light IFT will light. The immediate drive shutdown produced by either an inverter fault, a control undervoltage, a commutation overcurrent, or a d.c. link overvoltage causes all normal inverter firing to be locked out and produces a firing of six inverter SCRs by means of signals supplied to the Phase Logic card. This action causes the inverter to be commutated off. This immediate shutdown action, however, always causes the inverter fault light IFT to light when any of the other three faults described above occur.

The overfrequency trip function provides a drive shutdown and an IOF light indication if the inverter frequency exceeds a set limit due to any reason. This overfrequency limit is selectable by means of a driver terminal board jumper to be either 75Hz, 110Hz, 165Hz or 275Hz.

PHASE LOGIC CARD

The phase Logic card translates the Inverter card logic signals into three phase logic to control the firing of all commutation, inverter, and commutating power supply SCRs.

The six times fundamental frequency logic from the Inverter card is translated into three phase full wave logic in a positive ABC phase sequence by the Phase Logic card. This three phase logic is used to sequentially steer the six times per cycle commutation logic from the Inverter card to the proper phase SCR firing logic dependent on the three phase sequence.

Both the normal starting and stopping of inverter operation must be accomplished at a certain point in the commutation sequence in each inverter phase for proper operation. The start–stop logic performs this function on an individual phase basis. On starting, the commutating power supply SCR is fired to charge up the commutating capacitor before inverter firing begins in that phase. On stopping, the last inverter firing operation in each phase causes the commutating capacitor to be charged in the correct starting polarity in case immediate restarting is required.

The SCR firing pulse generators take power from the delayed firing supply on the Inverter card to produce firing pulses for six inverter SCRs and six commutating SCRs in the three inverter phase modules, and for three SCRs (series pairs for 460 volt drives) in the commutating power supply. The firing signals for the six inverter SCRs are half cycle long signals which are modulated by the firing oscillator pulse train from the Inverter card, whereas the other nine firing signals are single short time pulses.

The fault shutdown logic produces an immediate inverter shutdown in response to fault logic signals from the Inverter card. This logic locks out all normal inverter firing signals and produces a firing of the six inverter SCRs to produce a shoot–through commutation of the whole inverter.

POWER SUPPLY CARD

A 115 volt to 25 volt transformer in the driver provides single phase a.c. power to the Power Supply card. A full wave rectifier and filter capacitor on this card provides unregulated d.c. power to the series pass power transistors which produce the regulated +20 volt control power output. Short circuit protection is provided by a fuse while output overvoltage

POWER SUPPLY CARD (continued)

protection is provided by an overvoltage detection and crowbar circuit.

The power transistors are controlled by a regulator circuit which provides accurate +20 volt regulation from a reference zener. This zener also provides the reference for the control undervoltage trip function on the Inverter card.

This card has the provision for d.c. input supply power for a.c. power outage ride–through.

METER CARD

The optional Meter card fits into a prewired driver receptacle and is a valuable tool for drive set–up and diagnostic checkout.

This card contains a 19 position signal selector switch for connecting to the meter and test posts any one of 18 preselected and prewired signals or a back plane selector probe. The objective of the back plane probe and its associated buffer circuitry is to enable reading almost all card terminal signals without affecting driver operation. This card also contains a 3 position scale selector switch plus the necessary circuitry to enable the meter to read either a.c. rms, d.c. average, or the peak reading of any signal. These functions provide this card with the capability of reading inverter output current, peak commutating current, and peak levels of short time logic pulses, as well as the normal analog signals.

POWER MODULE CONTROL CARDS

The following two cards are mounted in the power modules and act as an interface between the driver and the power module.

CURRENT FEEDBACK CARD

One of these cards is mounted in each inverter phase module to provide a calibrated feedback of inverter commutation current and inverter output current to the motor. There are five groups of this card, with jumper selections for three different current transformer loading resistors for each group, to cover all of the inverter current ratings. This standardizes the inverter output current feedback signal at 1.0 volts rms for rated current of each inverter rating. The inverter commutation current transformer is connected to a rectifier bridge and specified loading resistor for each card group, to provide a unidirectional voltage signal. This signal peak is 12.5 volts for the desired commutation current level of each inverter rating. An additional negative commutation current loading resistor is included so that the commutation current regulator will mainly regulate the positive commutation current in each phase.

PULSE TRANSFORMER CARD

These cards are mounted on the converter and inverter phase modules and commutation power supply, one card being required for each pair of SCRs. Their major function is to provide voltage isolation between the driver control and the SCR power circuit.

Each card consists of two identical pulse transformer circuits. These provide current amplification of the actual SCR firing signals over the signals received from the driver. They also contain input noise suppression and self protection from abnormal loading.

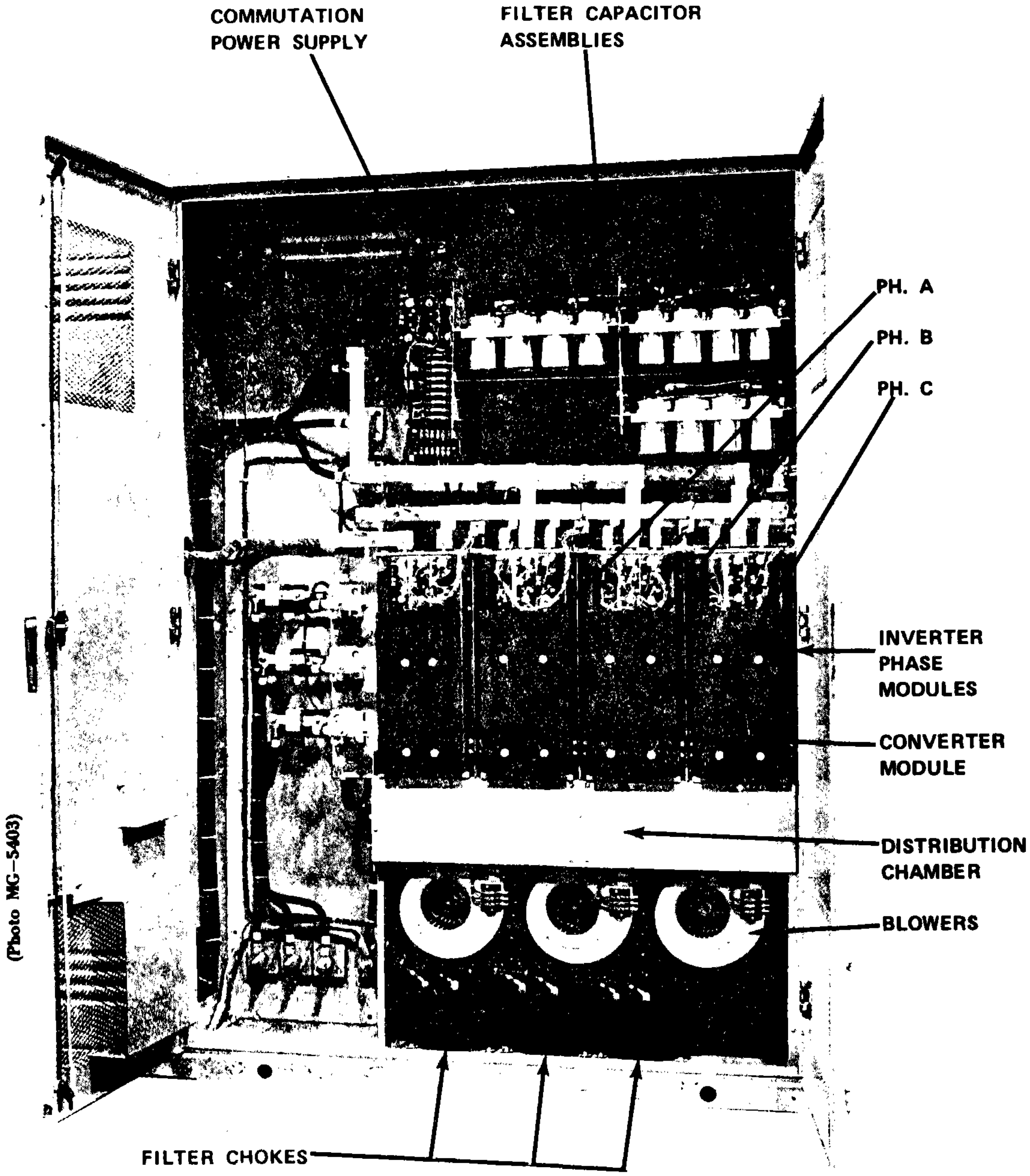

(Photo MG–5403)

FIGURE 1. AF–400 POWER UNIT INTERIOR – 300 KVA

(DRIVER LOCATED IN SEPARATE CONTROL CASE)

(PHOTO MG-5400-4)

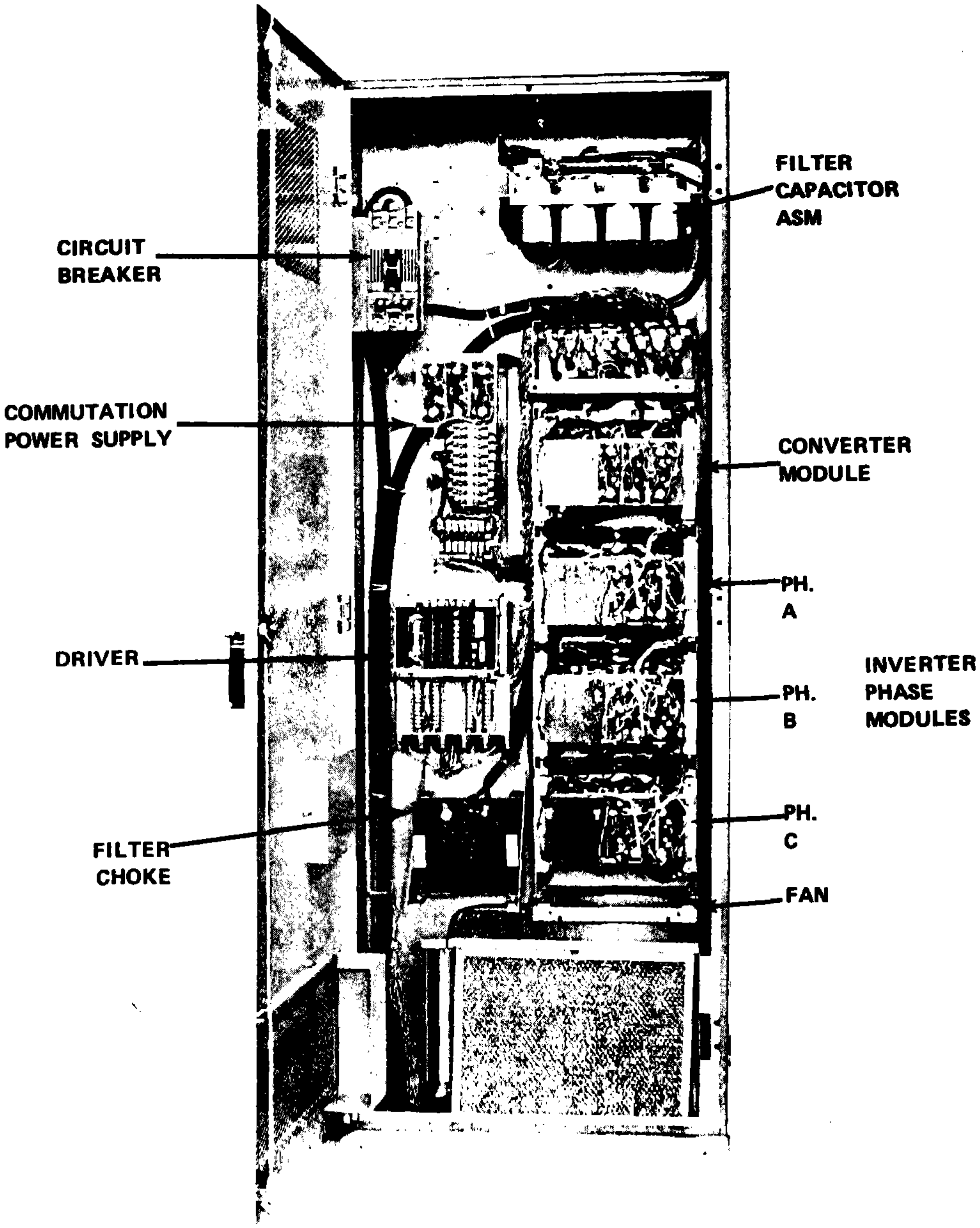

AF-400 POWER UNIT INTERIOR – 100 KVA
(WITH POWER MODULE COVER REMOVED)

FIGURE 2

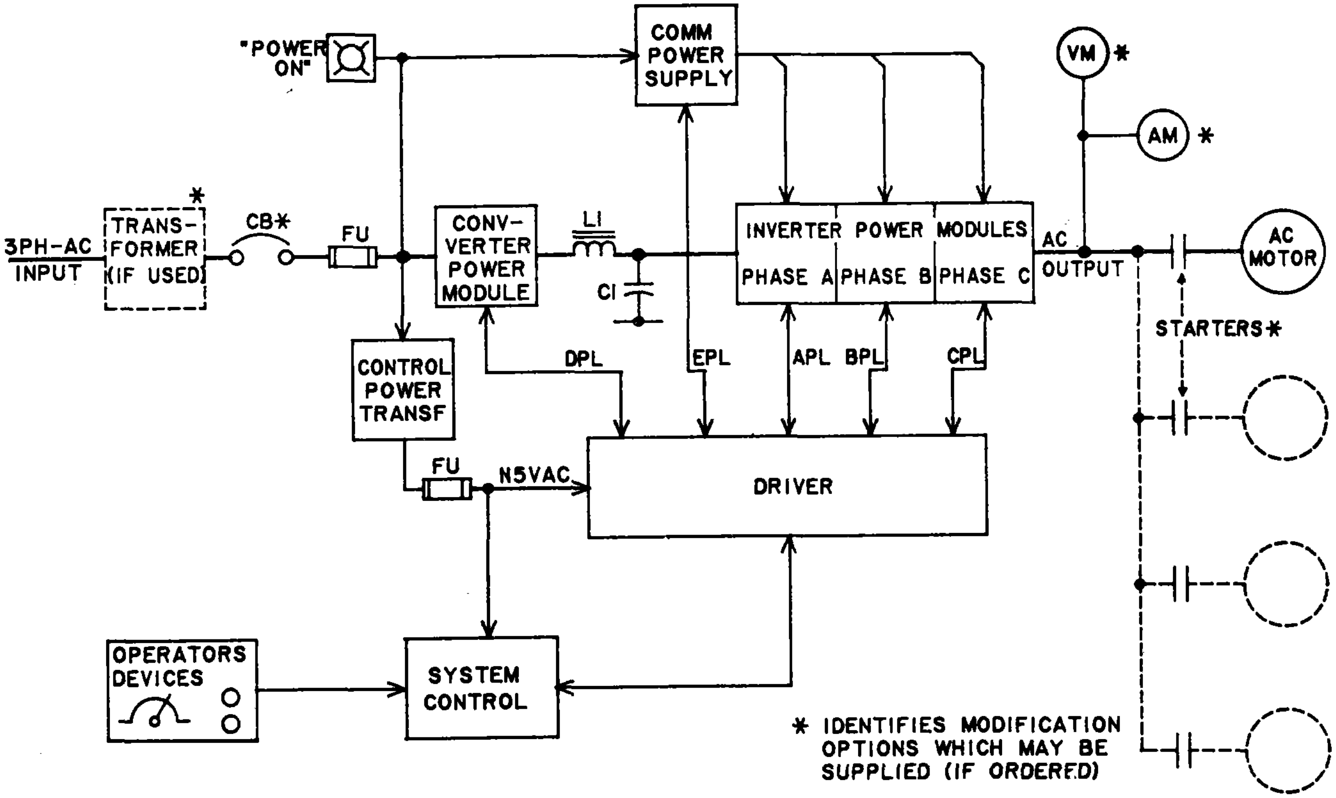

* IDENTIFIES MODIFICATION OPTIONS WHICH MAY BE SUPPLIED (IF ORDERED)

FIGURE 3. AF-400 SYSTEM BLOCK DIAGRAM ©

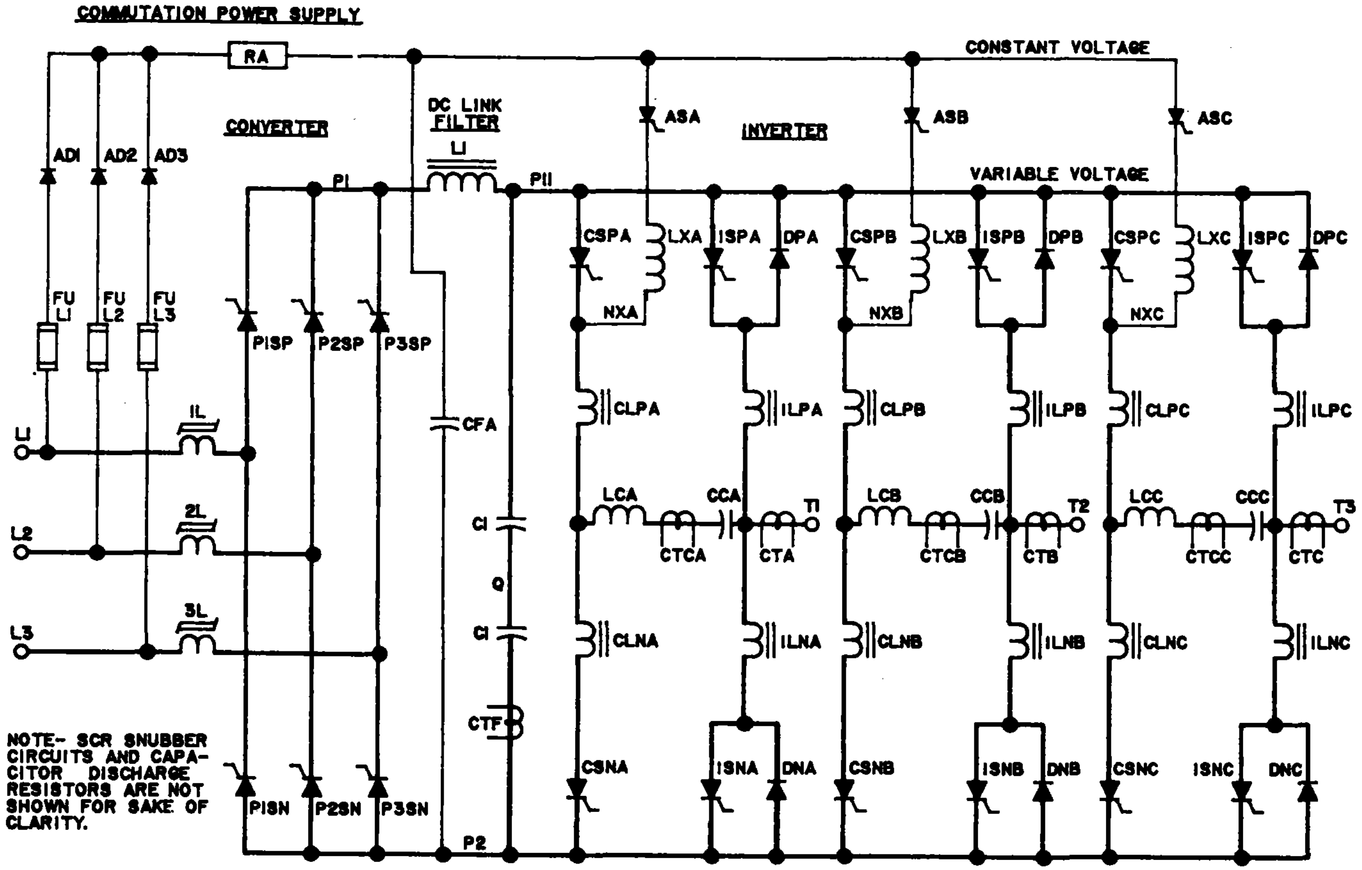

NOTE- SCR SNUBBER CIRCUITS AND CAPACITOR DISCHARGE RESISTORS ARE NOT SHOWN FOR SAKE OF CLARITY.

FIGURE 4. AF-400 POWER CIRCUIT ©

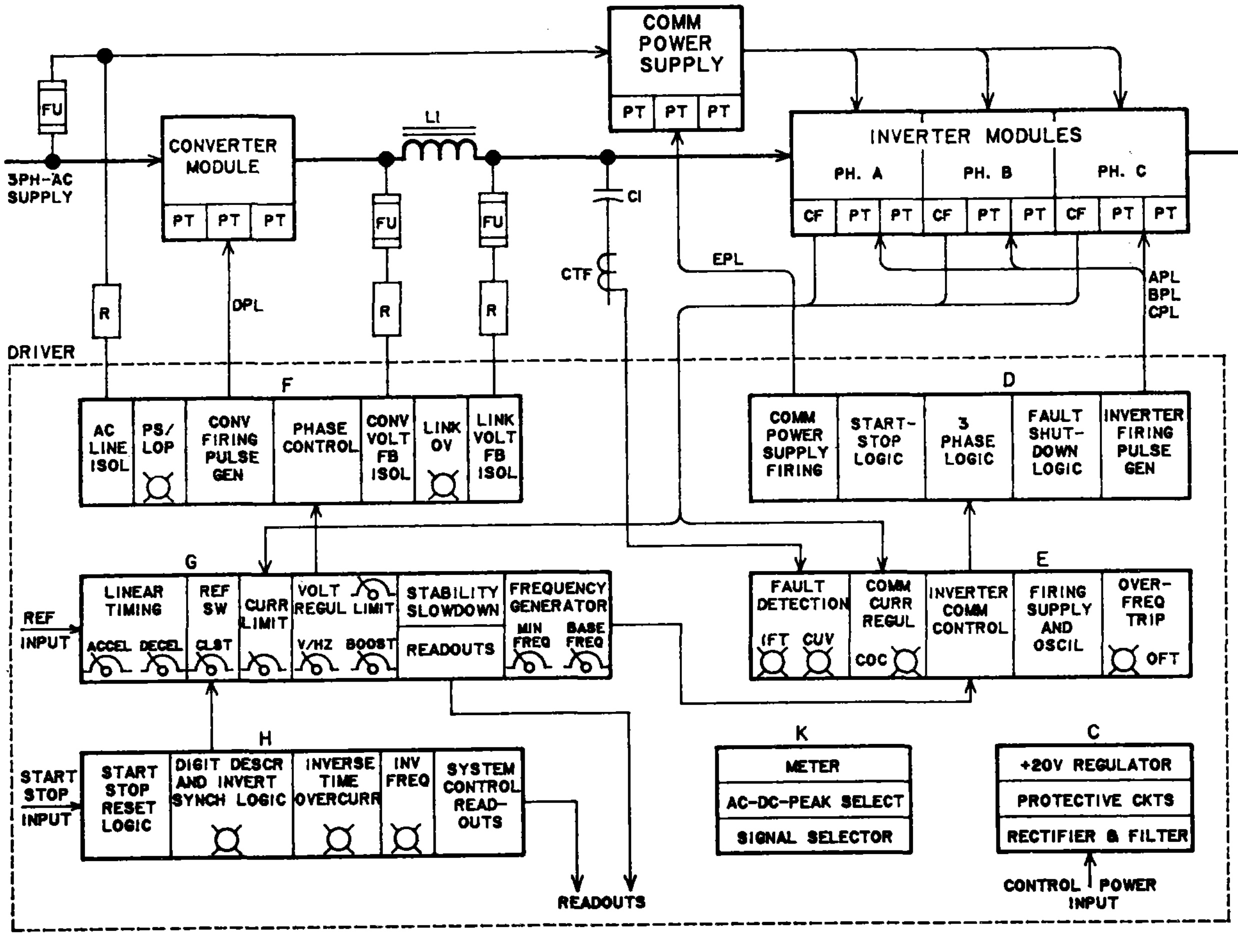

CARD NAMES

CF -CURR FDBK
PT -PULSE TRANSF
C -POWER SUPPLY
D -PHASE LOGIC
E -INVERTER
F -CONVERTER
G -REGULATOR
H -SYSTEM
K -METER(OPTIONAL)

SYMBOLS

FU -CONTROL FUSE
R -FDBK ISOLATION RESISTOR IN WIRE HARNESS
APL TO EPL -DRIVER TO MODULE WIRE HARNESS

FIGURE 5. AF-400 FUNCTIONAL BLOCK DIAGRAM

START–UP and CHECK–OUT

Every AF–400 Inverter drive has been factory tested and is ready to operate, provided that the external power and control connections have been properly made and no shipping and installation damage has been sustained. It is recommended that the following step by step start–up procedure be followed to ensure proper operation of the equipment.

WARNING

IF DOOR INTERLOCKS (IF SUPPLIED) ARE DEACTIVATED OR BYPASSED, EXTREME CAUTION MUST BE USED. BE SURE TO REMEMBER TO RETURN INTERLOCKS TO OPERATING CONDITION AFTER START–UP OR TROUBLESHOOTING.

TEST EQUIPMENT REQUIRED

The following listed equipment should be available during start–up and check–out. The first two items listed are recommended for normal operation and maintenance.

Meter Card – 193X381__G01
Volt–Ohmmeter – Digital preferred, 20K per volt min. input impedance
Clamp–on Ammeter – Adjustable range up to 600 amp.

If the Meter card is not available, an oscilloscope (preferably dual trace) will be required.

TESTING SAFETY PRECAUTIONS

Certain precautions need to be observed in testing this equipment.

All of the control in the driver, with the exception of the 115 volt a.c. supply to the control transformer, is at a low voltage level with respect to ground. The control common is connected to the driver case which is connected to the power unit enclosure, which should be connected to an earth grounding system. Any control circuitry on the power module mounted Current Feedback cards and on the driver side of the pulse Transformer cards, is also at the low voltage level.

All power modules, power components, power wiring, and control wiring and components connected to the power must be assumed to be at a high voltage to ground. The following safety precautions must be strictly observed when testing in the power area:

WARNING

ELECTRIC SHOCK CAN CAUSE PERSONAL INJURY OR LOSS OF LIFE. WHETHER THE A–C SUPPLY IS GROUNDED OR NOT, HIGH VOLTAGES TO GROUND WILL BE PRESENT AT MANY POINTS THROUGHOUT THE DRIVE. CHARGED CAPACITORS REQUIRE AT LEAST ONE MINUTE DISCHARGE TIME.

When testing in the power area, it is recommended from a safety standpoint that the equipment be turned off, the test equipment connections be made, and the power applied for the measurement, and the equipment then be turned off again, prior to disconnecting the test equipment.

WARNING

GREAT CAUTION SHOULD BE OBSERVED WHEN INSTRUMENTS SUCH AS OSCILLOSCOPES ARE USED TO TEST LIVE (ENERGIZED) POWER CIRCUITS. WHEN ONE OF THE INSTRUMENT LEADS IS CONNECTED TO THE CASE OR OTHER METAL PARTS OF THE INSTRUMENT, THIS LEAD SHOULD NOT BE CONNECTED TO ANY UNGROUNDED POINT IN THE SYSTEM UNLESS THE INSTRUMENT IS ISOLATED FROM GROUND AND ITS METAL PARTS TREATED AS LIVE EQUIPMENT. USE OF AN INSTRUMENT HAVING BOTH LEADS ISOLATED FROM THE CASE PERMITS GROUNDING OF THE INSTRUMENT CASE, EVEN WHEN MEASUREMENTS MUST BE MADE BETWEEN TWO LIVE POINTS IN THE CIRCUIT.

When testing in the control area, remember that these are low voltage circuits (20 volts) and can be damaged by improper test procedures.

CAUTION

DO NOT CONNECT POWER AND CONTROL CIRCUITRY TOGETHER IN ANY TEST HOOKUP. THIS DEFEATS THE PURPOSE OF THE CONTROL ISOLATION FUNCTION AND CAN DAMAGE THE EQUIPMENT.

CAUTION

DO NOT REMOVE OR INSERT PRINTED CIRCUIT CARDS IN THE EQUIPMENT WHILE POWER IS APPLIED. THIS CAN DAMAGE THE EQUIPMENT.

POWER–OFF CONTINUITY TEST

WARNING

VERIFY THAT THE MAIN THREE PHASE AC POWER INPUT TO THE SYSTEM EQUIPMENT IS DISCONNECTED OR SWITCHED OFF.

Perform a point to point continuity test for all newly installed wiring and interconnection. Continuity is defined as 1/2 ohm or less.

DRIVER SELECTIONS

There are two card selections and two driver terminal board selections which should be checked before starting up the drive.

NOTE

IF EITHER THE INVERTER CARD (193X376AAG01) OR THE CONVERTER CARD (193X377AAG01) IS REPLACED, THE NEW CARD SHOULD HAVE THE SAME PRESENCE OR ABSENCE OF ITS JUMPER AS THE CARD BEING REPLACED.

460V JUMPER ON INVERTER CARD, 193X376_ _G0_ (or equivalent)

This jumper should be present on all drives whose inverter section operates at 460 volts a.c. maximum output voltage. This jumper should be removed on all drives whose inverter section operates at 230 volts a.c. maximum output voltage.

CAUTION

INCORRECT JUMPER CONNECTION OR DISCONNECTION WILL RESULT IN MALFUNCTION AND POSSIBLE DAMAGE TO THE INVERTER.

60 HZ JUMPER – ON CONVERTER CARD, 193X377_ _G0_ (or equivalent)

This jumper should be present on all drives supplied from 60 Hz a.c. power, and should be removed on all drives supplied from 50 Hz a.c. power.

BASE FREQUENCY RANGE (BFR) JUMPER – Driver TB35 to TB34

This jumper selects the inverter base frequency range as follows:

Base Freq. Range of 37.5 to 75 Hz – Jumper TB35 to TB34

Base Freq. Range of 75 to 150 Hz – no Jumper on TB35

Base Frequency is the frequency at which the inverter reaches full voltage and is adjusted by the BF potentiometer (on the Regulator card) within either of the above two ranges. Although the standardized driver label shows this jumper present, consult your specific drive elementary diagram for proper jumper selection.

CAUTION

IMPROPER JUMPER CONNECTION OR DISCONNECTION MAY RESULT IN DRIVE MALFUNCTION AND DAMAGE.

OVERFREQUENCY TRIP JUMPER –

This jumper selects the upper inverter frequency at which the drive will trip and shut down to prevent motor overspeed. The frequency trip levels are selected as follows:

75 Hz frequency trip – No jumper required
110 Hz frequency trip – Jumper TB30 to TB31
165 Hz frequency trip – Jumper TB30 to TB32
275 Hz frequency trip – Jumper TB30 to TB33

Consult your specific drive elementary diagram for proper jumper placement

WARNING

IMPROPER JUMPER PLACEMENT MAY PRESENT AN EQUIPMENT OR PERSONNEL HAZARD DUE TO MOTOR OVERSPEED.

INVERTER PHASE MODULE SELECTION

A jumper selection on the Current Feedback card (193X382__), which is mounted on the front of each inverter phase module, provides the means to calibrate the inverter current feedback signal to the drive current rating. The card group number and jumper selection must be the same on all three inverter phase modules. The jumper selection should be made using the table on the phase module elementary diagram or Table 2 of the Current Feedback card printed circuit

INVERTER PHASE MODULE (CONTINUED)

diagram. Use the nominal inverter rms amps given in the table that is closest to the drive nameplate output current rating to check for the correct Current Feedback card group number and jumper selection. Incorrect jumper selection will effect the current limit and overcurrent shutdown levels.

START–UP PROCEDURE

Perform the following step by step procedure in the sequence given below. If during this procedure a problem is encountered, refer to the Troubleshooting Section of this manual.

1. Before applying a.c. supply power to the drive, verify that it is the proper voltage, phase and frequency as denoted on the equipment data nameplate.

2. Disconnect the three phase output cables from the drive terminals T1, T2 and T3, or inactivate the output contactor if one is provided.

3. Disconnect control wire harness APL, BPL, CPL and DPL from their plug receptacles at the bottom of the driver. Do <u>not</u> disconnect the EPL plug.

4. Using a volt–ohmmeter selected to the X1 ohms scale, check that no short exists between d.c. link busses P1 and P2. Also check the three a.c. supply power fuses, all fuses on the commutation power supply module, and all control power fuses to confirm that they are not blown.

5. Apply a.c. power to the drive and check that the "Power On" light indicates.

6. Check the driver card indicating lights. Only the IF inverter frequency light should be indicating and it should be blinking at a low frequency. If the PS/LOP phase sequence/loss of phase light is indicating, check that driver wire harness EPL containing the a.c. supply input is plugged into the driver, and that the correct voltage is present on all three a.c. supply power terminals L1, L2 and L3. If these are correct, the phase sequence is wrong. Disconnect the a.c. power, interchange any two cables, and repeat steps 5 and 6.

7. Check that blower or fan rotation is correct and that they are operating properly and producing air flow through the power modules. Refer to the sketches below and to labels on the air distribution chamber for correct operation.

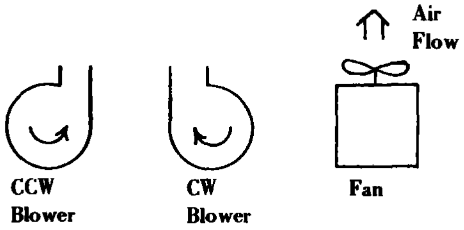

If blower or fan rotation is incorrect, interchange any two a.c. supply leads to the blower motor. If no rotation occurs, check blower or fan fuses on the commutation power supply module.

8. Set the driver reference input at zero. Check for zero reference voltage by selecting Meter card switch position 2, or measure the voltage between driver terminal board points TB16 to TB8.

9. Interrupt a.c. power to the drive, connect the DPL wire harness plug to the driver (which controls the converter module), and reapply a.c. power.

10. Check the driver lights again. Only the IF light should be on, blinking at a low frequency. Run through the Meter card selector switch positions 1 through 18 and compare these readings with the readings shown on the driver label mounted on the inside of the power unit enclosure door. This label also is sheet 4 of the driver connection diagram. The readings taken should compare with those given for the "Off Condition" (except for positions 7, 8 and 9 which are meaningless since wire harness APL, BPL and CPL are not connected).

    If a Meter card is not available, use a volt–ohmmeter to check REF (TB16 to TB8), FVRO (TB22 to TB8), and the converter output voltage between P1 and P2. The P1 to P2 voltage should not exceed 30 volts d.c. for 230 volt a.c. drives or 60 volts d.c. for 460 volt a.c. drives, before the inverter is started.

11. Press the drive "Start" pushbutton. Check driver lights and Meter card position 4, or P1 to P2 voltage. They should be the same as for step 10.

12. Increase reference input to the driver slowly until the P11 to P2 voltage reaches half of rated d.c. link voltage (150 volts d.c. for 230 volt a.c. drives and 300 volts d.c. for 460 volt a.c. drives). The Meter card positions 2 and 4 should both read 7.5 (7.5 volts between TB16 and TB8).

CAUTION

WHEN THE DRIVE HAS NOT BEEN OPERATED FOR 6 MONTHS OR MORE, THE ELECTROLYTIC CAPACITORS IN THE FILTER CAPACITOR ASSEMBLY(S) MUST BE RE–FORMED. FOLLOW THE PROCEDURE IN STEP 13 IF FORMING IS REQUIRED, OR SKIP STEP 13 IF NOT REQUIRED.

13. If capacitor forming is required, increase the P11 to P2 d.c. link voltage in the following steps, pausing for 5 minutes at each step in the forming process.

OPERATING VOLTAGE LEVEL		OPERATING
230VAC DRIVE	460VAC DRIVE	TIME
200 VOLTS D.C.	400 VOLTS D.C.	5 Min.
250 VOLTS D.C.	500 VOLTS D.C.	5 Min.
300 VOLTS D.C.	600 VOLTS D.C.	5 Min.

(OR AT MAXIMUM REFERENCE)

During each step of the forming process, check the voltage at the Q or midpoint of the seriesed capacitor asm. (s) (460 volt a.c. drives only). The difference between the P11 to Q and Q to P2 voltage readings should not exceed 5% of the P11 to P2 voltage. For example, at a P11 to P2 voltage of 600 volts, the difference between the P11 to Q and Q to P2 voltages should not exceed 30 volts. If the Q midpoint varies more than 5%, refer to the Troubleshooting Section of this manual. In no case should more than 400 volts d.c. be applied across a single capacitor.

14. Press the drive "Stop" pushbutton and decrease the driver reference to zero. The d.c. link voltage between P1 and P2 (Meter position 4) should discharge down to less than 10% of maximum in about 30 seconds.

15. Interrupt a.c. supply power to the drive, connect the APL, BPL and CPL wire harness plugs to the driver (which controls the invertet phase modules), and reapply a.c. power.

16. With reference input to the driver at zero, press the driver "Start" pushbutton and check the driver card lights. Run through the Meter card positions 1 through 18 and compare these readings with those given on the driver label for "0 Ref. 0 Load".

If a Meter card is not available, use an oscilloscope to check the inverter commutation current feedback signals, using the driver SEL1 and SEL2 back plane diagnostic probes which are color coded black and violet respectively. Connect these probes to driver receptacle K, terminals 32, 31 and 30. Connect the oscilloscope leads to driver terminal board points TB39 (SEL1) or TB40 (SEL2) and TB34 (COM). The peak voltage level of the higher commutation pulse in each phase should agree with the values given on the driver label, and the waveshapes should appear as shown in Fig. 6. The positive commutation current pulse is normally the higher since the negative pulse is attenuated on the Current Feedback card.

17. Slowly increase the driver reference input up to maximum while checking the inverter commutation current peak level of each phase, by means of selector positons 16, 17 and 18 on the Meter card, or by means of SEL1 and SEL2 and an oscilloscope as described in step 16. The commutation current peaks should increase somewhat, as shown on the driver label, but should remain in the ranges shown.

Also check that the base frequency is correct for your motor drive system and readjust if necessary. See Base Frequency in the Adjustments section for checking and adjustment instructions.

18. Press the drive "Stop" pushbutton and reduce the driver reference to zero. The inverter should decelerate down to about one–fourth of rated frequency and voltage, and then stop.

19. Interrupt the a.c. power to the drive. Reconnect the three phase output cables to drive terminals T1, T2 and T3, or reactivate the output contactor, to connect the motor(s) to the inverter.

20. Reapply a.c. power to the drive. With reference input to the driver at zero, press the drive "Start" pushbutton and slowly bring the ref–

20. (Continued)

erence up to half rated. Run through the Meter card positions 2 through 18 and compare these readings with those given on the driver label for "1/2 Ref., 1/2 Load". If the motor loading is different than one–half of rated, the position 7, 8 and 9 readings will be different from those given, but they should all be the same value.

If any Meter reading discrepancies exceeding 5% full scale (1.0) from those values given in the drive table are found, proceed to the Adjustments Section.
If a Meter card is not available, use a clamp–on ammeter to read the inverter a.c. output current in each phase to check that they are balanced. Also check the a.c. supply input currents to the converter to check that they are balanced.

21. Slowly increase the driver reference up to the maximum of 15 volts. Run through the Meter card position 2 through 18 and compare these readings with those given on the driver label for "1 Ref., 1 Load". Again position 7, 8 and 9 readings will depend on the actual motor load

ADJUSTMENTS

Although the drive has been adjusted in factory test, it is recommended that these adjustments be checked to determine if they are correct for your application and power system. The following sequence should be followed in checking and modifying the nine driver adjustments, all of which are located on the Regulator card. (The Voltage Limit VLIM potentiometer is located at the card top edge rather than the front edge, and is adjusted through the top opening in the driver rack). Before starting, record the factory adjustment positions of each potentiometer. The driver label may be used for this purpose, and for any changes in adjustment that may be made.

NOTE

IF THE DRIVER REGULATOR CARD IS REPLACED, SET ALL NINE POTENTIOMETER ARROWS ON THE NEW CARD THE SAME AS ON THE CARD BEING REPLACED. THE FOLLOWING ADJUSTMENT PROCEDURE SHOULD THEN BE FOLLOWED TO CHECK THE ADJUSTMENT OF THE NEW CARD.

VB – VOLTAGE BOOST

This adjustment is dependent on the amount of motor torque required at speeds below about one–fourth of rated, or the amount of breakaway torque required. If motor torque requirements below one–fourth rated speed are less than 25% of rated torque, no voltage boost is required and VB should be set fully counter–clockwise. For higher motor loading at low speeds, a certain amount of voltage boost is required to prevent the motor from "pulling out" and stalling. The amount of adjustment of the VB potentiometer from the CCW end depends on the amount of motor load torque at low speeds and type of motor (larger motors require less voltage boost than smaller motors). Adjust VB only enough so that the motor(s) accel–erates smoothly from rest. Too much voltage boost will produce excessive motor peak currents which will cause torque pulsations or "cogging". If motor "cogging" or a grinding noise occurs at low motor speeds, the voltage boost should be reduced (VB turned toward CCW end).

V/HZ – VOLTS/HERTZ

Operate the drive at a reference of 12 volts at driver TB16 to TB8 (reading of 12 on Meter card position 2). Adjust the V/Hz potentiometer to obtain a d.c. link voltage between P11 and P2 of 250 volts d.c. for 230 volt a.c. drives and 500 volts d.c. for 460 volt a.c. drives. This corresponds to 12.5 reading on Meter card position 4.

The above volts/hertz setting should include the effects of the VB voltage boost setting. If the VB setting is changed, the volts/hertz should be readjusted to maintain proper motor excitation.

VLIM – VOLTAGE LIMIT (located at top edge card)

This is normally a factory adjustment and should not have to be readjusted. To check this adjustment, operate the drive at rated base speed (normally at a driver reference of 15 volts). Using the volt–ohmmeter, or any reliable rectifier type a.c. volt–meter (but not an iron vane type), read the inverter output voltage between terminals T1 and T2 and compare it with the a.c. supply voltage read with the same meter. The inverter output voltage should be 10 volts less than the supply voltage for nominal 230 volt a.c. drives and 20 volts less than the supply voltage for nominal 460 volt a.c. drives. If the voltage difference is less, turn the VLIM potentiometer count–er–clockwise until the 10 or 20 volt difference is obtained. If the voltage difference is greater, and the a.c. supply voltage is less than 240 or 480 volts a.c., turn the VLIM potentiometer clockwise until the 10 or 20 volt difference is obtained.

If the a.c. supply voltage is above 240 or 480 volts a.c. the drive will not be in voltage limit (with rated reference and proper volts/hertz adjustment) so the voltage difference between a.c. supply and inverter output voltage will be greater than the 10 or 20 volts. The voltage limit function, therefore, only can be checked if a higher than rated reference is applied to the driver, when the a.c. supply voltage exceeds 5% above the rated voltage.

BF – BASE FREQUENCY

With the driver reference at the rated 15 volts (TB16 to TB8) – Meter card position 2), adjust the BF potentiometer to obtain the desired motor base fre–quency. This frequency can be read by means of a frequency counter connected between driver TB37 (IPAD) and TB34 (COM). It can also be read to within ±2% accuracy by connecting a digital volt–meter between TB22 (FVRO) and TB8 (COM). The frequency is obtained by multiplying the voltage reading by 5 when TB35 is connected to TB34, and multiplying

BF – BASE FREQUENCY (continued)

by 10 when TB35 is left open. A third method of reading frequency, to within ±5% accuracy, is by taking the Meter card position 3 reading and applying the 5 or 10 times multiplier just described.

MINF – MINIMUM FREQUENCY

Normally the MINF potentiometer is set at or near the counter–clockwise end for best starting of motors, especially if any breakaway torque is required. If a transformer is used between the power unit and the motor, the minimum frequency will have to be set higher to prevent transformer saturation. A higher minimum frequency can be obtained by turning MINF in a clockwise direction.

ATIM & DTIM – ACCELERATION AND DECELERATION TIME

With the driver reference at the rated 15 volts, start the drive from rest and check the acceleration time and the Meter card position 10 reading. If the meter reading goes below 10 during acceleration, the drive is going into current limit, and it is probably desirable to increase the acceleration time by adjusting the ATIM potentiometer in the clockwise direction. If a Meter card is not available, the motor current can be read with a clamp–on ammeter to measure the acceleration load.

With the drive operating at rated speed, quickly adjust the driver reference to zero and check the deceleration time and the Meter card position 6 reading. If the meter reading goes above 10 before deceleration is completed, the drive is going into slowdown limit, and it is probably desirable to increase the deceleration time by adjusting the DTIM potentiometer in the clockwise direction.

If shorter acceleration or deceleration times are desired, the ATIM or DTIM potentiometers should be adjusted in the counter–clockwise direction, and the operation checked as described above. The minimum times obtainable, within the 2.5 to 25 second adjustment range, are limited by the current limit and slowdown limit control.

CLIM – CURRENT LIMIT

The percentage of rated drive output current at which current limit will occur can be approximated by the setting position of the CLIM potentiometer, per the following table:

CLIM Setting	CCW end	1/4 from CCW end	mid–point	1/4 from CW end	CW end
% Rated Current	50 to 60%	75 to 90%	105 to 120%	130 to 145%	155 to 175%

CLST – CURRENT LIMIT STABILITY

This stability adjustment for current limit operation is dependent on the motor and load inertia, motor HP rating, and on the current limit setting. The correct setting of the CLST potentiometer can be determined by using the following table:

Load Inertia	CLST Setting for Motor HP	
	10 to 100HP	100 to 400HP
Negligible load inertia	CW end to 1/3 from CW end	1/3 from CW end to midpoint
Load inertia equals motor inertia	Midpoint to 1/3 from CCW end	1/3 from CCW end to 1/4 from CCW end
Load inertia equals 2 x motor inertia	1/4 from CCW end to 1/6 from CCW end	1/6 from CCW end to 1/8 from CCW end
Load inertia equals 5 x motor inertia or greater	1/8 from CCW end to CCW end	CCW end

The setting ranges given in the table cover the current limit (CLIM) setting range, such that the CLST setting varies toward the clockwise end of its setting range as the CLIM setting is adjusted towards its clockwise end, and vice–versa.

If instability occurs during current limit operation, the CLST potentiometer should be adjusted toward its counter–clockwise end.

TROUBLESHOOTING

A systematic approach to troubleshooting will reduce the time required to find the problem. This approach consists of trying to localize the problem or cause, in the following step by step fashion.

1. Is the problem inside the AF-400 power unit or caused by external conditions or equipment?
2. Which module in the power unit is causing the problem?
3. Which component within the module is at fault or has failed?

The means to accomplish this are the recommended test equipment to use, and the troubleshooting procedures outlined in this section. The efficiency with which they are used will be dependent on the skill and experience of the test personnel, and how well they understand the drive operation, as explained in the Description Section of this manual.

TEST EQUIPMENT REQUIRED

The following test equipment should be available for troubleshooting, and is listed in the order of recommended preference. The first two items are recommended for normal operation and maintenance.

Meter Card	193X381 G01
Volt Ohmmeter	Digital preferred – 20K per volt min. input impedance.
Oscilloscope	Dual trace preferred
Clamp-on Ammeter	Adjustable range up to 600 amps

TESTING SAFETY PRECAUTIONS

Certain precautions need to be observed in testing this equipment.

All of the control in the Driver, with the exception of the 115 volt a.c. supply to the control transformer, is at a low voltage level with respect to ground. The control common is connected to the driver case which is connected to the power unit enclosure, which should be connected to an earth grounding system. Any control circuitry on power module mounted Current Feedback cards and on the Driver side of the pulse transformers on Pulse Transformer cards, is also at the low voltage level.

All power modules, power components, power wiring, and control wiring and components connected to the power must be assumed to be at a high voltage to ground. The following safety precautions must be strictly observed when testing in the power area:

WARNING

ELECTRIC SHOCK CAN CAUSE PERSONAL INJURY OR LOSS OF LIFE. WHETHER THE A.C. SUPPLY IS GROUNDED OR NOT, HIGH VOLTAGES TO GROUND WILL BE PRESENT AT MANY POINTS THROUGHOUT THE DRIVE. CHARGED CAPACITORS REQUIRE AT LEAST ONE MINUTE DISCHARGE TIME.

When testing in the power area, it is recommended from a safety standpoint that the equipment be turned off, the test equipment connections be made, and the power applied for the measurement, and the equipment then be turned off again, prior to disconnecting the test equipment.

WARNING

GREAT CAUTION SHOULD BE OBSERVED WHEN INSTRUMENTS SUCH AS OSCILLOSCOPES ARE USED TO TEST LIVE (ENERGIZED) POWER CIRCUITS. WHEN ONE OF THE INSTRUMENT LEADS IS CONNECTED TO THE CASE OR OTHER METAL PARTS OF THE INSTRUMENT, THIS LEAD SHOULD NOT BE CONNECTED TO AN UNGROUNDED POINT IN THE SYSTEM UNLESS THE INSTRUMENT IS ISOLATED FROM GROUND AND ITS METAL PARTS TREATED AS LIVE EQUIPMENT. USE OF AN INSTRUMENT HAVING BOTH LEADS ISOLATED FROM THE CASE PERMITS GROUNDING OF THE INSTRUMENT CASE, EVEN WHEN MEASUREMENTS MUST BE MADE BETWEEN TWO LIVE POINTS IN THE CIRCUIT.

When testing in the control area, remember that these are low voltage circuits (20 volts) and can be damaged by improer test procedures.

CAUTION

DO NOT CONNECT POWER AND CONTROL CIRCUITRY TOGETHER IN ANY TEST HOOKUP. THIS DEFEATS THE PURPOSE OF THE CONTROL ISOLATION FUNCTION AND CAN DAMAGE THE EQUIPMENT.

CAUTION

DO NOT REMOVE OR INSERT PRINTED CIRCUIT CARDS IN THE EQUIPMENT WHILE POWER IS APPLIED. THIS CAN DAMAGE THE EQUIPMENT.

FAULT INDICATION

The two basic indications of a drive problem are:

A. Drive Operates Improperly

1. Driver is at fault – refer to Driver Troubleshooting in this section.
2. System Control is at fault – refer to the system elementary diagrams for system logic and control circuits and operating notes.

B. Drive Shuts Down, or Will Not Start

1. Driver card fault lights are indicating – refer to Fault Indicating Lights in this section.
2. Driver is at fault – refer to Driver Troubleshooting in this section.
3. System control is at fault – refer to the system elementary diagram for system logic and control circuits and operating notes.
4. A.C. supply fuses or circuit breakers have interrupted, or control power fuses have blown – Disconnect a.c. power from drive and check a.c. supply fuses. If fuses blown, or if a.c. breaker tripped, check the converter and inverter modules for faulty SCRs. Refer to Converter Troubleshooting and Inverter Module Troubleshooting in this section. Also check control fuses by referring to Commutation Power Supply Troubleshooting in this section. If these check out all right, check for defective filter capacitors (See DC Link Filter Trouble shooting in this Section) or for power cable or bus bar shorts in the a.c. supply, d.c. link and a.c. output. Also check for grounds in power cables and in motor windings.

FAULT INDICATING LIGHTS (on driver cards)

The IF inverter frequency light and the SYNC inverter synchronized light are not fault lights but indicate operating conditions. The IF light should be indicating at all times that the driver is energized, even after a fault. Its blinking frequency indicates the driver operating frequency.

IFT only– If this is the only fault light that is indicating, an inverter fault has occurred. Refer to Inverter Module Troubleshooting in this section.

IOF only – this indicates an inverter overfrequency shutdown. Refer to Driver Troubleshooting in this section.

COC and IFT – This indicates a commutation overcurrent trip which produces an inverter fault shutdown. Check for drive overloading at or near full speed operation. Also refer to Driver Troubleshooting and Commutation Power Supply Troubleshooting in this section.

COC, IFT and ITOC – This indicates a combination commutation overcurrent, motor overcurrent shutdown. Check for drive overloading at or near full speed operation. Also refer to Driver Troubleshooting and commutation Power Supply Troubleshooting in this section.

CUV only – This indicates a control undervoltage condition. Refer to Driver Troubleshooting in this section.

CUV and IFT – This indicates a control undervoltage trip which produces an inverter fault shutdown. Refer to Driver Troubleshooting in this section.

CUV, IFT and PS/LOP – This indicates a combination control and power undervoltage shutdown. Check the a.c. supply for outage problems.

LOV and IFT – This indicates a d.c. link overvoltage trip which produces an inverter fault shutdown. Refer to Driver Troubleshooting in this section.

LOV, IFT, COC and/or ITOC – This indicates a combination shutdown which would normally occur due to the effects of the d.c. link overvoltage. Refer to Driver Troubleshooting in this section.

FAULT INDICATING LIGHTS (on driver cards) (cont)

PS/LOP only – this indicates the presence of, or a shutdown caused by, wrong a.c. supply phase sequence or a loss of one or more a.c. supply phases. Disconnect the a.c. power and check the a.c. supply fuses or circuit breaker, especially if the driver is supplied from another power source. Also check the FUL1, FUL2 and FUL3 control fuses on the commutating power supply. Refer to Commutating Power Supply Troubleshooting if any of these fuses are blown. Check that the drive is connected to the a.c. supply in the correct phase sequence.

ITOC only – This indicates an inverter output overcurrent shutdown, either due to an instantaneous trip for current levels over 175% of rated drive current, or an inverse time trip of from 15 seconds to 1 minute for lower overcurrent levels, depending on the current limit setting. Check for motor overloading, excessive volts/hz adjustment, locked rotor, or for motor single phasing. Also check for motor being switched on to the inverter at other than synchronized operation or minimum voltage and frequency. Finally check for motor cable shorts or grounds. Also refer to Driver Troubleshooting in this section.

ITOC and IFT – This indicates an inverter output overcurrent which is excessive enough to also cause an inverter fault. Check for motor jam–ups, excessive volts/hz adjustment, locked rotor, or for motor single phasing. Also check for motor being switched on to the inverter at other than synchronized operation or minimum voltage and frequency. Finally check for shorts or grounds in output cables and motor windings.

DRIVER TROUBLESHOOTING

The driver consists of six or more cards, each of which contains quite a few circuits. To help in understanding and troubleshooting the driver, the functions contained on each card are shown in the Functional Block Diagram of Figure 5. These functions are described in the Description Section of this manual.

The optional Meter Card is a great help in troubleshooting the driver. If a Meter card is available, an oscilloscope is not required except in only the most difficult cases. Normally the use of the Meter card will allow pinpointing of the problem to a specific card, which can then be replaced, or to a certain power module.

The driver label, mounted on the inside of the enclosure door, gives the normal readings for the Meter card selector switch positions for five operating conditions. This label also is sheet 4 of the driver connection diagram. These normal readings are given for the 18 selected signals, plus the inverter and converter firing signals selected by the position 19 back plane selector probe.

The Meter card can be used in several ways. It is useful in checking through the 18 key driver signals when operating at the conditions specified, to determine if any readings are abnormal. When position 19 is selected, the red wire back plane selector probe can be used to check card (receptacle) terminal signals. The troubleshooting notes will specify correct and incorrect readings for special test conditions to determine if various faults exist.

If a Meter card is not available, these same readings can be made using a digital volt–ohmmeter or an oscilloscope. One input to the instrument is connected to either driver TB39 (SEL1) or TB40 (SEL2) and the other input is connected to TB34 (COM). The two back plane selector probes (SEL1 is the black wire probe and SEL2 is the violet wire probe) can then be connected to the appropriate driver receptacle terminal as denoted in the troubleshooting notes.

When using the back plane selector probes, there are a few sensitive card terminals which should be avoided when the drive is operating with a motor, since connection of an instrument will cause changes in the drive output. These sensitive termianls are –

Receptacle F Converter Card	Receptacle G Regulator Card	Receptacle H System Card
term. 16–LVP	term. 7–SSDI	term. 28–RFC
term. 17–LVN	term. 11–BFI	
term. 19–CVN	term. 12–BFD	
term. 20–CVP	term. 23–SSDO	
term. 22–L2S	term. 32–RFC	
term. 23–L1S		
term. 24–L3S		

Care should also be used in connecting an instrument to the driver reference REF (TB16, receptacle G, term. 30, receptacle K, term. 18) since this may produce a small motor speed change.

DRIVER TROUBLESHOOTING (continued)

Three other diagnostic terminal board points are provided for oscilloscope usage. These are –

TB36 (LPAD) –A square wave logic signal which is in phase with the a.c. supply line phase A (or phase 1) to neutral voltage.

TB37 (IPAD) –A square wave logic signal which is in phase with the inverter output phase A to neutral voltage.

TB38 (OCPD) –A normally high logic signal having a short low going pulse at the start of every inverter commutation (six times the inverter frequency).

These signals are especially useful for oscilloscope triggering when reading other signals.

CAUTION

IF DURING TROUBLESHOOTING, ONE OF THE FOLLOWING CARDS IS REPLACED, THE NEW CARD SHOULD HAVE THE SAME POTENTIOMETER SETTINGS, OR JUMPER PRESENCE OR ABSENCE, AS THE OLD CARD.

REGULATOR CARD –NINE POTENTIOMETERS (INCL. VLIM)
CONVERTER CARD –60 HZ JUMPER
INVERTER CARD –460V JUMPER

A. Drive Operates Improperly

1. Cannot obtain maximum rated frequency and speed

   a) Check the driver reference REF volts (Meter card pos. 2 or driver TB16 to TB8 voltage). If less than 15 volts check the reference potentiometer (should be 5000 ohms) and the RMAX volts TB17 to TB8, or check the system control (see system elementary diagrams).

   b) Check the converter voltage reference CVR (Meter card pos. 6 or driver receptacle K, term. 14 voltage to common). This voltage should decrease at an even rate to approximately 3.5 volts as the driver reference is increased to 15 volts. If this is the case, continue on to part c). However, if the CVR voltage suddenly decreases to about 1.5 volts, it indicates the converter is saturating. Check the d.c. link voltage. It should read approximately 15 at Meter card pos. 4 or should read either approximately 300 volts d.c. or 600 volts d.c. between power circuit terminals P11 and P2, for a 230 volt a.c. or 460 volt a.c. drive respectively. If this voltage is significantly less, check the a.c. supply voltage level and check the converter. See Converter Troubleshooting in this section. If the d.c. link voltage is approximately 1.35 times the a.c. supply voltage, the voltage limit VLIM potentiometer on the Regulator card is not adjusted properly. Refer to Adjustments section.

   c) Check the inverter frequency voltage FVRO (Meter card pos. 3 or driver TB22 to TB8 voltage). The drive output frequency should be 5 times this voltage reading when driver TB35 is connected to TB34 or 10 times when TB35 is left open. If the FVRO reading agrees with the output frequency, if the presence or absence of the base frequency range BFR jumper at TB35 is correct, and if BFD TB43 is jumpered to TB44 or properly connected to an external base frequency potentiometer which is set correctly, then the BF potentiometer on the Regulator card should be adjusted. (Refer to Adjustments section.) If the output frequency does not agree with the FVRO reading, or if the BF adjustment appears faulty, replace the Regulator card and check the operation.

2. Motor will not accelerate from stall or low speed.

   a) Check the driver REF volts (Meter card pos. 2 or driver TB16 to TB8 voltage). If it is less than 2 volts, check the reference potentiometer or system control (see system elementary diagrams).

DRIVER TROUBLESHOOTING (continued)

2. (continued)

   b) Check if the inverter is operating. Meter card pos. 11 (1R1), or driver receptacle K, term. 9 voltage to common, should be near 20 . If zero, refer to Drive Shuts Down, or Will Not Start.

   c) Check the ODMF input at driver TB10. It should be high (near 20 volts to common). If it is near zero volts to common, check the system control connected to this input.

   d) Check if the drive is in current limit. (The drive should shut down with an ITOC fault light after about 45 seconds.) Meter card, pos. 10 (OCL), or driver receptacle K, term. 10 voltage to common, should be near 20. If less than 10, check the settings of the current limit CLIM and voltage boost VB potentiometers on the Regulator card. Refer to Adjustments section.

   e) If the problem cannot be found, replace the Regulator card and check operation.

3. Motor operation is rough or unstable.

   a) Check voltage boost VB potentiometer adjustment. Excessive voltage boost at low speed and light load operation will cause motor "cogging" or a grinding noise. Refer to Adjustments section.

   b) If violently unstable motor operation occurs below one–half rated speed, check that the stability–slowdown circuit is connected. On driver receptacle G, terminal 23 should be connected to terminal 7.

   c) If unstable operation occurs when in current limit, the current limit stability CLST potentiometer is not adjusted properly. Refer to Adjustments section.

   d) Check for low a.c. supply voltage to the driver TB1 to TB2. This should not be less than 105 volts a.c.

   e) Check for uneven motor loading or motor single phasing.

   f) If the problem cannot be found, replace the Regulator card and check operation.

4. Cannot control motor speed.

   a) Check the driver reference REF (meter card pos. 2 or driver TB16 to TB8 voltage) to see if the problem is in the driver or in the system control. If the problem appears to be in the system control, refer to the system elementary diagrams

   b) Check the OSYNC input at driver TB11. It should be high (near 20 volts to common). If it is near zero volts to common, check the system control connected to this input.

   c) Check the FUP1, FUP11 and FUP2 control fuses on the commutating power supply. Refer to Commutation Power Supply Troubleshooting in this section.

   d) If the problem cannot be found, replace the Regulator card and check operation.

5. Cannot stop motor.

   NOTE: If motor cannot be stopped by the normal means, interrupt a.c. power to the drive.

   a) Check the OSTOP input at driver TB12. It should be low (near zero volts to common) to stop the drive. If it is higher than 3 volts to common, check the system control connected to this input (see system elementary diagrams).

   b) Check the FUP1, FUP11 and FUP2 control fuses on the commutation power supply. Refer to Commutation Power Supply Troubleshooting in this section.

DRIVER TROUBLESHOOTING (continued)

c) Check for low d.c. link voltage. If the Meter card pos. 4 reads less than 3, or if the d.c. voltage between power circuit terminals P11 and P2 is less than 70 volts (230 volt a.c. drive) or 140 volts (460 volt a.c. drive), and the OSTOP driver input is low, then the System card is probably defective and should be replaced.

d) Check for high d.c. link voltage. If the Meter card pos. 4 reads higher than 4, or if the d.c. voltage between power circuit terminals P11 and P2 is greater than 75 volts (230 volt a.c. drive) or 150 volts (460 volt a.c. drive), and the OSTOP driver input is low, the converter is not turning off. Check the converter reference voltage CVR (Meter card pos. 6 or driver receptacle K, term. 14). If this voltage to common is about 10 volts, the problem is either in the Converter card or in the converter power module. Refer to Converter Troubleshooting in this section. If the CVR voltage to common is less than 8, then the problem is either in the Regulator card or the System card. Try replacing each card separately and checking the operation.

6. Cannot obtain rated motor horsepower.

a) Check the motor nameplate for the rated voltage and frequency for rated horsepower. Check the inverter output voltage and frequency at rated reference. See the driver label for Meter card pos. 2, 3, 4, 7, 8 and 9 readings for the 1REF, 1 LOAD condition. If these readings and/or the inverter output voltage is too low, refer to Adjustments section for proper base frequency, volts per Hz, and voltage limit settings. Rated power output cannot be obtained at a driver reference voltage, that is much less than 15 volts since this voltage is closely related to the d.c. link voltage and thus the inverter a.c. output voltage.

b) Check the a.c. power supply voltage. It should not be less than 5% below rated nameplate a.c. input voltage to the drive.

7. Cannot synchronize inverter with a.c. line or other external frequency.

a) Check that OSYNC input at driver TB11 is low (near common). If it is not, check the system control (refer to the system elementary diagrams).

b) If OSYNC is low, check OIS at Meter card, pos. 12 or receptacle K, term 8. If OIS is high (near +20 volts), use an oscilloscope connected to SEL1 and SEL2 to determine if the proper frequency signals appear at receptacle H terminals 9 and 10. The inverter frequency should be applied to terminal 9 and the a.c. line, or external frequency, should be applied to terminal 10. Also check that the RFC clamp is being applied to override the reference by checking that the driver reference will not affect motor speed.

c) If the OIS signal is low, check the SYNC light and the OSRO readout at driver TB18. If the light does not indicate and OSRO remains high, try replacing the System card and the Regulator card separately and check operation after each replacement to determine if either card is defective.

B. Drive Shuts Down, or Will Not Start

1. IOF fault light on.

a) Check the frequency trip selection at driver TB30 through TB33. Refer to the driver label, or Start-up and Checkout section of this manual, for proper jumper placement.

b) Check for an overhauling load pumping back into the inverter d.c. link to increase the voltage and frequency.

c) If the problem keeps occuring, replace the Inverter card and check operation.

DRIVER TROUBLESHOOTING (continued)

2. COC and IFT (and ITOC) fault lights on.

   a) Check the peak voltages of the three commutation current feedback signals over the whole operating range of the drive. These can be read on Meter card positions 16, 17 and 18, or with an oscilloscope by probing receptacle K, terminals 32, 31 and 30, for phases A, B and C respectively. Refer to the driver label for the normal peak voltage readings. See Figure 6 for wave shape of a normal commutation current pulse. A COC trip should not occur until one of these peaks reaches about 18 volts.

   b) If one of the commutation current peaks is significantly higher than the others, shut down the drive and check the Current Feedback card on the inverter phase module of the phase in question. Check the resistance between the K1 to K2 terminals of the Current Feedback card, and compare with the resistance value (for the correct card group no.) given in Table 3 of the Current Feedback card printed circuit diagram. Replace this card if it appears to be defective and check drive operation.

   c) If all current feedback signals are the same, but go too high near rated output, check for motor overloading or for high a.c. supply voltage.

   d) If excessive commutation currents persist, replace the Inverter card and check operation.

3. CUV (and IFT) fault lights on.

   a) Check the +10 volt (Meter card, pos. 1) and +20 volt (TB7 to TB8 voltage) control power. A CUV trip will occur at about 18 volts. If the +20 volt measures low, check the 115 volt a.c. supply to the driver TB1 and TB2. It should be no lower than 105 volts a.c. If the a.c. supply is all right, check for excessive loading of the Power supply card, especially from external loads connected to driver TB7. If the low +20 volt problem cannot be found, replace the Power Supply card and check operation.

   b) If the +20 volt is all right, check the DFS voltage (Meter card, pos. 13, or receptacle K, term. 7 voltage to common). If it is below 16 volts interrupt a.c. power to the drive and disconnect driver wire harnesses APL, BPL, CPL and DPL. Check if DFS is being pulled down by either the Converter card or the Phase Logic card by energizing the driver with either one of these cards pulled out. If either of these cards loads DFS down, it should be replaced and the test repeated. If DFS is pulled down with both cards pulled, the Inverter card should be replaced and the operation checked.

   c) If the DFS voltage is above 18 volts, but the CUV light stays on when the fault is reset with the Stop pushbutton (or external fault reset), disconnect the DPL wire harness from driver. If the CUV light can then be reset, the problem is in one of the Pulse Transformer cards on the converter module, or in the DPL wire harness. Refer to Converter Troubleshooting in this section.

   d) If the DFS voltage is above 18 volts, and the CUV light does not indicate until the inverter is started (to start the motor), disconnect driver wire harnesses APL, BPL and CPL. If the CUV light still comes on when a drive start is initiated, the problem is in one of the Pulse Transformer cards on the commutation power supply, or in the EPL wire harness. Refer to the Commutation Power Supply Troubleshooting in this section. If the CUV light does not come on, stop the drive and connect only one of the (APL, BPL or CPL) wire harnesses to the driver and check for the CUV light when a drive start is initiated, with the driver reference set at zero.

DRIVER TROUBLESHOOTING (continued)

CAUTION

NEVER TRY TO START THE INVERTER WITH TWO OF THE THREE (APL, BPL OR CPL) WIRE HARNESSES CONNECTED, WHEN THE MOTOR IS CONNECTED TO THE DRIVE. ALSO THE DRIVER REFERENCE SHOULD NEVER BE INCREASED FROM ZERO WITH ANY OF THE WIRE HARNESSES DISCONNECTED, UNLESS THE D.C. LINK IS OPENED. (SEE INVERTER MODULE TROUBLESHOOTING).

If the CUV light comes on when any one wire harness is connected, the problem is in one of the Pulse Transformer cards on the inverter module related to that wire harness, or in the wire harness itself: Refer to Inverter Module Trouble–shooting in this section.

4. LOV and IFT (and COC, ITOC) fault lights on.

   a) Check that the slowdown control is connected. On driver receptacle G, terminal 23 should be connected to term. 7.

   b) Check for overhauling load or for excessive a.c. supply voltage.

   c) Check that the link voltage feedback and the converter voltage feedback at driver receptacle F, terminals 15 & 21 are at the same voltage to common. If their voltage levels are different, either the Converter card is defective or the problem is in the EPL wire harness or its connections to the power circuit. Check the FUP1, FUP11 and FUP2 voltage feedback fuses on the commutation power supply. Replace the Converter card and check the operation.

5. ITOC (and IFT) fault lights are on.

   a) Check the inverter a.c. output current feedback signals for all three phases, over the whole operating range of the drive. These can be read on Meter card positions 7, 8 and 9 using the AC (X10) scale, or with an oscilloscope by probing receptacle K, terminals 13, 12 and 11, for phases A, B and C respectively. The normal feedback signal voltage is 1 volt rms for rated load, or a reading of 10 on the Meter card. See Figure 7 for the wave shape of a normal motor current feedback signal. An instantaneous ITOC trip should not occur until the Meter card reads over 17 volts, or until the peak of the current feedback reaches about 3 volts as seen on the oscilloscope.

   b) If one of the current feedback signals is significantly larger than the others, shut down the drive and check the Current Feedback card on the inverter phase module of the phase in question. Check that the jumper is connected to the proper XA, XB or XC post (for the correct card group number) as given in Table 2 of the Current Feedback card printed circuit diagram, based on the drive nameplate output rms amp rating. Check that jumper placement is the same on all three inverter phase modules. Temporarily remove the wires to the J3 and K3 card posts and measure the resistance between K3 and K4, comparing it with the correct value given in Table 2. Replace this card if it appears to be defective and check drive operation.

   c) Check the current limit CLIM potentiometer setting on the Regulator card to see if it is too low for the motor loading. If shutdown occurs because the motor cannot get started, check the voltage boost VB setting. Refer to Adjustments section.

   d) Check the FUP1, FUP11 and FUP2 voltage feedback fuses on the commutation power supply. Refer to Commutation Power Supply Troubleshooting in this section.

   e) If a transformer is used between the power unit and the motor, check the settings of the MINF and VB potentiometers. Increase the minimum frequency by turning MINF clockwise and decrease the voltage boost by turning VB counter–clockwise, until the drive

DRIVER TROUBLESHOOTING (continued)

can be started and stopped satisfactorily.

6. Cannot reset fault lights.

   a) Check that fault is not a maintained fault that has not been cleared.

   b) Check that the OSTOP input at driver TB12 is low (near common) and that 1XFR input at driver TB14 is high (near +20 volt). If they are not, check the system control (refer to the system elementary diagrams).

   c) Check that the ORRO readout at driver TB20 is high and the OMVFRO readout at driver TB21 is low. If they are not, check the d.c. link voltage. Meter card, pos. 4 should read 1.5 or less, and the P11 to P2 voltage should read no higher than 30 volts d.c. (230 volt a.c. drives) or 60 volts d.c. (460 volt a.c. drives). If inconsistent or higher voltages are read, refer to part 7 c).

   d) If the above four logic signals are correct, try replacing the System card and checking operation.

7. Drive shuts down (not fault lights on), or drive will not start (no fault lights on)

   a) Check that the OSTOP input at driver TB12 is high (near +20 volt) and the OSTART input at TB13 is low (near common). If they are not, check the system control (refer to the system elementary diagrams).

   b) Check that the ORRO readout at driver TB20 and the OMVFRO readout at TB21 are both low. If they are not, check that the 1FTRO fault readout at driver TB19 is low. Also check the d.c. link voltage. Meter card pos. 4 should read 1.5 or less, and the P11 to P2 voltage should read no higher than 30 volts d.c. (230 volt a.c. drives) or 60 volts d.c. (460 volt a.c. drives).

   c) If inconsistent or higher d.c. link voltages are present when the drive is at standby, check the voltage feedback fuses FUP1, FUP11 and FUP2 on the commutating power supply. If these are all right, check the converter reference voltage CVR (Meter card, pos. 6 or driver receptacle K, term. 14). If this voltage to common is about 10 volts, the problem is either in the Converter card or in the converter power module. Refer to Converter Troubleshooting in this section. If the CVR voltage to common is less than 8, then the problem is either in the Regulator card or in the System card. Try replacing each card separately and checking the operation

8. If light not indicating, or on continuously at standby.

   a) Check the +10 volt (Meter card, pos. 1) and +20 volt (TB7 to TB8) control voltage. If they are zero, but 115 volt a.c. appears between driver TB1 and TB2, check the fuse FU1 on the Power Supply card. If no voltage is present between TB1 and TB2, check the control power transformer and its fuse (see system elementary diagram)

   b) If +20 volt control power is all right, check the IPAD signal at driver TB37 with an oscilloscope. If a square wave frequency is present, replace the System card and check the operation. If no frequency appears at IPAD, check the OCPD signal at TB38. If there is no pulse frequency signal at OCPD (consists of 10 to 35 usec, wide, low going pulses), replace the Regulator card and check operation. If frequency pulses appear at OCPD, check the ICFF signal at Meter card, pos. 15 or receptacle K, term. 5. If high going frequency pulses appear at ICFF, replace the Phase Logic card and check operation. If no frequency pulses appear at ICFF, replace the Inverter card and check operation.

9. SCR firing signals not reaching power modules.

   a) Check that there are no fault lights indicating and that the 1FTRO fault readout at driver TB19 is low. If a fault has occurred, it will lock out all firing signals.

DRIVER TROUBLESHOOTING (continued)

9. (continued)

Clear the fault and reset the fault circuits to enable the firing signals.

b) Converter firing signals should be present at drive standby. Check for firing signals at driver receptacle F, terminals 26 thru 31. Use either the red wire back plane selector probe with the Meter card, pos. 19 and compare with readings on the driver label, or use the black or violet wire back plane selector probes with an oscilloscope connected to driver TB39 (SEL1) or TB40 (SEL2) and common, and compare with the wave shapes of Figure 8.

c) If any firing signals are present at the driver but missing at the converter modules, check the plug connections at both ends of wire harness DPL for loose pins or bad connections, and check the wire harness for broken wires. If any firing signals are missing or faulty at the driver, replace the Converter card and check the operation.

d) Inverter firing signals will not be generated until the drive is started. Check that Meter card, pos. 11 reads high or that driver TB20 (ORRO) reads low. Check for firing signals at driver receptacle D terminals 5 through 19. Use either the red wire back plane selector probe with the Meter card, pos. 19 and compare with the readings on the driver label, or use the black or violet back plane selector probes with an oscilloscope connected to driver TB39 (SEL1) or TB40 (SEL2) and common, and compare with the wave shapes of Figure 9.

e) If any firing signals are present at the driver but missing at the inverter modules or commutation power supply, check the plug connections at both ends of the appropriate wire harness APL, BPL, CPL or EPL (refer to driver elementary diagram). Check the plugs for loose pins or bad connections, and check the wire harness for broken wires. If any firing signals are missing or faulty at the driver, replace the Phase Logic card and check the operation.

COMMUTATION POWER SUPPLY TROUBLESHOOTING

The commutation power supply contains the fan or blower fuses, and d.c. link and a.c. supply feedback fuses, in addition to the commutation power circuits. To help in troubleshooting this module, refer to the Commutation Power Supply elementary diagram and to the simplified overall power circuit of Figure 4. Since practically all of the circuitry on this module is at a.c. supply potential, troubleshooting should be done with the a.c. power off. Wait 1 minute after disconnecting power before doing any checking, to allow capacitors to discharge.

1. Fan or blower fuses

   If the fan or blowers are not operating, check the lower three fuses FUB1, FUB2 and FUB3. If one or more are blown, check for motor or blower binding and for motor winding shorts. Replace blown fuses and check operation.

2. A.C. Supply fuses

   If the PS/LOP light in the driver is indicating check the middle three fuses, FUL1, FUL2, and FUL3. If one or more are blown, check the commutation power supply diodes, SCR's and filter capacitor for failed devices (see 4., 5. and 6.) Replace blown fuses and check operation.

3. Voltage feedback fuses

   If the driver voltage feedback signals do not agree with the measured d.c. link voltages, check the upper three fuses FUP1, FUP11 and FUP2. If FUP2 is blown, check the commutation power supply filter capacitor and resistor (see 6. and 7.). Replace blown fuses and check operation.

4. Diodes AD1, AD2 and AD3

   The commutation power supply diodes may be checked with a volt–ohmmeter selected to read ohms on the X 1K scale. First lift one end of fuses FUL1, FUL2 and FUL3 to isolate the diodes from the a.c. line, and check for blown fuses. Connect one lead of the volt–ohmmeter to any one of the top row of SCR heat sink plates, and the other lead to the L1F, L2F or L3F fuses. Good diodes will provide an almost infinite resistance in the reverse direction and a low reading in the forward direction. Failed diodes will read almost zero resistance in both directions (shorted) or infinite resistance in both directions (open).

   If any diodes appear to be failed, refer to the Maintenance and Repair section for disassembly and replacement information. The SCR's, filter capacitor and resistor, and wiring should also be checked for damage before repairing the assembly, reinstalling, and checking operation.

5. SCR's ASA, ASB and ASC (and snubbers).

   The commutation power supply SCR's may be checked with a volt–ohmmeter selected to read ohms on the X 1K scale. On 460 volt a.c. drives, connect one lead to any one of the top row of SCR heat sink plates and connect the other lead to each of the bottom row heat sinks. Good SCR's will provide an almost infinite resistance in both the forward and reverse directions, while failed SCR's will read zero in one or both directions. Check the other three SCR's by connecting the meter between the bottom row ASA, ASB, or ASC heat sinks and the NXA, NXB or NXC terminals respectively. This also pertains to 230 volt a.c. drives where there are only three SCR's.

   If any SCR's appear to be failed, refer to the Maintenance and Repair section for disassembly and replacement information. The SCR's should be rechecked after their leads have been disconnected from the other circuitry. See the Checking SCR's portion of this section. The RC snubbers around the SCR's, diodes, filter capacitors and resistor, SCR chokes, and wiring should also be checked for damage before repairing the assembly, reinstalling, and checking operation.

6. Filter capacitor CFA, Resistor RA and Chokes LXA, LXB and LXC.

   The filter capacitor may be checked with a volt–ohmmeter to determine if it charges up or is shorted. Also refer to DC Link Filter Troubleshooting in this section for further information on electrolytic capacitor inspection.

   The filter resistor and SCR chokes may be checked with a volt–ohmmeter to determine if they are open or shorted. Refer to the Maintenance and Repair section for disassembly and replacement information.

COMMUTATION POWER SUPPLY TROUBLESHOOTING (continued)

7. Checking Pulse Transformer Cards

The Pulse Transformer cards on the front of the assembly may be checked with an oscilloscope to see if SCR firing signals from the driver are being applied to the pulse transformers. Connect the ground lead of the oscilloscope to the card 1COM or 2COM terminal, and connect the probe lead to the top (cooling) tab of one of the red power transistors. A normal pulse wave shape is shown in Figure 10. Change the oscilloscope probe lead to the top tab of the other red power transistor to check the other half of this dual channel card. If normal pulses are observed when the inverter is operating, the card is probably good. If no pulses are observed, connect the oscilloscope probe to the FS1 or FS2 input terminals to check for driver firing signals. See Figure 9 for normal firing signals. Also check for +20 volt firing power at +20A or +20B input terminals. If input firing power and firing pulses are present, then the card is probably defective. Replace the card and check operation. If no input power or firing pulses are present, refer to part 9 of Drive Shuts Down, or Will Not Start in the Driver Troubleshooting portion of this section.

INVERTER MODULE TROUBLESHOOTING

Each of the three identical inverter modules contains the power circuitry for one phase of the three phase inverter. To help in troubleshooting these modules, refer to the Inverter Phase Module elementary diagram and to the simplified overall power circuit of Figure 4. Since practically all of the circuitry on these modules is at a.c. supply potential, troubleshooting should be done with the a.c. power off where possible. Wait 1 minute after disconnecting power before doing any checking, to allow capacitors to discharge.

1. Checking SCRs, Diodes and Snubbers

The inverter phase module SCRs and diodes can be checked, with the power off, without disconnecting anything. The measurement points for the two types of phase modules are as follows:

30 TO 100 KVA

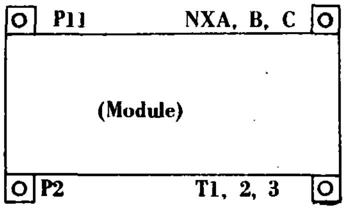

125 TO 400 KVA

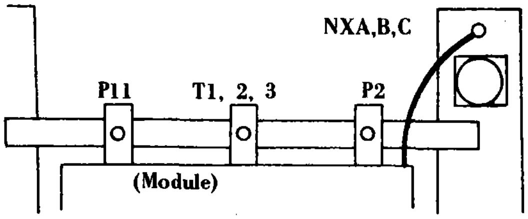

T(1,2,3)	to P11	checks positive inverter SCR and diodes
T(1,2,3)	to P2	checks negative inverter SCR and diodes
NX(A,B,C)	to P11	checks positive commutation SCR
NX(A,B,C)	to P2	checks negative commutation SCR

Using a volt–ohmmeter selected to read ohms on the X1 ohm or X 10 ohm scale, the normal readings indicating good devices are as follows, with the positive meter lead connected to the first point.

P11 to T(1,2,3)	High resistance
T(1,2,3) to P11	Low resistance
P2 to T(1,2,3)	Low resistance
T(1,2,3) to P2	High resistance
P11 to NX(A,B,C)	High resistance
NX(A,B,C) to P11	High resistance
P2 to NX(A,B,C)	High resistance
NX(A,B,C) to P2	High resistance

If any of the above readings are zero, the phase module should be disconnected from the rest of the power circuitry at terminal points P11, P2, T(1,2,3) and NX(A,B,C). (The phase module may have to be pulled partly out to accomplish this.) Recheck the above readings at the disconnected phase module terminals. If the readings still indicate a bad device, refer to the Maintenance and Repair section for removal, disassembly and replacement information. The individual SCRs and diodes should be rechecked when they are disconnected from each other to ensure that a short in one device does not produce a faulty reading across another device. See the Checking SCRs portion of this section.

Whenever a phase module has been removed for replacement of SCRs or diodes, the RC snubber circuits around the SCRs, commutating capacitors and choke, leg chokes and wiring should be inspected and checked for damage.

2. Checking Commutating Capacitors CCA, CCB, and CCC

These capacitors may be checked by connecting the volt–ohmmeter, selected to the X 1K scale, between NXA and T1, NXB and T2, or NXC and T3. A good capacitor will read above 100K resistance (after a brief charging period) whereas a bad capacitor will give a low or zero reading. The capacitors should be checked again after the phase module has been removed and the capacitors have been disconnected from the other power circuitry. Refer to the Maintenance and Repair section.

3. Inverter Phase Module Operational Test

If checking all phase module SCRs, diodes and commutation capacitors according to the preceding instructions does not indicate any failed devices, but inverter fault shutdowns still occur, the following procedure should be used to locate the problem.

INVERTER MODULE TROUBLESHOOTING (cont.)

3. (continued)

Interrupt the d.c. link between P1 and P11 to prevent power flow from the converter into any inverter fault condition. This is easiest to accomplish on 30 through 100 KVA drives by disconnecting both the cable and control wire from one side of the L1 reactor, connecting the cable and wire together, and taping the connection. On 125 through 200 KVA drives, this is accomplished by disconnecting and taping the P1 cable from the left, top power terminal of the converter module, keeping the P1 control wire (going to the commutation power supply) connected to the converter P1 terminal On 250 through 400 KVA drives, this is accomplished by loosening the converter module P1 terminal, disconnecting the P1 bus bar at the right angle joint and rotating and securing (or taping) the bus bar to interrupt the P1 circuit, making sure that the P1 control wire (going to the commutation power supply) is connected to the converter module side of the break point.

With the d.c. link disconnected between P1 and P11, the drive can be started and the inverter operated up to full reference. With the motor disconnected from the inverter, the P11 to P2 d.c. link voltage will build up somewhat as the reference is increased. With the motor connected to the inverter, the d.c. link will stay close to zero. The maximum inverter frequency that can be obtained at full reference will be limited to less than half of rated by the below normal d.c. link voltage. Except for these differences from normal, the inverter can be operated to check out the inverter SCR firing and commutation operation without danger of further damaging the equipment if a fault problem is present. In addition, by disconnecting the plugs of two of the three wire harnesses APL, BPL or CPL, just one phase module can be operated at a time to simplify checking and to help in pin–pointing the probelm.

The inverter phase commutations can be checked in the driver by checking the commutation current feedback signals. The peak value of commutation current can be read on the Meter card selected to positions 16, 17 and 18 for phases A, B and C respectively. (See the driver label on the inside of the power unit door for normal readings.) The commutation current can also be read with an oscilloscope connected between driver TB39 (SEL1) and TB34 (COM), and using the black wire, back plane selector probe to connect to receptacle K terminals 32, 31 and 30 for phases A, B and C respectively. See Figure 6 for normal commutation current wave shapes.

4. Checking Pulse Transformer Cards

The Pulse Transformer cards on the front of the phase module may be checked with an oscilliscope to see if SCR firing signals from the driver are being applied to the pulse transformers. Connect the ground lead of the oscilloscope to the card 1COM or 2COM terminal, and connect the probe lead to the top (cooling) tab of one of the red power transistors. A normal pulse wave shape is shown in Figure 10. Change the oscilloscope probe lead to the top tab of the other red power transistor to check the other half of this dual channel card. If normal pulses are observed when that inverter phase is operating, the card is probably good. If no pulses are observed, connect the oscilloscope probe to the FS1 or FS2 input terminals to check for driver firing signals. See Figure 9 for normal firing signals. Also check for +20 volt firing power at +20A or +20B input terminals. If input firing power and firing pulses are present, then the card is probably defective. Replace the card and check operation. If no input power or firing pulses are present, refer to part 9 of Drive Shuts Down, or Will Not Start in the Driver Troubleshooting portion of this section.

CONVERTER MODULE TROUBLESHOOTING

To help in troubleshooting this module, refer to the Converter Module elementary diagram and to the simplified overall power circuit of Figure 4. Since practically all of the circuitry on this module is at a.c. supply potential, troubleshooting should be done with the a.c. power off where possible. Wait 1 minute after disconnecting power before doing any checking to allow capacitors to discharge.

1. Checking SCRs and Snubbers

The converter SCRs can be checked with the power off, without disconnecting anything. The measurement points for the two types of phase modules are as follows:

30 TO 100 KVA

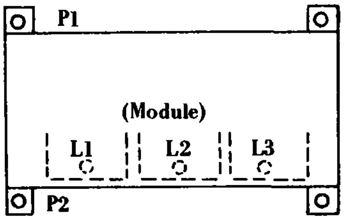

125 TO 400 KVA

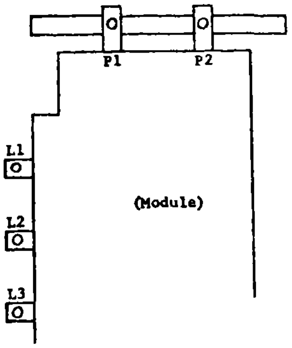

L1 to P1	Checks positive phase 1 SCR
L1 to P2	Checks negative phase 1 SCR
L2 to P1	Checks positive phase 2 SCR
L2 to P2	Checks negative phase 2 SCR
L3 to P1	Checks positive phase 3 SCR
L3 to P2	Checks negative phase 3 SCR

Using a volt–ohmmeter selected to read ohms on the X 1K scale, check across all six SCRs in both directions. Good SCRs should read over 100K in both the forward and reverse directions, while failed SCRs will read zero ohms in one or both directions.

If any SCRs appear to be failed, the converter module should be disconnected from the rest of the power circuitry at terminal points L1, L2, L3, P1 and P2. (The module may have to be pulled partly out to accomplish this.) Recheck the above readings at the disconnected converter module terminals. If the readings still indicate a bad device, refer to the Maintenance and Repair section for removal, disassembly and re–placement information. The individual SCRs should be rechecked when they are disconnected from the converter circuit to ensure that a short in one device does not produce a faulty reading across another device. See the Checking SCRs portion of this section.

Whenever the converter module has been removed for replacement of SCRs, the RC snubber circuit around the SCRs a.c. line chokes and wiring should be inspected and checked for damage.

2. Converter Module Operational Test

If converter misoperation is suspected, but all converter SCR's appear to be good, the following procedure should be used to perform an opera–tional test.

Interrupt the d.c. link between P1 and P11 to prevent any power flow from the converter from reaching the filter capacitor or inverter. This is easiest to accomplish on 30 through 100 KVA drives by disconnecting both the cable and control wire from one side of the L1 reactor, connecting the cable and wire together, and taping the connection. On 125 through 200 KVA drives, this is accomplished by disconnecting and taping the P1 cable from the left, top power terminal on the converter module, keeping the P1 control wire (going to the commutation power supply) connected to the converter P1 terminal. On 250 through 400 KVA drives, this is accomplished by loosening the converter module P1 terminal. disconnecting the P1 bus bar at the right angle joint and rotating and securing (or taping) the bus bar to interrupt the P1 circuit, making sure that the P1 control wire (going to the

CONVERTER MODULE TROUBLESHOOTING (cont.)

2. (Continued)

commutation power supply) is connected to the converter module side of the break point.

With the d.c. link disconnected between P1 and P11, the drive can be started and the converter operated up to full voltage. This will occur at full reference if the P1 control wire (for converter voltage feedback) has been connected to the converter module P1 terminal. The inverter will operate also, but at a low voltage and reduced frequency, with or without the motor connected.

The converter operation may be checked by means of the driver Meter card selected to position 5. The reading should change from 10 at zero reference to 5.5 at full reference. The converter output voltage may also be checked by connecting a volt–ohmmeter across the P1 to P2 terminals. The d.c. output voltage should be controllable from near zero to approximately 300 volts d.c. (230 volts a.c. input drives) or 600 volts d.c. (460 volt a.c. input drives).

If full output voltage cannot be obtained, it is possible that one or more converter SCRs are not firing, or that the driver is not putting out the proper signals. Refer to part 1, of Drive operates Improperly and part 9. of Drive Shuts Down, or Will Not Start under Driver Troubleshooting. If the driver is putting out the proper firing signals, check the converter Pulse Transformer cards. If these check out good, an open SCR or open gate SCR should be suspected. Refer to Checking SCRs to test for this problem.

3. Checking Pulse Transformer Cards

The Pulse Transformer cards on the front of the converter module may be checked with an oscilloscope to see if SCR firing signals from the driver are being applied to the pulse transformers. Connect the ground lead of the oscilloscope to the card 1COM or 2COM terminal, and connect the probe lead to the top (cooling) tab of one of the red power transistors. A normal pulse wave shape is shown in Figure 10. Change the oscilloscope probe lead to the top tab of the other red power transistor to check the other half of this dual channel card. If normal pulses are observed when the converter is operating, the card is probably good. If no pulses are observed, connect the oscilloscope probe to the FS1 or FS2 input terminals to check for driver firing signals. See Fig. 8 for normal firing signals. Also check for +20 volt firing power at +20A or +20B input terminals. If input firing power and firing pulses are present, then the card is probably defective. Replace the card and check operation. If no input power or firing pulses are present, refer to part 9 of Drive Shuts Down, or Will Not Start in the Driver Troubleshooting portion of this section.

CONVERTER MODULE TROUBLESHOOTING

To help in troubleshooting this module, refer to the Converter Module elementary diagram and to the simplified overall power circuit of Figure 4. Since practically all of the circuitry on this module is at a.c. supply potential, troubleshooting should be done with the a.c. power off where possible. Wait 1 minute after disconnecting power before doing any checking to allow capacitors to discharge.

1. Checking SCRs and Snubbers

The converter SCRs can be checked with the power off, without disconnecting anything. The measurement points for the two types of phase modules are as follows:

30 TO 100 KVA

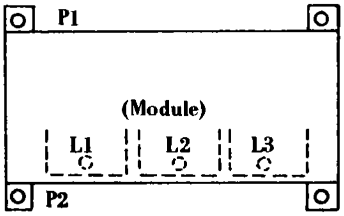

125 TO 400 KVA

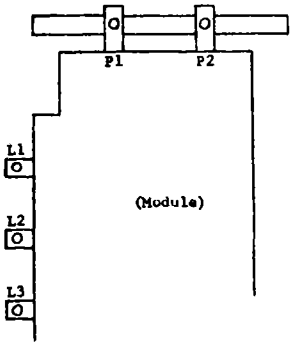

L1 to P1	Checks positive phase 1 SCR
L1 to P2	Checks negative phase 1 SCR
L2 to P1	Checks positive phase 2 SCR
L2 to P2	Checks negative phase 2 SCR
L3 to P1	Checks positive phase 3 SCR
L3 to P2	Checks negative phase 3 SCR

Using a volt–ohmmeter selected to read ohms on the X 1K scale, check across all six SCRs in both directions. Good SCRs should read over 100K in both the forward and reverse directions, while failed SCRs will read zero ohms in one or both directions.

If any SCRs appear to be failed, the converter module should be disconnected from the rest of the power circuitry at terminal points L1, L2, L3, P1 and P2. (The module may have to be pulled partly out to accomplish this.) Recheck the above readings at the disconnected converter module terminals. If the readings still indicate a bad device, refer to the Maintenance and Repair section for removal, disassembly and re–placement information. The individual SCRs should be rechecked when they are disconnected from the converter circuit to ensure that a short in one device does not produce a faulty reading across another device. See the Checking SCRs portion of this section.

Whenever the converter module has been removed for replacement of SCRs, the RC snubber circuit around the SCRs a.c. line chokes and wiring should be inspected and checked for damage.

2. Converter Module Operational Test

If converter misoperation is suspected, but all converter SCR's appear to be good, the following procedure should be used to perform an opera–tional test.

Interrupt the d.c. link between P1 and P11 to prevent any power flow from the converter from reaching the filter capacitor or inverter. This is easiest to accomplish on 30 through 100 KVA drives by disconnecting both the cable and control wire from one side of the L1 reactor, connecting the cable and wire together, and taping the connection. On 125 through 200 KVA drives, this is accomplished by disconnecting and taping the P1 cable from the left, top power terminal on the converter module, keeping the P1 control wire (going to the commutation power supply) connected to the converter P1 terminal. On 250 through 400 KVA drives, this is accomplished by loosening the converter module P1 terminal, disconnecting the P1 bus bar at the right angle joint and rotating and securing (or taping) the bus bar to interrupt the P1 circuit, making sure that the P1 control wire (going to the

CONVERTER MODULE TROUBLESHOOTING (cont.)

2. (Continued)

commutation power supply) is connected to the converter module side of the break point.

With the d.c. link disconnected between P1 and P11, the drive can be started and the converter operated up to full voltage. This will occur at full reference if the P1 control wire (for converter voltage feedback) has been connected to the converter module P1 terminal. The inverter will operate also, but at a low voltage and reduced frequency, with or without the motor connected.

The converter operation may be checked by means of the driver Meter card selected to position 5. The reading should change from 10 at zero reference to 5.5 at full reference. The converter output voltage may also be checked by connecting a volt–ohmmeter across the P1 to P2 terminals. The d.c. output voltage should be controllable from near zero to approximately 300 volts d.c. (230 volts a.c. input drives) or 600 volts d.c. (460 volt a.c. input drives).

If full output voltage cannot be obtained, it is possible that one or more converter SCRs are not firing, or that the driver is not putting out the proper signals. Refer to part 1, of Drive operates Improperly and part 9. of Drive Shuts Down, or Will Not Start under Driver Troubleshooting. If the driver is putting out the proper firing signals, check the converter Pulse Transformer cards. If these check out good, an open SCR or open gate SCR should be suspected. Refer to Checking SCRs to test for this problem.

3. Checking Pulse Transformer Cards

The Pulse Transformer cards on the front of the converter module may be checked with an oscilloscope to see if SCR firing signals from the driver are being applied to the pulse transformers. Connect the ground lead of the oscilloscope to the card 1COM or 2COM terminal, and connect the probe lead to the top (cooling) tab of one of the red power transistors. A normal pulse wave shape is shown in Figure 10. Change the oscilloscope probe lead to the top tab of the other red power transistor to check the other half of this dual channel card. If normal pulses are observed when the converter is operating, the card is probably good. If no pulses are observed, connect the oscilloscope probe to the FS1 or FS2 input terminals to check for driver firing signals. See Fig. 8 for normal firing signals. Also check for +20 volt firing power at +20A or +20B input terminals. If input firing power and firing pulses are present, then the card is probably defective. Replace the card and check operation. If no input power or firing pulses are present, refer to part 9 of Drive Shuts Down, or Will Not Start in the Driver Troubleshooting portion of this section.

CHECKING SCR'S

Disconnect the suspected SCR as much as possible from the remainder of the power circuitry. Using a volt–ohmmeter selected to read ohms on the times 1K scale, check the forward and reverse resistance of each individual SCR cell (See the Module Elementary diagram.) Good or faulty SCR's will give the following typical readings:

SCR Description	Forward Reading	Reverse Reading
Good SCR	100K to Infinity	100K to Infinity
Shorted SCR	Zero	Zero
Inoperative SCR	1 to 2K	100K to Infinity
Open SCR	100K to Infinity	100K to Infinity

Since an open SCR will give about the same resistance reading as a good SCR, another method must be used to find this type of fault. It should be pointed out, however, that practically all cells fail by shorting and very few by opening. If an open SCR is suspected, or if it is desired to check the switching operation of an SCR, the following circuit should be used:

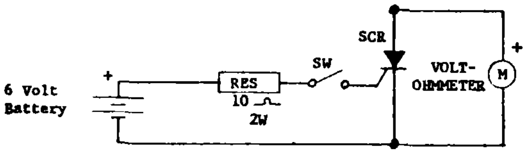

The volt–ohmmeter is selected to read ohms on the 1K scale, and is connected to read the forward resistance of the SCR. When switch SW is closed, the forward resistance of a good SCR will change from a high value (100K to infinity) to a low value (1 to 10K). When the switch is opened, a good SCR will revert to its high forward resistance or blocking state if the holding current source (volt–ohmmeter battery) is momentarily removed. A faulty SCR will not switch, remaining in either an open or a conducting state.

If any SCR's are suspected of being faulty from the above resistance checks, the SCR conversion module should be removed from the case. After the SCR (cathode) and gate leads have been disconnected, recheck the forward and reverse resistances before replacing the SCR.

This should be done before the SCR is definitely classified as damaged or faulty, since a fault in another SCR or another part of the circuitry can produce a faulty reading from a good SCR before it is disconnected from the circuit. After a Press–Pak SCR is removed from the heatsink it may read open due to lack of pressure against the internal cell structure. Apply pressure to obtain a true reading.

DC LINK FILTER TROUBLESHOOTING

The d.c. link filter consists of the L1 filter choke and the C1 filter capacitor assembly.

1. C1 Filter Capacitor Assembly(s)

   This consists of one or more assemblies of paralleled (230 volt a.c. drives) or series–parallel–ed (460 volt a.c. drives) electrolytic capacitors. When the drive has not been operated for 6 months or more, these capacitors start to degrade and their leakage current increases. A procedure called forming is required to return the electro–lytic capacitors to their rated operating capability. Refer to step 13 of the Start–up Procedure in the Start–up and Check–out section for the proper forming procedure.

   Electrolytic capacitors can fail by shorting, can exhibit excessive leakage current, or can dry up and lose their capacitance. The latter usually results from a ruptured vent plug due to "gassing" from excessive current and/or temperature.

   The filter capacitor assembly can be checked for shorted capacitors using a volt–ohmmeter after the power has been off for more than 1 minute and the P11 to P2 voltage is less than 10 volts. On 460 volt a.c. drives with seriesed capacitors, the assembly can be checked for excessive leakage capacitors by checking the mid–point, or Q point, voltage when the drive is operating. Using a volt–ohmmeter, check the difference between the P11 to Q and the Q to P2 voltages at maximum d.c. link voltage. This difference should not exceed 5% of the P11 to P2 voltage. If the above tests indicate either a short–ed or leaking capacitor, the filter assembly should be removed and disassembled to the point where the resistance of each capacitor can be individually checked. Refer to the Maintenance and Repair section for instructions. Any shorted or leaky capacitors should be replaced. The remaining capacitors should be inspected for ruptured vent plugs according to the following instructions.

   The best way of evaluating the condition of the electrolytic capacitors is to visually inspect their vent plugs. These are 3/16" diameter red plugs in the top cover of the capacitor case. Internal gas pressure can cause a bubble to form in this plug and the red color will lighten until it is almost white. Eventually the plug will rupture. However, this does not cause an immediate capacitor failure. but will result in a gradual loss of capacitance. Any electrolytic capacitors which are found to have ruptured plugs should be replaced as soon as conveniently possible. If any capacitor vent plug contains a bubble larger than 1/16" in diameter, the capacitor assembly should be inspected at the next sched–uled shutdown or planned maintenance for rup–tured vent plugs.

   If more than 25% of the capacitors have broken vent plugs, and the drive has been operated over 20,000 hours, consideration should be given to replacing all of the capacitors in the filter assembly. Refer to the Maintenance and Repair section for instructions.

2. L1 Filter Choke

   This choke should be visually checked for signs of overheating, damaged insulation or loose con–nections.

MISCELLANEOUS TROUBLESHOOTING CHECKS

The following check list of miscellaneous items is included to provide additional directions of investigation in troubleshooting this drive.

A. Cooling and Temperature Problems

1. Check for sufficient air flow through power unit.
2. Check if blower or fan rotation is correct.
3. Check if air filters are clean (if provided).
4. Check if intake air is below 40°C.
5. Check for adjacent heat sources
6. Check for recirculation of discharge air.
7. Check if room ventilation is adequate to remove the heat being produced.

B. Input Power

1. Check for correct voltage (within +10%, 5% of nameplate rating) and frequency.
2. Check for balanced phase voltages.
3. Check for transient over or under voltages.
4. Have transient voltages occurred due to lightning or ground faults?
5. Check for excessive line regulation due to a high impedance (soft) a.c. supply.
6. Is a.c. supply grounded or ungrounded?
7. Is the available short circuit current too high?
8. Are there power factor correction capacitors causing harmonics, or their switching causing voltage transients.

C. System Grounds

1. Check that the power unit case is properly grounded.
2. Check for grounds in motor windings or in power cables to the motor.
3. Check for grounds in control wiring.

D. Loose or Shorted Connections

1. Check incoming power connections.
2. Check connections to power modules, filter capacitor and choke, circuit breaker or fuses, etc.
3. Check outgoing power connections to starters, motors, etc.
4. Check incoming control wiring connections

D. (continued)

5. Check connections to Pulse Transformer cards and Current Feedback cards on power modules.
6. Check for bent terminals shorting to one another on driver back plane.

E. Electrical Noise

1. Check that all power unit relays have RC suppression on their coils.
2. External relays, solenoids, brakes, etc. interfacing with the power unit should also be suppressed.
3. Check for other external sources of electrical noise.

F. Output Load

1. Check starting torque requirements.
2. Check for transformer saturation at low frequencies if output transformer is used.
3. Check for motor overloads or jam–ups.
4. Check operation of motor transfer switching.

INVERTER COMMUTATION CURRENT WAVE SHAPE

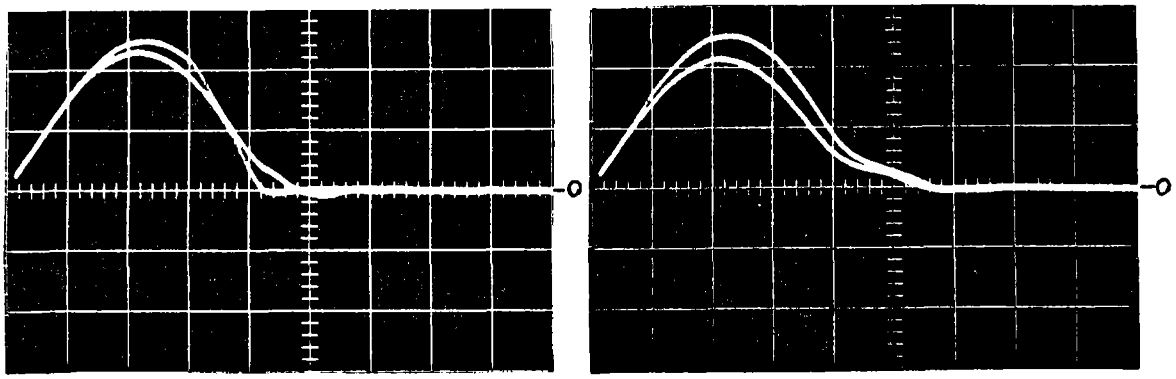

At 1/2 rated voltage & frequency

At rated voltage & frequency

10 µsec./div. (230V AC Drives)
20 µsec./div. (460V AC Drives)

5 Volts division

FIGURE 6

MOTOR CURRENT WAVE SHAPE

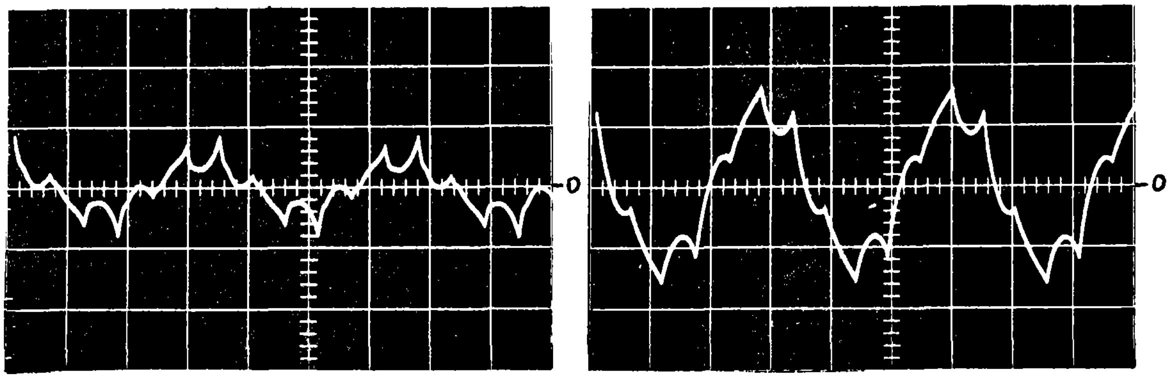

At half speed and low load

At full speed and full load

10 msec./div.
1 volt/div.

5 msec./div.
1 volt/div.

FIGURE 7

CONVERTER FIRING SIGNALS

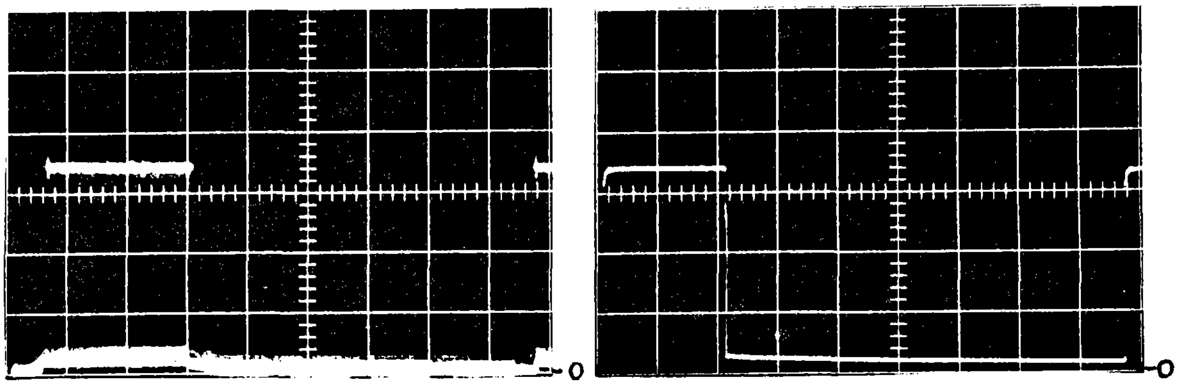

2 msec./division
5 volts/division

5 μsec./division
5 volts/division

FIGURE 8

INVERTER FIRING SIGNALS

Top trace - A, B, CCP - Positive commutation SCR firing signal
Middle trace- A, B, CA - Commutation power supply SCR firing signal
Bottom trace- A, B, CIN - Negative inverter SCR firing signal

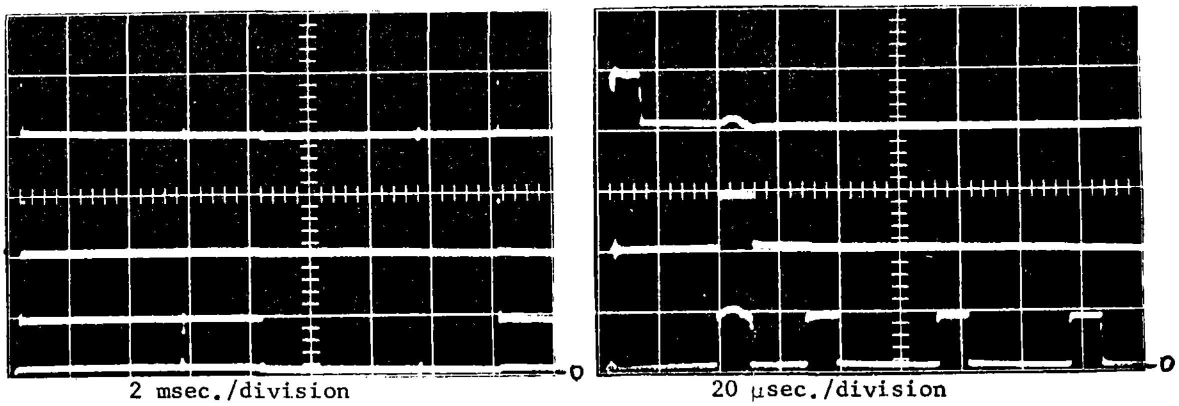

2 msec./division
20 volts/division

20 μsec./division
20 volts/division

FIGURE 9

PULSE TRANSFORMER CARD PULSE WAVE SHAPE

At FS1 or FS2 card input

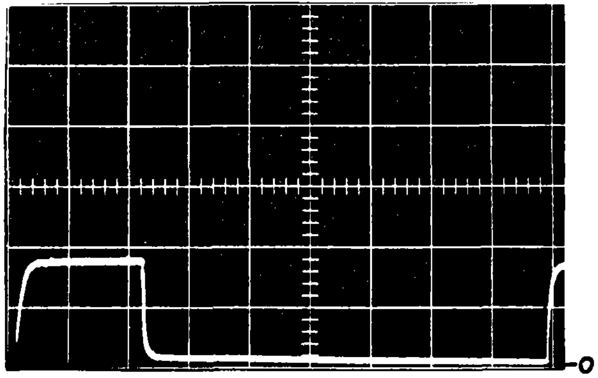

5 μsec./division
10 volts/division

At power transistor tab

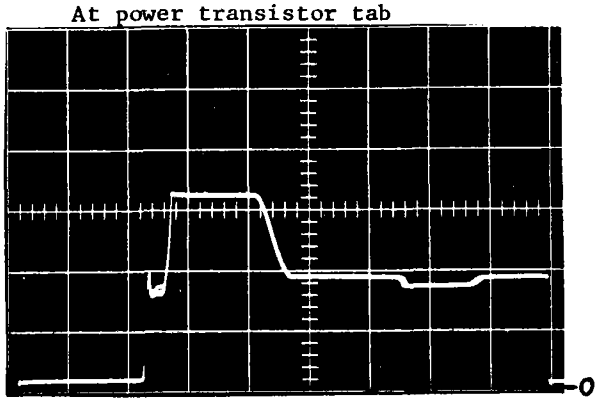

5 μsec./division
10 volts/division

FIGURE 10

MAINTENANCE AND REPAIR

WARNING

ELECTRIC SHOCK CAN CAUSE PERSONAL INJURY OR LOSS OF LIFE. WHEN POWER OFF MAINTENANCE IS BEING PERFORMED, VERIFY ALL POWER TO THE DRIVE IS SWITCHED OFF OR DISCONNECTED. RECOMMEND POWER SWITCHES BE RED–TAGGED DURING POWER OFF MAINTENANCE.

MECHANICAL INSPECTION

The mechanical maintenance required for the drive system is divided into two basic units; power unit and motor. The power unit's only mechanical maintenance is checking and changing the air filters before they become clogged. (if furnished)

Motor maintenance is covered by the motor instruction book supplied with the motor and should be followed in all cases.

ELECTRICAL INSPECTION

Power off (every six months): Check all electrical connections for tightness. Look for signs of poor connections or overheating (arcing, discoloration). Manually check cooling fan/blower for easy rotation.

POWER MODULE REPAIR

The removal, repair and replacement instructions vary depending on the type of power module and its KVA rating. Refer to the instructions which follow under the specific heading which applies to your drive.

If minimized down time is a critical factor, it is recommended that a complete inverter phase module of your drive rating be stocked as spares.

INVERTER PHASE MODULE REPLACEMENT – 125 to 400 KVA

1. Tools required:

   Table – 30" high
   Screw Driver – 8" long blade, 5/16" shank
   Deep Socket – 1/2" for 3/8" ratchet
   Ratchet – 3/8"
   Nut driver – 5/16" with 6" blade
   Nut driver – 3/8" with 6" blade

2. Open all electrical circuits to the case in which the phase module is located.

3. Check voltage across capacitor tray (P11 to P2) with a d.c. voltmeter. The capacitor discharge resistor should have reduced this voltage to 10 volts or below before work starts in the case.

4. Disconnect firing lead plug A, B, CPL.

5. Disconnect NXA, B, C lead from the terminal post.

6. Remove three captive nut–washer assemblies from Power Busses P11, P2 and T1, 2, 3 above the module.

7. Remove the retaining angle below the module.

   NOTE: This angle is used to help secure the module during shipment or when high case vibration is encountered. Normally this angle can be discarded after drive installation.

8. Place a 30" high table in front of the case beneath the module.

9. Pull the module out of the rack onto the table using the red insulation cover in front of the module. (See Figure 11)

10. The module can be repaired on the table. (See Press–Pak* Cell Replacement – Phase Module)

11. To install the repaired module or a spare module, first set the module upright on a 30" high table in front of the inverter case.

12. Lift the back end of the phase module onto the inverter rack. Lift the front end of the phase module and slide the assembly into the rack using the red insulation cover in front of the module.

13. Reconnect the power busses P11, P2 and T1, 2, 3, the NXA, B, C control lead and the firing lead plug A, B, CPL.

14. Check to see that all electrical connections are tight before re–applying power.

---

* Trademark of General Electric Company U.S.A.

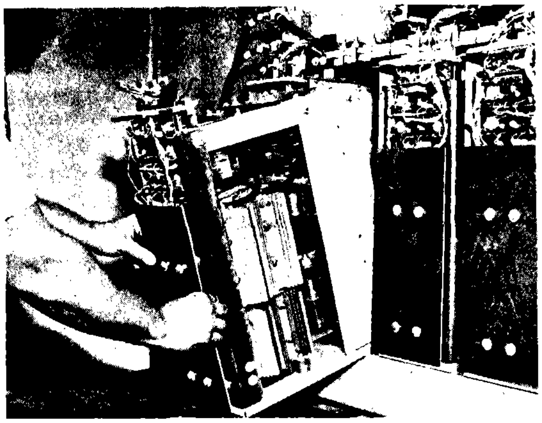

(Photo MG-5400-3)

FIGURE 11 – REMOVING AN INVERTER PHASE MODULE
(Also Applies to Converter Module)

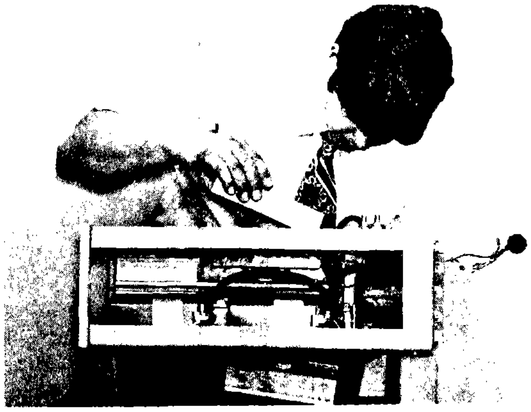

(Photo MG-5400-2)

FIGURE 12 – REPAIRING AN INVERTER PHASE MODULE
(Also Applied to Converter Module)

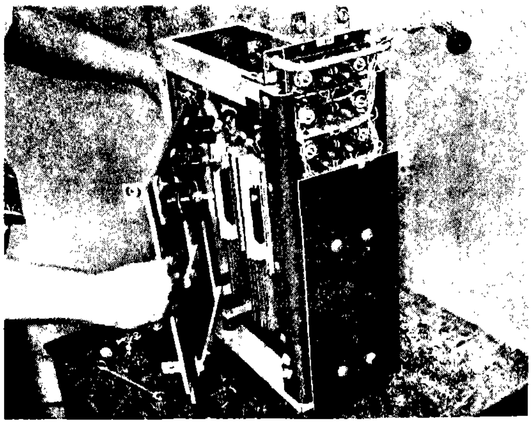

(Photo MG-5400-1)

FIGURE 13 – REPAIRING A CONVERTER MODULE

PRESS–PAK CELL REPLACEMENT – PHASE MODULE

1. Tools required:

   2 wooden blocks – 4" x 4" x 12"
   Ratchet – 3/8"
   Ratchet extension – 3/8", 6" long
   Deep socket – 1/2" for 3/8" ratchet
   Deep socket – 9/16" for 3/8" ratchet
   Screw driver – 8" long blade, 5/16" shank

2. Disconnect the electrical connections to both heatsinks associated with the clamp containing the faulty cell (SCR or diode).

3. Lay phase module on its side with the heatsink clamp nuts up. The module top frame should rest on one wooden block, and the bottom frame on the other block; the blocks being positioned to permit hand access to the bottom heatsink associated with the faulty cells clamp. (See Figure 12)

4. Supporting the bottom heatsink and clamp with one hand underneath the module, loosen and remove the two clamp nuts.

5. NOTE CAREFULLY THE ARRANGEMENT OF THE CLAMP PARTS AND THE CELL ORIENTATION.
6. Remove the bottom heatsink and cell by dropping the assembly so the clamp rods are free.

7. The faulty SCR should have its gate and cathode leads with faston terminals disconnected from the Pulse Transformer card and the SCR (or diode) should be removed from the assembly. The gate and cathode leads of the replacement SCR should be connected to the Pulse Transformer card per the phase module elementary diagram.

8. The other cell associated with the clamp assembly should be carefully lifted from the module mounting surfaces.

9. Inspect the surfaces that both cells mount between. These surfaces should be wiped clean with a lint–free cloth. Inspect the surfaces and make sure they are smooth; if not smooth, replace the heatsink assembly.
10. Lubricate both mounting surfaces for each cell with a drop of silicone oil. SF1153* silicone fluid (or equivalent thermal compound).

11. Place both cells in the same orientation as in the original assembly, and place the cell center holes over the roll pin in the mounting surface. NOTE: The bottom cell fits over a roll pin in the heatsink and the top cell fits over a roll pin in the plate.

12. The clamp parts and heatsinks should be assembled in the original manner and the two nuts tightened finger tight so that the threads showing are the same on both clamp rods.

13. Check to see that the cell center holes are still over the roll pins.

14. With the nuts finger tight use a wrench to tighten each nut alternately in 1/6 turn steps until the clamp tightness is as specified in the following table:

Cell Nomen.	Clamp Tightness Number Turns over Finger Tight		
	400 KVA	300 KVA	200 KVA
ISP, ISN	*	*	2–3/6
DP, DN	2–3/6	2–2/6	2–2/6
CSP, CSN	2–2/6	2–2/6	2–2/6

NOTES:

* This clamp has a clamp tightness gauge. Tighten nut until the indicator notch marked "2" lines up with the bottom of the spring.

Unloaded the "O" land of gauge indicator should line up with bottom spring leaf

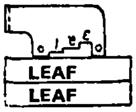

Loaded the "2" land of guage indicator should line up with bottom spring leaf

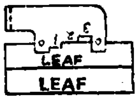

15. Reconnect all electrical connections to both heatsinks, and the SCR gate leads to the Pulse Transformer cards.

16. Check to see that all electrical connections are tight.

---

* Trademark of General Electric Company U.S.A.

CONVERTER MODULE REPLACEMENT – 125 to 400 KVA

1. Tools required:

    Table – 30" high
    Ratchet – 3/8"
    Nut Driver – 5/16"
    Deep Socket – 1/2" for 3/8" ratchet
    Deep Socket – 9/16" for 3/8" ratchet

2. Open all electrical circuits to the case in which the Converter Module is located.

3. Check voltage across capacitor tray (P11 to P2) with a d.c. voltmeter. The capacitor discharge resistor should have reduced this voltage to 10 volts or below before work starts in the case.

4. Disconnect firing lead plug DPL.

5. Remove five captive nut–washer assemblies from P1 and P2 busses above the module, and L1, L2 and L3 to the left of the module.

6. Remove the retaining angle below the module.

    NOTE: This angle is used to help secure the module during shipment or when high case vibration is encountered. Normally this angle can be discarded after drive installation.

7. Place a 30" high table in front of the case beneath the Converter Module.

8. Pull the module out of the rack onto the table using the red insulation cover in front of the module. See Figure 11.

9. The module can be repaired on the table. (See Press–Pak SCR Replacement – Converter Module)

10. To install the repaired or a spare Converter Module, first set the module upright on a 30" high table located in front of the Inverter case.

11. Lift the back end of the Converter Module onto the Inverter rack. Lift the front end of the module and slide the assembly into the rack using the red insulation cover in front of the module.

12. Reconnect the power terminals P1, P2, L1, L2 & L3 and the firing lead plug DPL.

13. Check to see that all electrical connections are tight before re–applying power.

PRESS–PAK SCR REPLACEMENT – CONVERTER MODULE

1. Tools required:

   Two blocks – wooden, 4" x 4" x 12" long
   Ratchet – 3/8"
   Deep Socket – 7/16" for 3/8" ratchet
   Deep Socket – 1/2" for 3/8" ratchet
   Wrench – 7/16" box
   Wrench – 3/4" box
   Screw Driver – 5/16" shank – 8" long blade
   Nut Driver – 1/4" with 6" blade

2. Disconnect the flexible power leads from the three ferrite core assemblies in the a.c. lines.

3. Remove the five 1/4" screw–nut assemblies which secure the insulation board containing the a.c. bus and ferrite core assemblies.

4. Remove the insulation board containing the a.c. bus and ferrite core assemblies from the Converter Module (see Figure 13).

5. Lay the Converter Module on its side with the heatsink clamp nuts up. The module top frame should rest on one wooden block, and the bottom frame on the other block; the blocks being positioned to permit hand access to the bottom heatsink associated with the faulty SCR's clamp (see Figure 12).

6. Remove the two clamp nuts securing the faulty SCR while supporting the bottom heatsink and clamp with one hand underneath the module.

7. NOTE CAREFULLY THE ARRANGEMENT OF THE CLAMP PARTS AND THE SCR ORIENTATION.

8. Remove the bottom heatsink and SCR by dropping the assembly to free the clamp rods.

9. The faulty SCR should have its gate and cathode leads with faston terminals disconnected from the Pulse Transformer card and the SCR should be removed from the assembly. The gate and cathode leads of the replacement SCR should be connected to the Pulse Transformer card per the converter module elementary diagram.

10. The other SCR associated with the clamp assembly should be carefully lifted from the heatsink mounting surfaces.

11. Inspect the surfaces that both SCR's mount between. These surfaces should be wiped clean with a lint–free cloth. Inspect the surfaces and make sure they are smooth; if not smooth, replace the heatsink assembly

12. Lubricate both mounting surfaces for each SCR using a drop of silicone oil, SF1153* silicone fluid (or equivalent thermal compound).

13. Place both SCR's in the same orientation as in the original assembly, and place the SCR center holes over the roll pin in the mounting surface.
    NOTE: The bottom SCR fits over a roll pin in the heatsink and the top SCR fits over a roll pin in the plate.

14. The clamp parts and heatsinks should be assembled in the original manner and the two nuts tightened finger tight so that the threads showing are the same on both clamp rods.

15. Check to see that the SCR center holes are still over the roll pins.

16. With the nuts finger tight use a wrench to tighten each nut alternately in 1/6 turn steps until the clamp tightness is as specified in the following table:

Inverter KVA	Clamp Tightness No. Turns over Finger Tight
400	2–3/6
300	2–3/6
200	2–2/6

17. Reconnect all electrical connections to both heatsinks and the SCR gate leads to the Pulse Transformer cards.

18. Re–install the insulation board containing the AC bus and ferrite core assemblies and bolt it in place.

19. Reconnect flexible power leads to the three ferrite core assemblies in the a.c. lines.

20. Check to see that all electrical connections are tight.

---

* Registered Trademark of General Electric Company U.S.A.

CONVERTER AND INVERTER MODULE REPAIR 30 to 100 KVA

1. Tools required:

   Ratchet – 3/8"
   Ratchet Extension – 3/8", 6" long
   Deep Socket – 7/16" for 3/8" ratchet
   Deep Socket – 1/2" for 3/8'. ratchet
   Deep Socket – 9/16" for 3/8" ratchet
   Screw Driver – 1/8" shank, 2" long blade
   Screw Driver – 3/8" shank, 4" long blade

2. Open all electrical circuits to the case in which the faulty module is located.

3. Check voltage across capacitor tray (P11 to P2) with d.c. voltmeter. The capacitor discharge resistor should have reduced this voltage to 10 volts or below before work starts in the ,case.

4. Remove the front cover from the module.

5. Remove faulty module from the case.

6. Remove printed circuit card cover from the heatsink assembly.

7. Remove heatsink assembly from its mounting bracket.

8. Remove the two nuts from the heatsink clamp containing the failed cell.

9. Remove failed cell (SCR or diode).

10. With a soft lint–free cloth, clean the aluminum plate and both heatsinks where both the failed cell and the other cell mount. Inspect all cell mounting surfaces to make sure they are smooth; if not smooth, replace the heatsink assembly.
11. Apply a small dab of G322L Versilube* (or equivalent thermal compound) to each side of the two cells being installed so that under pressure the compound will cover only the raised center cell surfaces.

12. Place the two cells in the same orientation as the original assembly.

13. The clamp parts should be assembled in the original manner and the two nuts tightened finger tight so that the number of threads showing are the same on both clamp rods.

14. **Check to see the cell holes are still over the heatsink roll pins.**

15. **With the nuts finger tight use a wrench to tighten each nut alternately in 1/6 turn steps, until the nuts have completed 2–1/3 turns each.**

16. **Reassemble the module and reinstall it in the case.**

---

* Registered Trademark of General Electric Company U.S.A.

COMMUTATION POWER SUPPLY REPAIR

1. Tools required:

   Ratchet – 3/8"
   Ratchet Extension – 12" long for 3/8" ratchet
   Deep Socket – 3/8"
   Nut Driver – 1/4" with 6" blade
   Nut Driver – 11/32" with 6" blade
   Screw Driver – 5/16" shank, 8" long blade
   Torque wrench – 30 lb.–in or slightly higher
   Socket – 7/16" (for torque wrench)
   Solder iron and Resin Core solder (non–acid)

2. Open all electrical circuits to the case in which the Commutation Power Supply is located.

3. Check the voltage across the capacitor tray (P11 to P2) with a d.c. voltmeter. The capacitor discharge resistor should have reduced this voltage to 10 volts or below before works starts in the case.

4. Disconnect all electrical connections to the Commutation Power Supply:

   Three wires to Fuse blocks FUP1, FUP11 FUP2
   Six wires to fuse blocks FUB1, FUB2, FUB3
   Seven wires to terminal board 1TB
   Three wires to terminal board 2TB
   Disconnect plug EPL

5. Remove flanged plug section from Commutation Power Supply frame.

6. Remove Commutation Power Supply Assembly from case by removing four mounting screws.

7. To replace an SCR in the Commutation Power Supply:

   Remove heatsink asm. containing two SCRs one of which is the faulty SCR.
   Unbolt the faulty SCR from the heatsink.
   Unsolder the cathode and gate leads to the faulty SCR.
   With a soft lint–free cloth, wipe clean the heatsink where the SCR mounts.
   Apply G322L Versilube* (or equivalent) thermal compound) to the heatsink SCR mounting surface.

7. (continued)

   Assemble SCR to heatsink as was done originally and tighten the SCR stud nut. The nut for 1/4" stud mounted SCR's should be torqued to 30 lb–in. Solder the cathode and gate leads to the new SCR.

8. Remount the Commutation Power Supply in the case.

9. Reconnect all wires checking for proper connection points.

10. Remount plug housing EPL to the Commutation Power Supply.

11. Reconnect the plug EPL.

---

* Registered Trademark of General Electric Company U.S.A.

FILTER CAPACITOR REPLACEMENT

1. Tools required:

   Ratchet – 3/8"
   Deep Socket – 7/16" for 3/8" ratchet
   Wrench – 7/16" box
   Screw Driver – 5/16" shank, 8" long blade

2. Open all electrical circuits to the case in which the Filter Capacitors are located.

3. Check voltage across capacitor tray (P11 to P2) with d.c. voltmeter. The capacitor discharge resistor should have reduced this voltage to 10 volts or below before work starts in the case.

4. Remove two screws which secure the capacitor tray to the rack.

5. Disconnect the P11 and P2 power leads to the capacitor tray.

6. Slide the capacitor tray from the rack.

7. When the faulty capacitor is replaced, make certain that the new capacitor is connected to the electrical circuit with the same polarity orientation as was the faulty capacitor.

8. Slide the repaired tray into the rack.

9. Reconnect all power leads.

10. Replace the two screws to secure the capacitor tray to the rack.

11. If the replacement electrolytic capacitors have been on the shelf (non operating) for longer than 6 months, they should be formed. Refer to step 13 of the Start–up Procedure in the Start–up and Check–out section for the proper forming procedure.

BLOWER REPLACEMENT – 125 to 400 KVA

1. Tools required:

   Ratchet – 3/8"
   Deep Socket – 7/16" for 3/8" ratchet
   Nut Driver – 5/16" with 6" blade
   Screw Driver – 5/16" shank, 8" long blade

2. Open all electrical circuits to the case in which the faulty blower assembly is located.

3. Check the voltage across the capacitor tray (P11 to P2) with a d.c. voltmeter. The capacitor discharge resistor should have reduced this voltage to 10 volts or below before work starts in the case.

4. Remove the cover from the air distribution chamber.

5. Remove from the blower assembly, which is being removed, the four mounting screws located inside the air distribution chamber.

6. Disconnect three power leads to the blower terminal board.

7. Slide the blower forward and lift it from the rack.

8. Slide the replacement blower into the rack.

9. Replace the blower mounting bolts.

10. Reconnect the three power leads.

11. Re–install the air distribution chamber cover.

12. Check all electrical connections to see that they are tight.

13. Apply power to the blower and note the rotation of the replacement blower blades. The rotation should be as shown on the rotation nameplate. (The rotation should be counter–clockwise looking into the blower intake and the blower blade should have its concave side as the leading side.)

    Should the rotation be clockwise, interchange any two power leads to the blower terminal board. When power is re–applied, the rotation will have reversed.

FAN REPLACEMENT – 30 to 100 KVA

1. Tools required:

    Ratchet – 3/8"
    Ratchet Extension – 3/8", 6" long
    Deep Socket – 1/2" for 3/8" ratchet
    Nut Driver – 5/16" with 6" blade
    Screw Driver – 5/16" shank, 8" long blade

2. Open all electrical circuits to the case in which the faulty fan assembly is located.

3. Check the voltage across the capacitor tray (P11 to P2) with a d.c. voltmeter. The capacitor discharge resistor should have reduced this voltage to 10 volts or below before work starts in the case.

4. If an air filter is supplied, it should be removed.

5. Disconnect the fan motor leads from the terminal board.

6. Remove the mounting bolts from the motor mounting bracket supporting the fan motor to prevent it from falling.

7. Remove the motor and fan assembly.

8. The repaired or replacement motor and fan assembly should be bolted in place positioning the fan blade so that its top edge is 0.9" into the entrance duct.

9. Reconnect the motor leads to the terminal board.

10. Check all electrical connections for tightness.

11. Apply power to the fan motor. Looking into the motor from the fan side, the rotation should be counter–clockwise, and the air flow will be toward the top of the case.

12. Open the electrical circuit to the fan motor. If the motor rotation was incorrect any two motor leads may be interchanged at the terminal board to correct this.

13. Re–install the air filter

INSTRUCTIONS

AF-400 INVERTER DRIVES

Standard Driver - 331X440AAG01

OPERATION - TROUBLE SHOOTING - REPAIR

GEK-62515

DRIVER ASSEMBLY	ELEM	36D868888AA
	CONN	36B590234AA

PRINTED CIRCUIT CARD DIAGRAMS

PHASE LOGIC	36D868807AA
INVERTER	36D868810AA
CONVERTER	36D868812AA
REGULATOR	36D868816AA
SYSTEM	36D868818AA
POWER SUPPLY	36C764164AA
	36D868820AA
METER	36D868822AA
CURRENT FEEDBACK	36C764166AA
PULSE TRANSFORMER	36C764172AA

GENERAL ELECTRIC

GENERAL ELECTRIC 36D868888AA

UNLESS OTHERWISE SPECIFIED USE THE FOLLOWING —
APPLIED PRACTICES: SURFACES ✓

ø123

TITLE ELEMENTARY DIAGRAM
DRIVER
FIRST MADE FOR AF-400

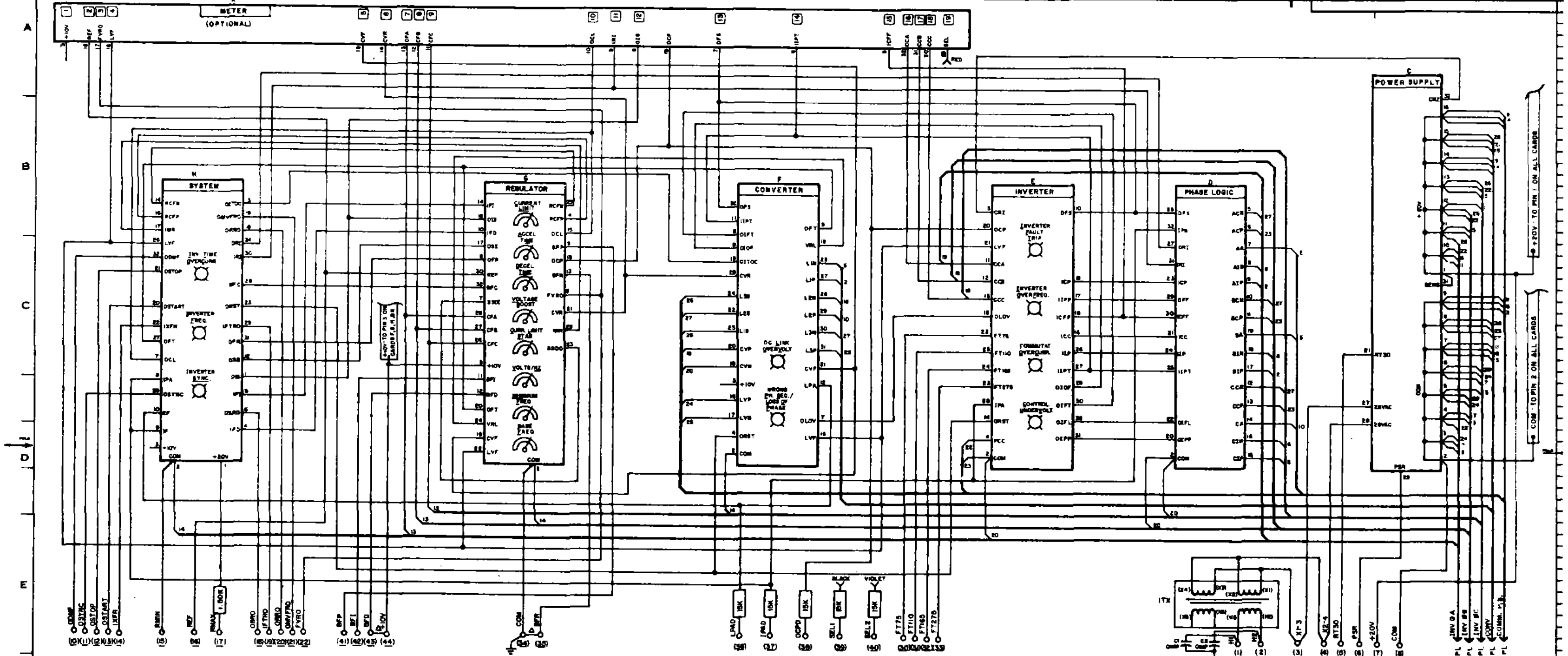

DRIVER SYMBOLS

F	THE LETTERS ABOVE THE CARD BLOCKS REFER TO THE LOCATION OF THE CARD IN THE DRIVER RACK
⊠	CARD MOUNTED INDICATING LIGHT
	CARD MOUNTED ADJUSTMENT POTENTIOMETER
5	NUMBERS IN SQUARES IN METER CARD BLOCK REFER TO SELECTOR SWITCH POSITIONS FOR READING ADJACENT SIGNAL INPUTS
	CONTROL POWER BUS BAR FOR CARD BACK PLANE INTERCONNECTION
T	THE HEAVY LINE REPRESENTS THE WIRE BUNDLES LEADING TO THE CONNECTOR PLUG DENOTED BY THE ARROW AND LOCATED AT THE BOTTOM OF THE CARD RACK. THE CONNECTOR PLUG PIN NUMBER IS SHOWN WHERE EACH WIRE LEAVES THE WIRE BUNDLE.
	THE NUMBER SHOWN ABOVE EACH WIRE, AS IT LEAVES THE CARD BLOCK, IS THE CARD TAB NUMBER AND ALSO THE CARD RECEPTACLE NUMBER.
	INDICATES TERMINAL BOARD JUMPER
(28)	INDICATES TERMINATION OF WIRE AT TERMINAL BOARDS LOCATED AT BOTTOM OF CARD RACK.
(28)	INDICATES RESISTOR IN WIRE LEADING FROM CARD RECEPTACLE TO TERMINAL BOARD

DRIVER NOMENCLATURE

THE ABBREVIATED NOMENCLATURE USED ON THE DRIVER IS LISTED BELOW. A "I" OR "O" PRECEDING THE ABBREVIATION INDICATES RESPECTIVELY THE HIGH (+20 VOLTS) OR LOW (O VOLTS) LOGIC STATE WHICH PRODUCES OR INDICATES THE SPECIFIED OPERATION OR SIGNAL.

(A,B) CA	- PHASE (A,B) C AUXILIARY FIRING SIGNAL
(A,B) CCN	- PHASE (A,B) C COMMUTATION FIRING SIGNAL - NEG. BUS
(A,B) CCP	- PHASE (A,B) C COMMUTATION FIRING SIGNAL - POS. BUS
(A,B) CIN	- PHASE (A,B) C INVERTER FIRING SIGNAL - NEG. BUS
(A,B) CIP	- PHASE (A,B) C INVERTER FIRING SIGNAL - POS. BUS
BFD(I)	- BASE FREQUENCY DECREASE (INCREASE) SIGNAL INPUT
BFP	- BASE FREQUENCY EXTERNAL POTENTIOMETER SUPPLY
CCA (B,C)	- COMMUTATION CURRENT SIGNAL - PHASE A (B,C)
ICC	- COMMUTATION CURRENT LOGIC SIGNAL
CFA (B,C)	- MOTOR CURRENT FEEDBACK SIGNAL - PHASE A (B,C)
ICFF	- COMMUTATION FLIP - FLOP TRIGGER
OCL	- CURRENT LIMIT LOGIC SIGNAL
BFR	- BASE FREQUENCY RANGE SELECTION
COC	- COMMUTATION OVERCURRENT TRIP SIGNAL
(O) ICP	- COMMUTATION PULSE
OCPD	- COMMUTATION PULSE DIAGNOSTIC TRIGGER
CRZ	- CONTROL REFERENCE ZENER VOLTAGE
CUV	- CONTROL UNDERVOLTAGE TRIP SIGNAL
CVF	- CONVERTER VOLTAGE FEEDBACK
CVN(P)	- CONVERTER OUTPUT VOLTAGE - NEG. (POS.) BUS
CVR	- CONVERTER VOLTAGE REFERENCE
DFS	- DELAYED FIRING SIGNAL SUPPLY
DDMF	- DECELERATE TO MINIMUM FREQUENCY SIGNAL
EF	- EXTERNAL FREQUENCY SIGNAL
FCC	- FILTER CAPACITOR CURRENT SIGNAL
IFD (I)	- FREQUENCY DECREASE (INCREASE) - SYNCHRONIZED
OFR	- FAST ACCELERATION - DECELERATION RATE SIGNAL
FT75(110,165,275)	-OVERFREQUENCY TRIP SELECTION - 75 HZ (110,165,275)
OFT	- FAULT TRIP SIGNAL
IFTRO	- FAULT TRIP READOUT SIGNAL
FVRO	-FREQUENCY VOLTAGE READOUT SIGNAL
IF	- INVERTER FREQUENCY SIGNAL
1IFF	- INVERTER FLIP-FLOP TRIGGER
OIFL	- INVERTER FAULT FIRING LOCKOUT
OIFP	- INVERTER FAULT FIRING PULSE
(O) IFT	- INVERTER FAULT TRIP SIGNAL
(O) IOF	- INVERTER OVERFREQUENCY TRIP SIGNAL
IPA	- INVERTER PHASE A LOGIC SIGNAL
IPAD	- INVERTER PHASE A DIAGNOSTIC SIGNAL
IIP	- INITIAL FIRING PULSE
IIPT	- INVERTER FIRING PULSE TRAIN
OIS	- INVERTER SYNCHRONIZING LOGIC SIGNAL
L1(2,3)N	- PHASE 1 (2,3) CONVERTER FIRING SIGNAL (NEG. BUS)
L1(2,3)P	- PHASE 1 (2,3) CONVERTER FIRING SIGNAL (POS. BUS)
(O) LOV	- DC LINK OVERVOLTAGE TRIP SIGNAL
LPA	- A.C. LINE PHASE A LOGIC SIGNAL
LPAD	- A.C. LINE PHASE A DIAGNOSTIC SIGNAL
L1(2,3)S	- A.C. LINE PHASE 1(2,3) SYNCHRONIZING SIGNAL
LVF	- D.C. LINK VOLTAGE FEEDBACK
LVN(P)	- D.C. LINK VOLTAGE - NEG. (POS.) BUS
1MR	- MINIMUM REFERENCE SIGNAL
OMVFRO	- MINIMUM VOLTAGE AND FREQUENCY READOUT
PS/LOP	- WRONG PHASE SEQUENCE/LOSS OF PHASE TRIP SIGNAL
PSR	- POWER SUPPLY REGULATION SIGNAL
REF	- REFERENCE INPUT SIGNAL
RFC	- REFERENCE INPUT CLAMP
(O) IRI	- RUN INVERTER LOGIC SIGNAL
RMAX	- REFERENCE POTENTIOMETER CONNECTION - MAXIMUM
RMIN	- REFERENCE POTENTIOMETER CONNECTION - MINIMUM
OIRRO	- INVERTER RUNNING READOUT SIGNAL
ORST	- FAULT RESET SIGNAL
RT30	- CONTROL POWER RIDE - THROUGH +30 VOLT INPUT
SEL(1,2)	- SIGNAL SELECTOR FOR DIAGNOSTIC
SENS	- POWER SUPPLY VOLTAGE SENSING
OSS	- START SYNCHRONIZING INVERTER LOGIC SIGNAL
OSRO	- INVERTER SYNCHRONIZED READOUT SIGNAL
SSDI(O)	- INVERTER STABILITY/SLOWDOWN INPUT (OUTPUT) SIGNAL)
DSTART	- DRIVE START INPUT SIGNAL
DSTOP	- DRIVE STOP INPUT SIGNAL
DSYNC	- SYNCHRONIZE INVERTER INPUT SIGNAL
SYNC	- INVERTER SYNCHRONIZED SIGNAL
VRL	- CONVERTER VOLTAGE REFERENCE LIMIT SIGNAL
IXFR	- EXTERNAL FAULT RESET INPUT SIGNAL
+20V	- +20 VOLT REGULATED POWER SUPPLY
+10V	- +10 VOLT REGULATED POWER SUPPLY
COM	- COMMON
(O) ITOC	- INVERSE TIME OVERCURRENT TRIP SIGNAL
RCFN(P)	- RECTIFIED MOTOR CURRENT FEEDBACK - NEG. (POS.)

NOTE: SEE DRIVER NOTES ON SH. 2 THRU SH. 8 FOR DETAILED INFORMATION

REVISIONS

1	[illegible]	[illegible]	[illegible]	[illegible]
2	[illegible]	[illegible]	[illegible]	
3	[illegible]	[illegible]	[illegible]	

Mar. 3, 1977
SPEED VARIATOR
ERIE, PA
36D868888AA
CONT ON SHEET 2

GENERAL ELECTRIC

36D868888AA
CONT ON SHEET 3 SH NO. 2

REV NO. 0
CONT ON SHEET SH NO.

TITLE ELEMENTARY DIAGRAM
DRIVER NOTES

FIRST MADE FOR AF-400

IN THESE NOTES, A "HIGH" LOGIC STATE REFERS TO +18 TO +20 VOLTS AND A "LOW" LOGIC STATE REFERS TO 0 TO +1 VOLT.

A. <u>DRIVER INPUTS</u>

1. <u>ODMF</u> - IF TB10 IS TAKEN LOW WHEN THE INVERTER IS RUNNING, THE INVERTER WILL DECELERATE TO ITS MINIMUM FREQUENCY AT A FAST RATE, AND WILL REMAIN THERE AS LONG AS THE ODMF INPUT IS IN THE LOW STATE. WHEN ODMF GOES HIGH, THE INVERTER WILL RETURN TO THE REFERENCE LEVEL FREQUENCY AT A NORMAL ACCELERATION RATE.

2. <u>OSYNC</u> - IF TB11 IS TAKEN LOW WHEN THE INVERTER IS RUNNING, THE INVERTER WILL ACCELERATE AT A FAST RATE TO THE A.C. SUPPLY LINE FREQUENCY, AND SYNCHRONIZE TO THAT FREQUENCY. THE INVERTER WILL REMAIN SYNCHRONIZED TO THE LINE FREQUENCY AS LONG AS THE OSYNC INPUT REMAINS IN THE LOW STATE, AND WILL RETURN TO THE REFERENCE LEVEL FREQUENCY AT A NORMAL RATE WHEN OSYNC GOES HIGH.

3. <u>OSTOP</u> - IF TB12 IS TAKEN LOW WHEN THE INVERTER IS RUNNING, THE INVERTER WILL DECELERATE TO ITS MINIMUM FREQUENCY AT A NORMAL RATE AND THEN STOP OPERATING. THE INVERTER WILL REMAIN OFF AS LONG AS THE OSTOP INPUT IS LOW IRRESPECTIVE OF ANY OTHER INPUT SIGNALS. THE ABOVE STOPPING PROCEDURE WILL ALSO OCCUR WHEN OSTOP MOMENTARILY GOES LOW IF THE OSTART INPUT IS IN THE HIGH STATE.

4. <u>OSTART</u> - IF TB13 IS MOMENTARILY TAKEN LOW WHEN THE INVERTER IS OFF AND THE OSTOP (TB12) INPUT IS IN THE HIGH STATE, THE INVERTER WILL START OPERATING AT ITS MINIMUM FREQUENCY, AND WILL ACCELERATE AT A NORMAL RATE TO THE REFERENCE LEVEL FREQUENCY.

5. <u>IXFR</u> - IF TB14 IS HELD LOW, A FAULT SHUTDOWN CANNOT BE RESET UNTIL THE EXTERNAL FAULT RESET (TB14) INPUT IS MOMENTARILY TAKEN HIGH. WHEN TB14 IS TAKEN HIGH, OR IS LEFT UNCONNECTED, A FAULT SHUTDOWN WILL BE RESET WHEN THE OSTOP INPUT IS LOW AND THE LOGIC SIGNALS ORI AND 1MR ARE IN THEIR HIGH STATES.

6. <u>REF</u>, <u>RMIN</u>, <u>RMAX</u> - THE REFERENCE VOLTAGE LEVEL AT TB16 DETERMINES THE INVERTER FREQUENCY AND VOLTAGE WHEN THE INVERTER IS OPERATING NORMALLY (ODMF AND OSYNC INPUTS BOTH HIGH). IF A REFERENCE POTENTIOMETER IS USED, IT SHOULD BE 5000 OHMS IN VALUE AND HAVE ITS MINIMUM END CONNECTED TO RMIN (TB15) AT ZERO VOLTS, AND ITS MAXIMUM END CONNECTED TO RMAX (TB17), AS SHOWN IN THE SKETCH BELOW, SO THAT THE MAXIMUM REFERENCE VOLTAGE IS +15 VOLTS. IF SOME OTHER OHMIC VALUE POTENTIOMETER IS USED, ITS MAXIMUM END SHOULD BE CONNECTED IN SERIES WITH A SUITABLE VALUE RESISTOR TO +20V (TB7) SO THAT THE MAXIMUM REFERENCE VOLTAGE IS +15 VOLTS. IF SOME OTHER VOLTAGE SOURCE IS USED AS A REFERENCE, IT SHOULD BE CONNECTED BEWEEN TB16 AND TB15 (TB16 POSITIVE) AND SHOULD BE 15 VOLTS FOR MAXIMUM REFERENCE.

No revisions are to be made to this drawing without the specific approval of the Development Engineering Section of the Speed Variator Department.

REVISIONS
JA (CD)
5TS(50)
5QC(BK)5
5QC(B)
5D(BK)
5B(3)23
5(S)
PRINTS TO

MADE BY S. J. Holsapple MAR. 2, 1977
ISSUED S. J. Holsapple MAR. 3, 1977
APPROVALS

SPEED VARIATOR DIV OR DEPT.
ERIE, PA. LOCATION

36D868888AA
CONT ON SHEET 3 SH NO. 2
CODE IDENT NO.

FF-803 WF (4-76)
PRINTED IN U.S.A.

GENERAL ELECTRIC

36D868888AA
CONT ON SHEET 4 SH NO. 3

REV NO. 0
CONT ON SHEET SH NO.

TITLE ELEMENTARY DIAGRAM
DRIVER NOTES
FIRST MADE FOR AF-400

REVISIONS
1 MARCH 23, 1977 PER W.J. Kronenberger GV-872 #11C
REVISED WITH GENERAL CHGS. RECORD COPY FILED

6. (CONT.)

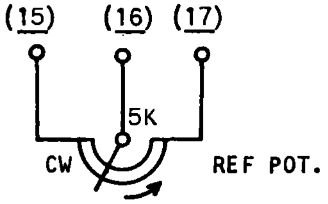

7. BFP, BFI, BFD - IF AN EXTERNAL BASE FREQUENCY ADJUSTING POTENTIOMETER IS USED, IT SHOULD BE 5000 OHMS IN VALUE AND SHOULD BE CONNECTED FROM BFP (TB41) TO +10V (TB44) AS SHOWN IN THE SKETCH BELOW. ITS WIPER ARM SHOULD BE CONNECTED EITHER TO BFI (TB42) TO INCREASE THE THE BASE FREQUENCY OR TO BFD (TB43) TO DECREASE THE BASE FREQUENCY. THIS WILL PROVIDE EXTERNAL ADJUSTMENT OF THE BASE FREQUENCY BY AS MUCH AS 50% ABOVE OR BELOW THE INTERNALLY SET BASE FREQUENCY, WITHIN THE MAXIMUM FREQUENCY RATING OF THE DRIVE. THE JUMPER BETWEEN TB43 AND TB44 SHOULD BE REMOVED ONLY IF THE EXTERNAL POTENTIOMETER WIPER IS CONNECTED TO TB43.

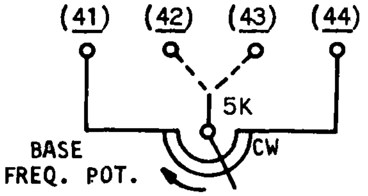

B. DRIVER LINE SYNCH AND VOLTAGE FEEDBACKS

1. L1S, L2S, L3S - TO PROVIDE FOR PHASE CONTROL LINE SYNCHRONIZATION OF THE CONVERTER; DRIVER PLUG EPL IS CONNECTED TO L1, L2 AND L3 PHASES RESPECTIVELY OF THE A.C. SUPPLY THROUGH SUITABLE SERIES RESISTORS. THESE RESISTORS ARE PLACED IN THE CONNECTING WIRE HARNESS AND ARE 1.5 MEGOHMS FOR A 230 VOLT SUPPLY AND 3.0 MEGOHMS FOR A 460 VOLT SUPPLY.

2. CVP, CVN - TO PROVIDE CONVERTER VOLTAGE FEEDBACK, DRIVER PLUG EPL IS CONNECTED TO THE CONVERTER MODULE OUTPUT, WITH CVP POSITIVE, THROUGH SUITABLE SERIES RESISTORS. THESE RESISTORS ARE PLACED IN THE CONNECTING WIRE HARNESS AND ARE 1.5 MEGOHMS FOR A 230 VOLT CONVERTER AND 3.0 MEGOHMS FOR A 460 VOLT CONVERTER.

3. LVP, LVN - TO PROVIDE D.C. LINK VOLTAGE FEEDBACK, DRIVER PLUG EPL IS CONNECTED TO THE INVERTER D.C. LINK, WITH LVP POSITIVE, THROUGH SUITABLE SERIES RESISTORS. THESE RESISTORS ARE PLACED IN THE

No revisions are to be made to this drawing without the specific approval of the Development Engineering Section of the Speed Variator Department.

JA(CD)
5TS(50)
5QC(BK)5
5QC(B)
5D(BK)
58(3)23
5(S)
PRINTS TO

MADE BY S.J. Holaszpole MAR. 2, 1977
ISSUED S.J. Holaszpole MAR. 3, 1977
APPROVALS EHS
SPEED VARIATOR DIV OR DEPT.
ERIE, PA. LOCATION
36D868888AA
CONT ON SHEET 4 SH NO. 3
CODE IDENT NO.

GENERAL ELECTRIC

36D868888AA
CONT ON SHEET 5 SH NO. 4

REV NO. 01
CONT ON SHEET SH NO.

TITLE ELEMENTARY DIAGRAM
DRIVER NOTES

FIRST MADE FOR AF-400

REVISION

D | JULY 13,1977 M.Cotty | SV-872 #11E | DELETED PART of NOTE 1+2 ER

CONNECTING WIRE HARNESS AND ARE 1.5 MEGOHMS FOR A 300 VOLT D.C. LINK AND 3.0 MEGOHMS FOR A 600 VOLT D.C. LINK.

C. DRIVER JUMPER SELECTIONS

1. BFR - TB35 IS THE MEANS TO CHANGE THE INVERTER BASE FREQUENCY RANGE AS FOLLOWS:
   37.5 TO 75 HZ - JUMPER TB35 TO TB34 (COM)
   75 TO 150 HZ - LEAVE TB35 OPEN.

   BASE FREQUENCY IS THE FREQUENCY AT WHICH THE INVERTER REACHES FULL VOLTAGE AND IS ADJUSTED BY THE BASE FREQ. POTENTIOMETER WITHIN EITHER OF THE ABOVE TWO RANGES. ALTHOUGH THIS DIAGRAM SHOWS BFR JUMPERED TO COM., CONSULT THE DRIVE ELEMENTARY DIAGRAM TO DETERMINE IF THIS JUMPER SHOULD BE CONNECTED OR NOT.
   CAUTION: IMPROPER JUMPER CONNECTION MAY RESULT IN DRIVE MALFUNCTION OR DAMAGE.

2. FT75, FT110, FT165, FT275 - TB30, TB31, TB32 AND TB33 ARE THE MEANS TO SELECT AN UPPER FREQUENCY LIMIT AT WHICH THE DRIVE WILL TRIP AND SHUT DOWN, TO PREVENT MOTOR OVERSPEED. THE FREQUENCY TRIP LEVELS ARE SELECTED BY JUMPERS AS FOLLOWS:
   75 HZ TRIP - NO JUMPER
   110 HZ TRIP - JUMPER TB30 TO TB31
   165 HZ TRIP - JUMPER TB30 TO TB32
   275 HZ TRIP - JUMPER TB30 TO TB33

   CONSULT THE DRIVE ELEMENTARY DIAGRAM FOR THE PROPER JUMPER PLACEMENT.
   WARNING: IMPROPER JUMPER PLACEMENT MAY RESULT IN DRIVE MALFUNCTION OR PRESENT AN EQUIPMENT OR PERSONNEL HAZARD DUE TO MOTOR OVERSPEED.

No revisions are to be made to this drawing without the specific approval of the Development Engineering Section of the Speed Variator Department.

D. CARD JUMPER SELECTIONS

1. 460V JUMPER ON INVERTER CARD (193X376AA G01) - THIS JUMPER SHOULD BE PRESENT ON ALL 460 VOLT OUTPUT INVERTER DRIVES FOR PROPER OPERATION. THIS JUMPER SHOULD BE REMOVED ON ALL 230 VOLT OUTPUT INVERTER DRIVES FOR PROPER OPERATION.
   CAUTION: INCORRECT JUMPER CONNECTION WILL RESULT IN MALFUNCTION AND POSSIBLE DAMAGE TO THE INVERTER.

2. 60 HZ JUMPER ON CONVERTER CARD (193X377AA G01) - THIS JUMPER SHOULD BE PRESENT ON ALL DRIVES SUPPLIED FROM 60HZ A.C. POWER FOR PROPER SYNCHRONIZING OF THE INVERTER TO THE A.C. SUPPLY (WHEN THIS IS DONE). FOR DRIVES SUPPLIED FROM 50 HZ A.C. POWER, THIS JUMPER SHOULD BE REMOVED.

JA(CD)
5TS(50)
5QC(8K)5
5QC(8)
5D(8K)
5B(3)23
5(S)
PRINTS TO

MADE BY S.J. Volazyk MAR.2,1977
ISSUED S.J. Volazyk MAR.3,1977
APPROVALS ER FAS
SPEED VARIATOR DIV OR DEPT.
ERIE, PA. LOCATION
36D868888AA
CONT ON SHEET 5 SH NO. 4
CODE IDENT NO.

GENERAL ELECTRIC

36D868888AA
CONT ON SHEET 6 SH NO. 5

REV NO. Ø1

TITLE ELEMENTARY DIAGRAM
DRIVER NOTES

CONT ON SHEET SH NO.

FIRST MADE FOR AF-400

REVISIONS
SV-872 #11E
JULY 13, 1977 M.C...
B DELETED PART OF NOTE 5 CEK

E. ADJUSTMENTS

ALL DRIVER ADJUSTMENTS ARE MADE BY POTENTIOMETERS LOCATED ON THE REGULATOR CARD (193X378AA G01).

1. CLIM - THE CURRENT LIMIT POTENTIOMETER ADJUSTS THE CURRENT LIMIT BETWEEN 50% AND 150% OF RATED DRIVE OUTPUT CURRENT. IT OPERATES BY REDUCING INVERTER FREQUENCY AND VOLTAGE IF THE SET CURRENT LIMIT IS EXCEEDED.

2. ATIM, DTIM - THE ACCELERATION TIME AND DECELERATION TIME POTENTIOMETERS INDEPENDENTLY ADJUST THE DRIVE ACCELERATION AND DECELERATION RATES RESPECTIVELY. FOR A 15 VOLT STEP CHANGE IN DRIVER REFERENCE, THE DRIVE WILL ACCELERATE OR DECELERATE BETWEEN ZERO AND RATED OUTPUT ON LINEAR RAMPS WHICH ARE ADJUSTABLE FROM 2.5 TO 25 SECONDS EACH.

3. VB - THE VOLTAGE BOOST POTENTIOMETER ADJUSTS THE FIXED AMOUNT OF VOLTAGE WHICH IS ADDED TO THE INVERTER IRRESPECTIVE OF FREQUENCY. THE AMOUNT OF VOLTAGE BOOST CAN BE ADJUSTED FROM ZERO TO APPROXIMATELY 7% OF RATED VOLTAGE. BELOW THE MINIMUM REFERENCE LEVEL, THE VOLTAGE BOOST IS SWITCHED OFF.

4. CLST - THE CURRENT LIMIT STABILITY POTENTIOMETER IS ADJUSTED, DEPENDING ON THE AMOUNT OF DRIVE INERTIA, TO STABILIZE THE CURRENT LIMIT FUNCTION. IT CONTROLS THE RATE AT WHICH THE CURRENT LIMIT CAN REDUCE THE MOTOR SPEED ON OVERLOAD.

5. V/HZ - THE VOLTS/HERTZ POTENTIOMETER PROVIDES A VERNIER ADJUSTMENT OF THE VOLTS PER HZ OF THE INVERTER WITHIN +15%, -5% OF NOMINAL.

6. MINF - THE MINIMUM FREQUENCY POTENTIOMETER ADJUSTS THE INVERTER MINIMUM FREQUENCY FROM 3% TO 12% OF SET BASE FREQUENCY. FOR REFERENCE LEVELS BELOW THE MINIMUM FREQUENCY LEVEL, ONLY THE INVERTER VOLTAGE IS DECREASED.

7. BF - THE BASE FREQUENCY POTENTIOMETER ADJUSTS THE INVERTER BASE FREQUENCY OVER A MINIMUM 2 TO 1 RANGE WITHIN EITHER OF THE TWO BASE FREQUENCY RANGES, 37.5 TO 75 HZ OR 75 TO 150 HZ, SELECTED BY THE BFR JUMPER (SEE NOTE C1).

   AN EXTERNAL BASE FREQUENCY ADJUSTMENT MAY BE ADDED TO MODIFY THE INTERNAL SETTING BY AS MUCH AS PLUS OR MINUS 50%, AS EXPLAINED IN NOTE A7.

No revisions are to be made to this drawing without the specific approval of the Development Engineering Section of the Speed Variator Department.

JA(CD)
5TS(50)
5QC(BK)5
5QC(8)
5D(8K)
58(3)23
5(S)
PRINTS TO

MADE BY S.G. Holsapple MAR. 2, 1977
ISSUED S.G. Holsapple MAR. 3, 1977
APPROVALS CEK
EAS
SPEED VARIATOR DIV OR DEPT.
ERIE, PA. LOCATION
36D868888AA
CONT ON SHEET 6 SH NO. 5
CODE IDENT NO.

GENERAL ELECTRIC

36D868888AA
CONT ON SHEET 7 SH NO. 6

REV NO. 01
CONT ON SHEET SH NO.

TITLE ELEMENTARY DIAGRAM
DRIVER NOTES

FIRST MADE FOR AF-400

REVISIONS
SV-872 #11E
JULY 13, 1977 M. Cotts
CHANGED NOTE 8
1

8. VLIM (INITIAL SET-UP ADJUST) - THE VOLTAGE LIMIT POTENTIOMETER IS USED TO PREVENT SATURATION OF THE CONVERTER BY LIMITING THE REFERENCE TO THE VOLTAGE REGULATOR. IT IS ADJUSTED TO LIMIT THE MAXIMUM INVERTER A.C. OUTPUT VOLTAGE TO BE SLIGHTLY LESS THAN THE A.C. SUPPLY VOLTAGE.

CAUTION: MISADJUSTMENT OF THIS POTENTIOMETER CAN CAUSE EXCESSIVE CURRENTS DURING MOTOR TRANSFER BETWEEN LINE AND INVERTER.

F. INDICATING LIGHTS

1. ITOC (ON SYSTEM CARD) - THE INVERSE TIME OVERCURRENT TRIP LIGHT INDICATES AN INVERTER OVERCURRENT SHUTDOWN. THE DURATION OF THE OVERCURRENT CONDITION BEFORE TRIPPING IS FROM 1 MILLISECOND AT OVER 200% OF RATED CURRENT TO 1 MINUTE AT THE SET CURRENT LIMIT LEVEL.

2. IF (ON SYSTEM CARD) - THE INVERTER FREQUENCY LIGHT INDICATES THE OPERATING FREQUENCY OF THE INVERTER PHASE A CONTROL WHETHER THE INVERTER IS ACTUALLY RUNNING OR NOT. IT IS USEFUL IN DETERMINING THE MINIMUM FREQUENCY AT STANDBY.

3. SYNC (ON SYSTEM CARD) - THE INVERTER SYNCHRONIZED LIGHT INDICATES WHEN THE INVERTER IS FREQUENCY AND PHASE SYCHRONIZED TO THE A.C. LINE.

4. LOV (ON CONVERTER CARD) - THE D.C. LINK OVERVOLTAGE TRIP LIGHT INDICATES AN OVERVOLTAGE SHUTDOWN DUE TO REGENERATIVE "PUMP UP" OF THE D.C. LINK VOLTAGE.

5. PS/LOP (ON COVERTER CARD) - THE WRONG PHASE SEQUENCY/LOSS OF PHASE LIGHT WILL INDICATE AN INCORRECT PHASE SEQUENCE OF THE A.C. SUPPLY LINE CONNECTION, OR A LOSS OF ONE OR MORE OF THE A.C. SUPPLY LINE VOLTAGES.

6. IFT (ON INVERTER CARD) - THE INVERTER FAULT TRIP LIGHT INDICATES AN INVERTER "SHOOT-THROUGH" FAULT SHUTDOWN DUE TO INVERTER MISOPERATION IF IT IS THE ONLY LIGHT INDICATION. HOWEVER, OPERATION OF THE LOV, COC AND CUV TRIP CIRCUITS WILL PRODUCE A "SHOOT-THROUGH" SHUTDOWN, SO THE IFT LIGHT WILL ALSO INDICATE WHENEVER EITHER THE LOV, COC OR CUV LIGHTS INDICATE.

JA(CD)
5TS(50)
5QC(BK)5
5QC(B)
5D(BK)
5B(3)23
5(S)
PRINTS TO

MADE BY S.Q. Holzapple	MAR. 2, 1977	APPROVALS	SPEED VARIATOR — DIV OR DEPT
ISSUED S.Q. Holzapple	MAR. 3, 1977	EAS	ERIE, PA. — LOCATION

36D868888AA
CONT ON SHEET 7 SH NO. 6
CODE IDENT NO

FF-803 WF (4-76)

GENERAL ELECTRIC

36D868888AA
CONT ON SHEET 8 SH NO. 7

REV NO. 0
CONT ON SHEET SH NO.

TITLE ELEMENTARY DIAGRAM
DRIVER NOTES

FIRST MADE FOR AF-400

REVISIONS

7. IOF (ON INVERTER CARD) - THE INVERTER OVERFREQUENCY TRIP LIGHT INDICATES AN OVERFREQUENCY SHUTDOWN AS DETERMINED BY THE SELECTION OF THE FREQUENCY TRIP LEVEL JUMPERS, AS EXPLAINED IN NOTE C2.

8. COC (ON INVERTER CARD) - THE COMMUTATION OVERCURRENT TRIP LIGHT INDICATES AN OVERCURRENT SHUTDOWN DUE TO AN OVERVOLTAGE IN ANY ONE OF THE THREE INVERTER COMMUTATION CIRCUITS. THIS SHUTDOWN NORMALLY OCCURS FROM EXCESSIVE MOTOR CURRENT PEAKS AT OR NEAR BASE FREQUENCY, BUT CAN BE DUE TO COMMUTATION CIRCUIT MISOPERATION AT LOWER FREQUENCIES AND VOLTAGES.

9. CUV (ON INVERTER CARD) - THE CONTROL UNDERVOLTAGE TRIP LIGHT INDICATES A SHUTDOWN DUE TO LOW CONTROL VOLTAGE OR LOW FIRING SIGNAL VOLTAGE.

G. DRIVER READOUTS

THESE SIGNAL READOUTS, EXCEPT FOR FVRO, ARE DESIGNED TO DRIVE CARD MOUNTED RELAYS CONNECTED FROM +20V TO THE READOUT TERMINAL. THEY ARE EACH CAPABLE OF "SINKING" 15 MA IN THEIR LOW STATES.

1. OSRO - IF TB18 GOES LOW, IT SIGNALS THAT THE INVERTER IS FREQUENCY AND PHASE SYNCHRONIZED TO THE A.C. LINE.

2. 1FTRO - IF TB19 GOES HIGH, IT SIGNALS A FAULT TRIP SHUTDOWN OF THE DRIVE. THE CAUSE OF THE SHUTDOWN SHOULD BE SHOWN BY THE CARD INDICATING LIGHTS ASEXPLAINED IN NOTES F1 THROUGH F9.

3. ORRO - IF TB20 IS LOW, IT SIGNALS THAT THE INVERTER IS RUNNING. IF TB20 IS HIGH, IT SIGNALS THAT THE INVERTER IS STOPPED.

4. OMVFRO - IF TB21 IS LOW, IT SIGNALS THAT THE INVERTER IS AT ITS MINIMUM VOLTAGE AND FREQUENCY. IF TB21 IS HIGH IT SIGNALS THAT THE INVERTER IS ABOVE ITS MINIMUM VOLTAGE AND FREQUENCY.

5. FVRO - TB22 PROVIDES AN ANALOG VOLTAGE SIGNAL EQUIVALENT TO THE INVERTER FREQUENCY WITHIN ±1% OF MAXIMUM. THE INVERTER FREQUENCY WILL BE 5 TIMES THE TB22 VOLTAGE WHEN TB35 IS JUMPERED TO TB34 (SEE NOTE C1), AND WILL BE 10 TIMES THE TB22 VOLTAGE WHEN TB35 IS LEFT OPEN.

H. DIAGNOSTICS

TB36 THROUGH TB40 ARE PROVIDED FOR DIAGNOSTIC CHECKOUT OF THE DRIVE USING A GOOD QUALITY OSCILLOSCOPE HAVING APPROXIMATELY A 1 MEGOHM INPUT RESISTANCE. THESE FIVE DIAGNOSTIC TERMINALS ARE CONNECTED TO THEIR CARD SIGNALS THROUGH 15K RESISTORS TO PREVENT CONTROL MISOPERATION FROM NOISE OR OTHER SIGNALS INTRODUCED AT THESE TERMINALS. HOWEVER, EXTREME CARE SHOULD STILL BE EXERCISED WHEN USING SEL1 AND SEL2 DIAGNOSTIC TERMINALS.

JA(CD)
5TS(50)
5QC(BK)5
5QC(B)
5D(BK)
5B(3)23
5(S)
PRINTS TO

No revisions are to be made to this drawing without the specific approval of the Development Engineering Section of the Speed Variator Department.

MADE BY MAR. 2, 1977
ISSUED MAR. 3, 1977
APPROVALS
SPEED VARIATOR DIV OR DEPT.
ERIE, PA. LOCATION
36D868888AA
CONT ON SHEET 8 SH NO. 7
CODE IDENT

FF-803 WF (4-76)

GENERAL ELECTRIC

36D868888AA

CONT ON SHEET FL SH NO. 8

REV NO. 01

CONT ON SHEET SH NO.

TITLE ELEMENTARY DIAGRAM
DRIVER NOTES

FIRST MADE FOR AF-400

REVISIO

RECORD CHG

NOTE WAS X1,3 X3-4

H. DIAGNOSTICS (CONT'D)

CAUTION: CONSULT INSTRUCTION BOOK FOR PROPER PROCEDURE IN USING SEL1 AND SEL2 FOR DIAGNOSTIC CHECKOUT SINCE DRIVE MISOPERATION AND POSSIBLE DAMAGE MAY RESULT FROM INCORRECT PROCEDURE.

1. LPAD - TB36 PROVIDES A SQUARE WAVE FREQUENCY SIGNAL WHICH IS IN PHASE WITH PHASE A (OR PHASE 1) OF THE A.C. SUPPLY LINE.
2. IPAD - TB37 PROVIDES A SQUARE WAVE FREQUENCY SIGNAL WHICH IS IN PHASE WITH PHASE A OF THE INVERTER.
3. OCPD - TB38 PROVIDES A LOW GOING COMMUTATION PULSE FREQUENCY WHICH IS 6 TIMES THE INVERTER FUNDAMENTAL FREQUENCY, AND IS USEFUL AS AN OSCILLOSCOPE TRIGGER SIGNAL.
4. SEL1, SEL2 - TB39 AND TB40 ARE CONNECTED TO TWO SELECTOR PROBES WHICH CAN BE USED TO READ ANY CARD OUTPUT TERMINAL ON THE DRIVER BACK PLANE, BY MEANS OF AN OSCILLOSCOPE.
5. METER CARD - AN OPTIONAL METER CARD (193X381AA G01) CAN BE USED IN PLACE OF OR IN CONJUNCTION WITH AN OSCILLOSCOPE FOR DIAGNOSTIC CHECKOUT. CONSULT THE INSTRUCTION BOOK FOR DIAGNOSTIC PROCEDURES.

J. POWER SUPPLY INPUTS/OUTPUTS

1. H1, H2 - TB1 AND TB2 ARE FOR THE 115 VOLT A.C. SUPPLY TO THE DRIVER CONTROL POWER TRANSFORMER.
2. X1-3 ,X2-4 - TB3 AND TB4 ARE FOR THE 28 VOLT A.C. OUTPUT OF THE TRANSFORMER INTO THE POWER SUPPLY CARD.
3. RT30 - TB5 MAY BE CONNECTED TO A D. C. BATTERY SOURCE OF 27 TO 31 VOLTS FOR CONTROL RIDE THROUGH OF AN A.C. POWER OUTAGE.
4. PSR - TB6 MAY BE USED AS THE POWER SUPPLY REGULATING SIGNAL TO A SLAVED POWER SUPPLY.
5. +20V, COM - TB7 AND TB8 ARE THE +20 VOLT AND COMMON OUTPUTS OF THE 2.5 AMP MAXIMUM RATED POWER SUPPLY CARD.

No revisions are to be made to this drawing without the specific approval of the Development Engineering Section of the Speed Variator Department.

JA(CD)
5TS(50)
5QC(BK)
5QC(B)
5D(BK)
5B(3)23
5(S)
PRINTS TO

MADE BY MAR. 2, 1977
ISSUED MAR. 3, 1977

APPROVALS

SPEED VARIATOR DIV OR DEPT.
ERIE, PA. LOCATION

36D868888AA

CONT ON SHEET FL SH NO. 8

36B590234AA
CONT. ON SH. 2
SH. NO. 1
REV. NO. 0

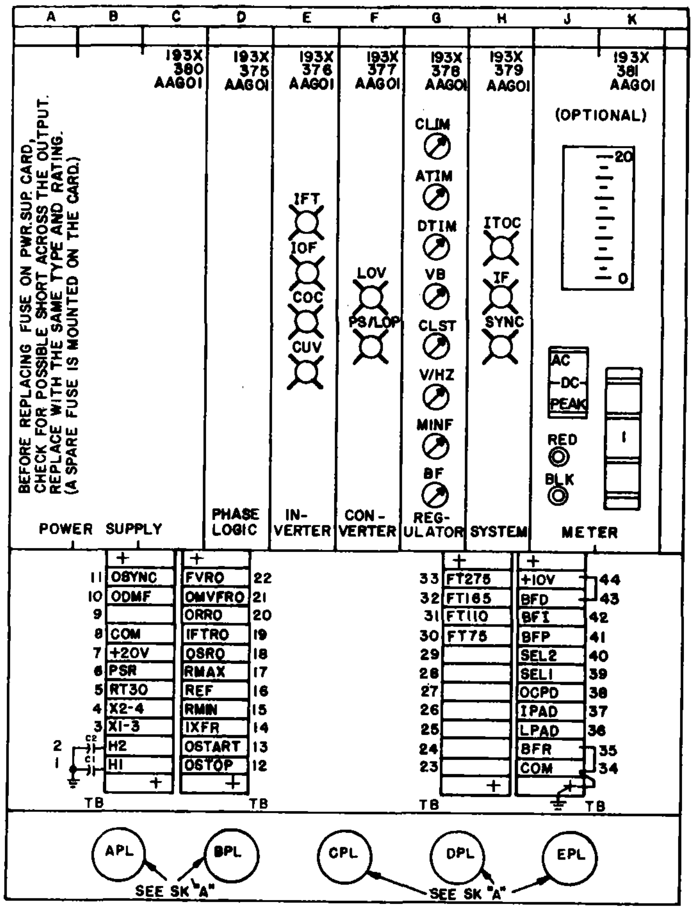

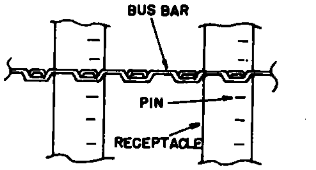

BUS BAR CONNECTIONS

FACTORY NOTES:

1. ASSEMBLE BUS BAR BEFORE WIRING. ALWAYS ASSEMBLE WITH THE BODY OF THE BUS TOWARD THE LOWER NUMBERED SIDE OF THE RECEPTACLE

ON PRINTED CIRCUIT CARDS USED IN THIS RACK THE LETTERS "AA" AFTER BASIC CATALOG NUMBER INDICATES ORIGINAL DESIGN. SUBSEQUENT DESIGNS WITH THE SAME BASIC NUMBERS AND GROUP NUMBER WITH THE SECOND LETTER CHANGED, SUCH AS AB, AC, AD, ETC., ARE DIRECTLY INTERCHANGEABLE AND MAY BE SUPPLIED IN PLACE OF THE "AA" CARDS.

THE PRINTED CIRCUIT CARD SHOULD ALWAYS BE REMOVED WITH THE CARD EXTRACTOR WHICH IS ATTACHED ON TOP OF THE CARD RACK. SOME CARDS CONTAIN PARTS WHICH WILL BE THERMALLY HOT AFTER BEING IN OPERATION. CARE SHOULD BE EXERCISED IN HANDLING ALL CARDS AFTER REMOVAL UNTIL THESE PARTS HAVE COOLED.

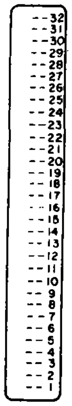

FRONT VIEW OF 32 PIN RECEPTACLE AS SEEN IN RACK CLOSED POSITION.

SKETCH "A"

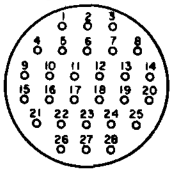

FRONT VIEW FROM PLUG SIDE

SYMBOLS

⌀ – POT ADJUSTMENT

¤ – INDICATING LIGHT

No revisions are to be made to this drawing without the specific approval of the Development Engineering Section of the Speed Variator Department.

REV. 3	REV. 2 m.a. SV872 #28	REV. 1 MARCH 23, 1977 SV872	APPROVALS ebr	GENERAL ELECTRIC	CONNECTION DIAGRAM AF-400 DRIVER	
REV. 4	ISSUED S.J. Holazak MAR.3,1977	PRINTS TO JA(CD) 5(S)	FIRST MADE FOR REQ. AF-400	SPEED VARIATOR PROD DEPT ERIE, PA., U.S.A.	36B590234AA CONT. ON SH. 2	SH. NO. 1
REV. 5	MADE BY Wikowski Aug 27, 1976	5B(S) 23 5OC(BK) 5	331X440AAG01			

5D(BK) 5T5(SD) 5QC(B)

SH. NO. 2

36B590234AA
CONT. ON SH. 3

BUS BAR TABLE

TABS	LOCATION	CIRCUIT
01	C D E F G H K	+20V
02	C D E F G H K	COM
03	F G H K	+10V

METAL JUMPER TABLE

TB34 TO TB MTG. SCREW
TB34 TO TB 35
TB43 TO TB44

BACK-PLANE WIRING

#24 WHITE

C01-C31
C32-E05

D20-E31
D21-E16
D22-E32
D23-E19
D24-E26
D25-E27-F11-K06
D27-H24
D28-E10-F32-K07
D29-E17
D30-E18-K05
D31-H30-K09
D32-E28-H08-H09

E11-K32
E12-K31
E13-K30
E14-F04-H23
E15-F07
E20-G18-K19
E21-F15-G22-H26-K16
E29-F09
E30-F06

F08-G20-H27
F12-H10
F18-G24
F21-G19-K15
F25-G21-K14
F13-H13
G05-K17
G06-H31
G07-G23
G10-H04
G14-H05
G15-H07-K10
G16-H11-K08
G17-H12
G26-K11
G27-K12
G28-K1[illegible]
G29-H17
G30-K18
G32-H28
G04-H16
G25-H14

PLUG WIRING

#24 WHITE

APL01-C10
APL02-D09
APL03-C03
APL05-C10
APL06-D08
APL07-C03
APL13-G28
APL14-H02
APL19-E11
APL20-E02
APL22-C10
APL23-D06
APL24-C03
APL26-C11
APL27-D05
APL28-C04

BPL01-C11
BPL02-D17
BPL03-C04
BPL05-C11
BPL06-D18
BPL07-C04
BPL13-G27
BPL14-G02
BPL19-E12
BPL20-D02
BPL22-C12
BPL23-D11
BPL24-C05
BPL26-C12
BPL27-D10
BPL28-C05

CPL01-C12
CPL02-D15
CPL03-C05
CPL05-C13
CPL06-D16
CPL07-C06
CPL13-G26
CPL14-F02
CPL19-E13
CPL20-D02
CPL22-C13
CPL23-D13
CPL24-C06
CPL26-C13
CPL27-D12
CPL28-C06

DPL01-C14
DPL02-F27
DPL03-C07
DPL04-C14
DPL05-F26
DPL06-C07
DPL09-C14
DPL10-F29

PLUG WIRING

#24 WHITE

DPL11-C07
DPL15-C15
DPL16-F28
DPL17-C08
DPL21-C15
DPL22-F31
DPL23-C08
DPL26-C15
DPL27-F30
DPL28-C08

EPL01-C16
EPL02-D07
EPL03-C09
EFL04-C16
EPL05-D19
EPL06-C09
EPL09-C16
EPL10-D14
EPL11-C09
EPL22-E04
EPL23-E02
EPL19-F20
EPL20-F19
EPL24-F16
EPL25-F17
EPL26-F24
EPL27-F22
EPL28-F23

No revisions are to be made to this drawing without the specific approval of the Development Engineering Section of the Speed Variator Department

REV. 3
REV. 4
REV. 5
REV. 2 8/1/77 m.c. SV 872 #11F
REV. 1 MARCH 22, 1977 SV 872 #1C
ISSUED MAR. 8, 1977
MADE BY Aug 30, 1976
PRINTS TO 5(S) 5A(CD) 5B(S) 23 5QC(BK) 5
5D(BK) 5T3(5D) 5QC(B)
APPROVALS ЕАР
FIRST MADE FOR REQ. AF-400
331X440AAG01

GENERAL ELECTRIC
SPEED VARIATOR DEPT.
ERIE, PA. U.S.A.

AF-400 DRIVER
WIRE TABLE
36B590234AA
CONT. ON SH. 3
SH. NO. 2

TERM. BD. WIRING
#24 WHITE
TB03-C27
TB04-C29
TB05-C21
TB06-C25
TB07-C01
TB08-C02
TB10-H32
TB11-H25
TB12-H21
TB13-H20
TB14-H22
TB15-H02
TB16-G30
TB17-*
T918-H06
TB19-H29
TB20-H18
TB21-H19
TB22-G05

TERM. BD. WIRING
#24 WHITE
TB30-E22
TB31-E25
TB32-E24
TB33-E23
TB34-G02
TB35-G13
TB36-*
TB37-*
TB38-*
TB39-*
TB40-*
TB41-G09
TB42-G11
TB43-G12
TB44-G03

WIRE TABLE

1TX LEADS

LEAD	CONNECTION
(BLK)H1	TB01
(BLK)H2	TB02
(BRN)X1	TB03
(BRN)X2	TB04
(GRN)X3	TB03
(GRN)X4	TB04
(YEL)X5	CUT & INSULATE
(YEL)X6	CUT & INSULATE

C1 & C2 CONNECTIONS

LEAD	CONNECTION
C1-H1	TB01
C2-H2	TB02
C1,C2-GRD	TB MTG. SCREW

*CONNECT RESISTOR WIRES AS INDICATED BELOW:

RESISTOR NOMEN.	1ST END CONN.	2ND END CONN.
RMAX	TB17	H01
LPAD	TB36	F12
IPAD	TB37	H09
OCPD	TB38	K19
SEL1	TB39	K13(MOVEABLE END)
SEL2	TB40	K15(MOVEABLE END)

MOVEABLE JUMPER CONNECTIONS

THE FIRST WIRE CONNECTION IS THE PERMANENT ONE.
THE SECOND WIRE CONNECTION IS THE MOVEABLE ONE.

#24 RED

K28- K20

RESISTOR WIRES

SEL1 - } SEE RESISTOR WIRE TABLE
SEL2 - }

REV. 3
REV. 2 9/10/77 m. Gatta SV-872
REV. 1 SV872
REV. 4
REV. 5
ISSUED S J Holsopple MAR 3, 1977
MADE BY Aug 30 197
PRINTS TO 5(S) JA(CD) 5B(3)23 5(QC) BK(5)
5TS(50) 5QC(B)
5D(BK)
APPROVALS
FIRST MADE FOR REQ. AF-400
331X440AAG01

GENERAL ELECTRIC

AF-400 DRIVER
WIRE TABLE
36B590234AA
CONT. ON SH. 4
SH. NO. 3

IF ONLY THE SECOND LETTER HAS CHANGED IN THE TWO LETTER GROUP OF THE CARD 193X NO., THE CARDS ARE INTERCHANGEABLE (AB REPLACES AA).

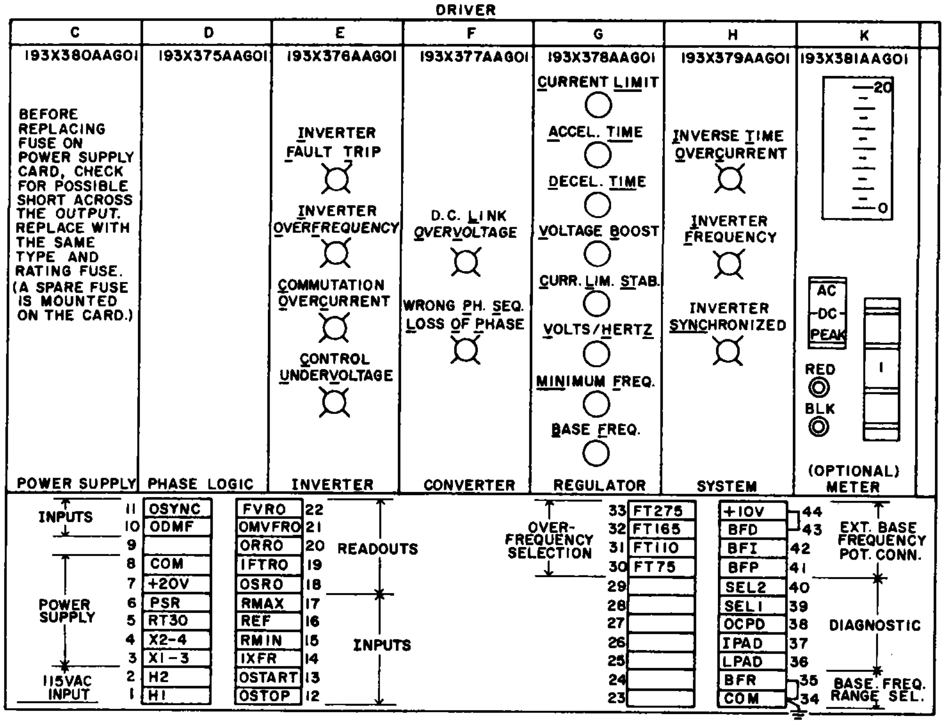

15 ½"

CARD REPLACEMENT INSTR.

MAKE POT SETTINGS (INCL. VLIM POT ON REGUL. CARD) AND CARD JUMPERS SAME AS ON ORIGINAL CARD.

SPACE FOR CAUTION LABEL
NP104X905BA148

460V JUMPER ON INVERTER CARD

460 VOLT INVERTER - JUMPER NEEDED
230 VOLT INVERTER - REMOVE JUMPER

60HZ JUMPER ON CONVERTER CARD

60HZ AC SUPPLY - JUMPER NEEDED
50HZ AC SUPPLY - REMOVE JUMPER

SPACE FOR CAUTION LABEL
NP104X905BA067

BASE FREQUENCY RANGE SELECTION

BASE FREQ. RANGE	37.5 TO 75HZ	75 TO 150HZ
JUMPER TB35 TO	TB34	TB35

FREQUENCY TRIP SELECTION

FREQUENCY TRIP	75HZ	110HZ	165HZ	275HZ
JUMPER TB30 TO	TB30	TB31	TB32	TB33

SPACE FOR WARNING LABEL
NP104X905BA068

SELECTOR SWITCH POS.	OPTIONAL METER CARD		METER READING (± 1.0 MAX. ERROR)				
	SELECTED SIGNAL	SCALE SELECT.	OFF CONDITION	0 REF. 0 LOAD	1/2 REF. 1/2 LOAD	1 REF. 1 LOAD	SPECIAL CONDITION
1	+10V - POWER SUPPLY MIDPOINT	DC	10	10	10	10	
2	REF - REFERENCE VOLTAGE	DC	①	0	7.5	15	
3	FVRO - INVERTER FREQUENCY	DC	0.3 TO 1.5	0.3 TO 1.5	6 ②	12 ②	
4	LVF - DC LINK VOLTAGE	DC	0 TO 1.5	0 TO 0.5	7.5 ③	15 ③	
5	CVF - CONVERTER VOLTAGE FEEDBACK	DC	9.7	10	7.7	5.5	
6	CVR - CONVERTER VOLTAGE REFERENCE	DC	10.5	8 TO 10.5	6	3.5	
7	CFA - AC MOTOR CURRENT - PHASE A	AC(X10)	0	0	5	10	15 AT 1.5 LOAD
8	CFB - AC MOTOR CURRENT - PHASE B	AC(X10)	0	0	5	10	15 AT 1.5 LOAD
9	CFC - AC MOTOR CURRENT - PHASE C	AC(X10)	0	0	5	10	15 AT 1.5 LOAD
10	OCL - CURRENT LIMIT SIGNAL	DC	15 TO 17	15 TO 17	15 TO 17	15 TO 17	4 TO 8 AT CURR. LIMIT
11	IRI - INVERTER RUN SIGNAL	DC	0	17 TO 19	17 TO 19	17 TO 19	
12	OIS - INVERTER SYNCHRONIZE SIGNAL	DC	17 TO 19	17 TO 19	17 TO 19	17 TO 19	0 AT SYNCH.
13	DFS - DELAYED FIRING SUPPLY	DC	17 TO 19	17 TO 19	17 TO 19	17 TO 19	
14	IIPT - INVERTER FIRING PULSE TRAIN	PEAK/DC	17 TO 19/1	17 TO 19/1	17 TO 19/1	17 TO 19/1	
15	ICFF - INVERTER 3 PHASE LOGIC SIGNAL	PEAK/DC	17 TO 19/0	17 TO 19/0	17 TO 19/0	17 TO 19/0	
16	CCA - INV. PEAK COMM. CURR. - PH. A	PEAK	0	9 TO 11	11 TO 13	12 TO 14	
17	CCB - INV. PEAK COMM. CURR. - PH. B	PEAK	0	9 TO 11	11 TO 13	12 TO 14	
18	CCC - INV. PEAK COMM. CURR. - PH. C	PEAK	0	9 TO 11	11 TO 13	12 TO 14	
19 ④	SEL - D TAB 5, 6, 7, 10, 11, 12, 13, 14 & 19	PEAK/DC	0	15 TO 18/0	15 TO 18/0	15 TO 18/0	0 AFTER FAULT
19 ④	SEL - D TAB 8, 9, 15, 16, 17 & 18	PEAK/DC	0	16 TO 19/2	16 TO 19/2	16 TO 19/2	0 AFTER FAULT
19 ④	SEL - F TAB 26, 27, 28, 29, 30 & 31	PEAK/DC	16 TO 19/1	16 TO 19/1	16 TO 19/1	16 TO 19/1	0 AFTER FAULT

① DEPENDENT ON REFERENCE SETTING.

② READINGS SHOWN ARE FOR 60HZ BASE FREQUENCY. ACTUAL FREQUENCIES ARE 5 TIMES METER READING FOR TAB35 CONN. TO TAB34 OR 10 TIMES METER READING FOR TAB35 OPEN.

③ ACTUAL DC LINK VOLTAGES ARE 20 TIMES METER READING FOR 230 VOLT DRIVES AND 40 TIMES METER READING FOR 460 VOLT DRIVES.

④ POS. 19 IS FOR DRIVER BACKPLANE SELECTOR PROBE. READINGS SHOWN ARE SCR FIRING SIGNALS.

36B590 234AA SH.4

10"

1. SIZE AS INDICATED.
2. CUT TO SIZE.
3. PRINT ON FASSON WHITE CONVENTION BADGE (LAPEL) STOCK NO. 65P.

REV. 1 MARCH 25, 1977 SV872 #11C	ISSUED S.J. Wolszyk MAR. 3, 1977	PRINTS TO	FIRST MADE FOR REQ. AF-400	GENERAL ELECTRIC SPEED VARIATOR PROD DEPT ERIE, PA., U.S.A.	LABEL ARTWORK AF-400 DRIVER
REV. 2 M Cotton SV872 #28	MADE BY S.J. Wolszyk FEB 7, 1977	5(S) 3A(CD) 5B(AU3) 5D(BK) 5E(BR) 5F(B) 5TS(50)	331X440AAG01		36B590 234AA SH. NO. 4 CONT. ON SH. FL

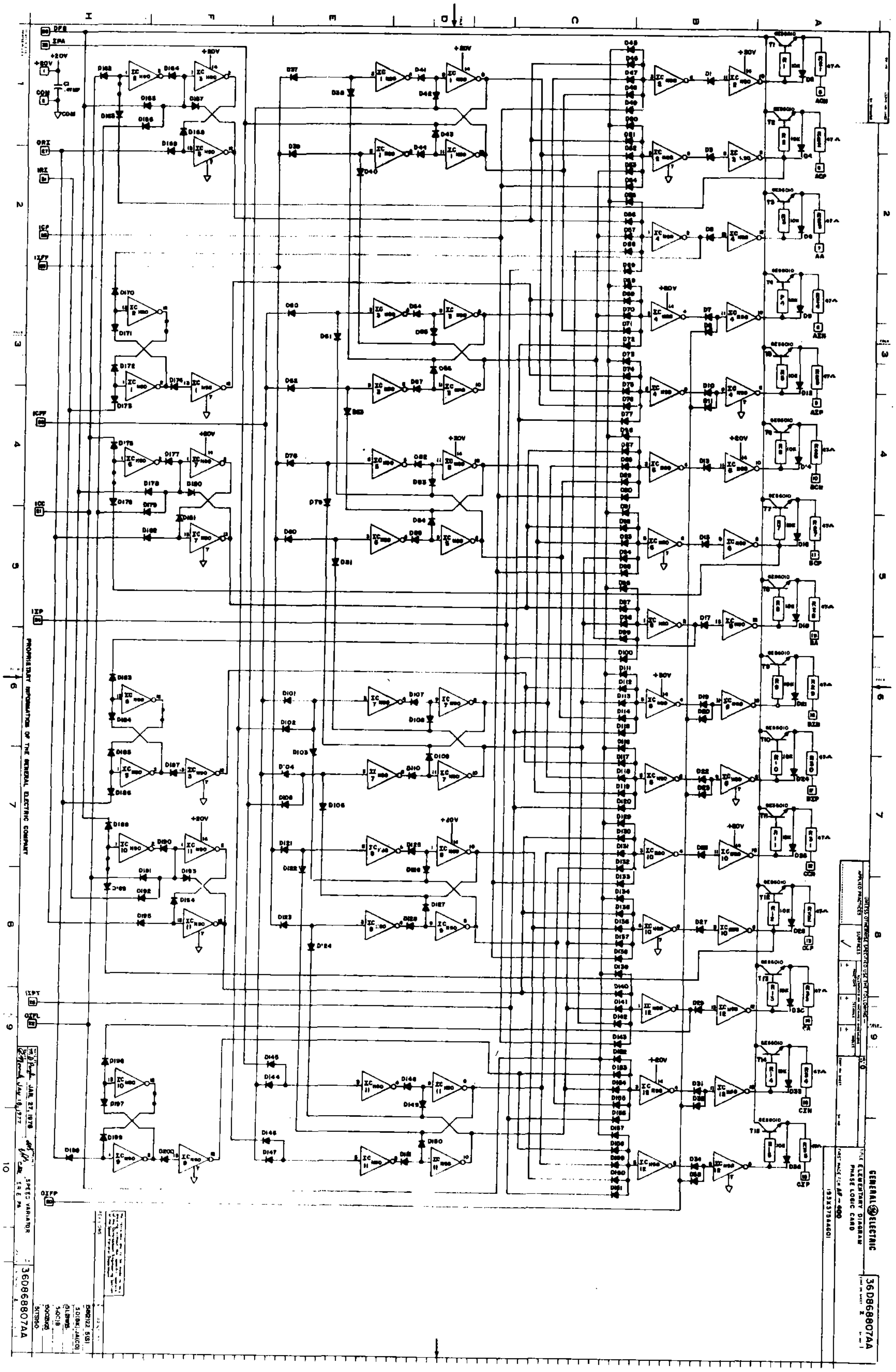GENERAL ELECTRIC
ELEMENTARY DIAGRAM
PHASE LOGIC CARD
FIRST MADE FOR AF-400
193X375AAG01
36D868807AA
CONT ON SHEET 2
UNLESS OTHERWISE SPECIFIED USE THE FOLLOWING—
APPLIED PRACTICES
SURFACES
PROPRIETARY INFORMATION OF THE GENERAL ELECTRIC COMPANY
SPEED VARIATOR
36D868807AA
JAN. 27, 1976
DFB
IPA
+20V
CON
ORI
IRI
ICP
IZFP
ICFP
ICC
IXP
IXPY
OZFL
OZFP
AON
AOP
AA
AZN
AZP
BCN
BCP
BA
BZN
BZP
CCN
CCP
CA
CZN
CZP
47A
+20V
H
F
E
D
C
B
A
1
2
3
4
5
6
7
8
9
10

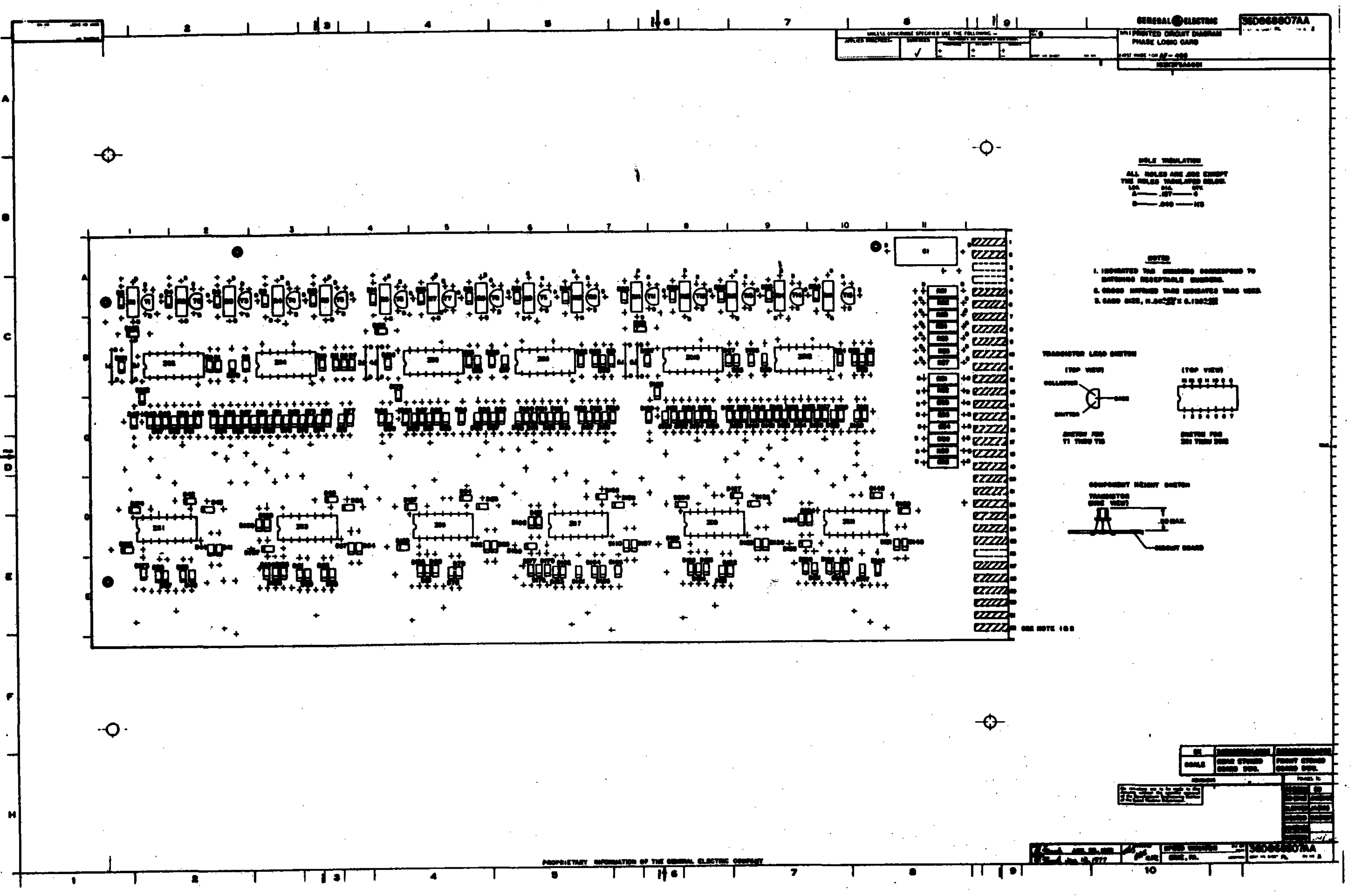
GENERAL ELECTRIC
36D868807AA
PRINTED CIRCUIT DIAGRAM
PHASE LOGIC CARD
HOLE TABULATION
NOTES
1. INDICATED TAB NUMBERS CORRESPOND TO MATCHING RECEPTACLE NUMBERS.
2. CROSS HATCHED TABS INDICATES TABS USED.
3. CARD SIZE
TRANSISTOR LEAD SKETCH
(TOP VIEW)
COLLECTOR
BASE
EMITTER
SKETCH FOR T1 THRU T12
(TOP VIEW)
SKETCH FOR
COMPONENT HEIGHT SKETCH
TRANSISTOR (SIDE VIEW)
MAX.
CIRCUIT BOARD
SEE NOTE 1 & 2
PROPRIETARY INFORMATION OF THE GENERAL ELECTRIC COMPANY

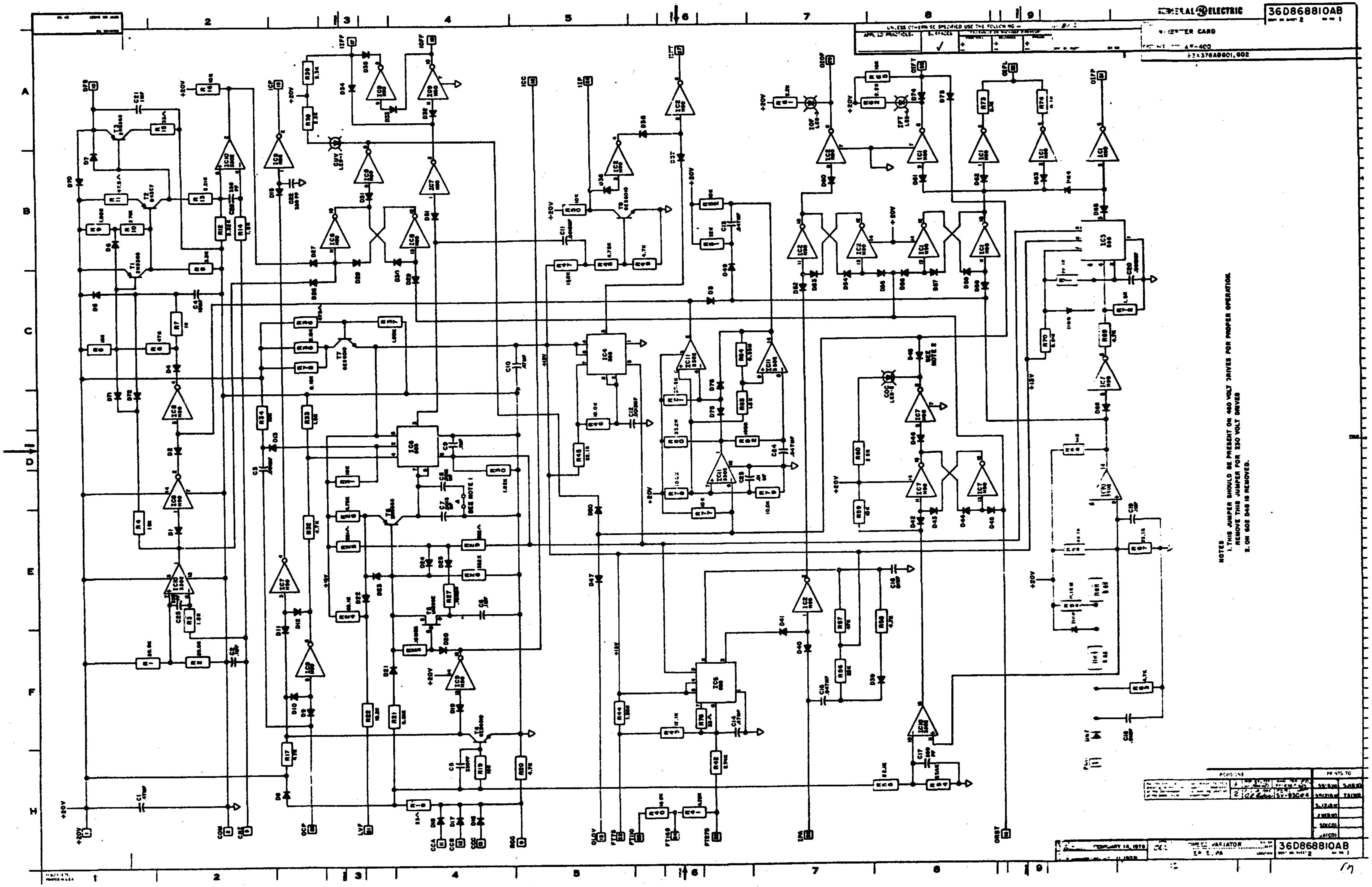

GENERAL ELECTRIC

36D868810AB

2

1

UNLESS OTHERWISE SPECIFIED USE THE FOLLOWING —

APPLIED PRACTICES

SURFACES ✓

INVERTER CARD

AF-400

36D868810AB 1, 602

REVISIONS

2

SV-93C#4

PRINTS TO

FEBRUARY 14, 1978

VARIATOR

ERIE, PA

36D868810AB

2

1

NOTES

1. THIS JUMPER SHOULD BE PRESENT ON 460 VOLT DRIVES FOR PROPER OPERATION. REMOVE THIS JUMPER FOR 230 VOLT DRIVES

2. ON 602 D46 IS REMOVED.

GENERAL ELECTRIC 36D868810AB

UNLESS OTHERWISE SPECIFIED USE THE FOLLOWING:—

SURFACES ✓

TITLE PRINTED CIRCUIT DIAGRAM
INVERTER CARD

FIRST MADE FOR AF-400

193X376AB601, 602

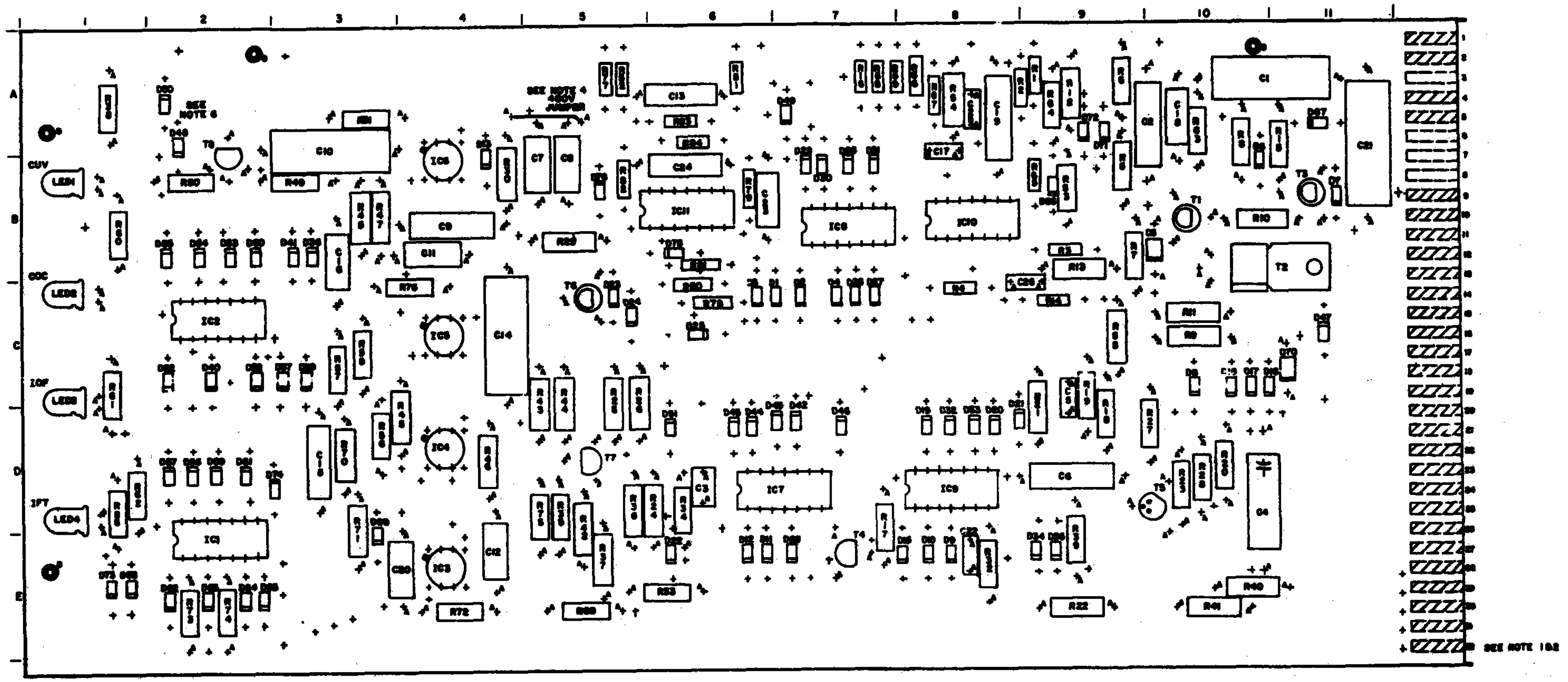

HOLE TABULATION

ALL HOLES .032 DIA. EXCEPT
THE HOLES TABULATED BELOW

A —— .040 —— 217
B —— .157 —— 4

NOTES

1. INDICATED TAB NUMBERS CORRESPOND TO MATCHING RECEPTACLE NUMBERS.
2. CROSS HATCHED TABS INDICATES TABS USED
3. CARD SIZE, 11.50 [illegible] X 5.130 [illegible]
4. 460V JUMPER IS TO BE PUT ON ALL CARDS. THIS JUMPER WILL BE REMOVED FOR 230V APPLICATIONS.
5. ALL COMPONENTS SHALL BE MOUNTED TO A .50 INCH MAXIMUM ABOVE THE CARD SURFACE AS SHOWN BELOW.
6. ON 602 THE D46 DIODE IS DELETED.

COMPONENT HEIGHT SKETCH
TRANSISTOR
(SIDE VIEW)

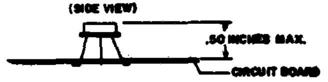

TRANSISTOR LEAD SKETCHES

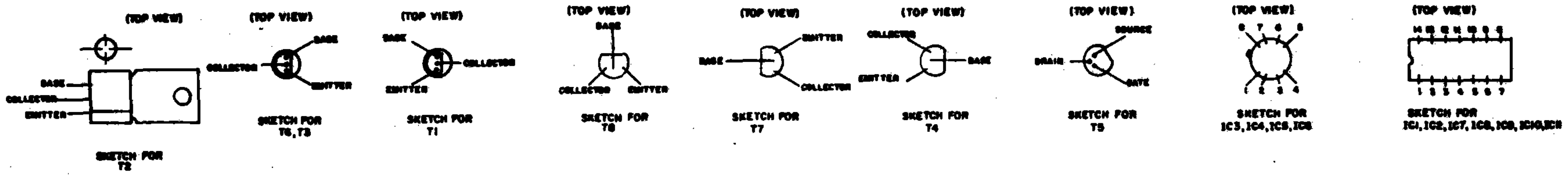

1	0	2X	[illegible]	[illegible]
FRONT	BACK	SCALE	REAR ETCHED BOARD DWG.	FRONT ETCHED BOARD DWG.
SPACE UNIT REQUIREMENT				

REVISIONS

PRINTS TO

FEB. 22, 1978

SPEED VARIATOR

ERIE, PA

36D868810AB

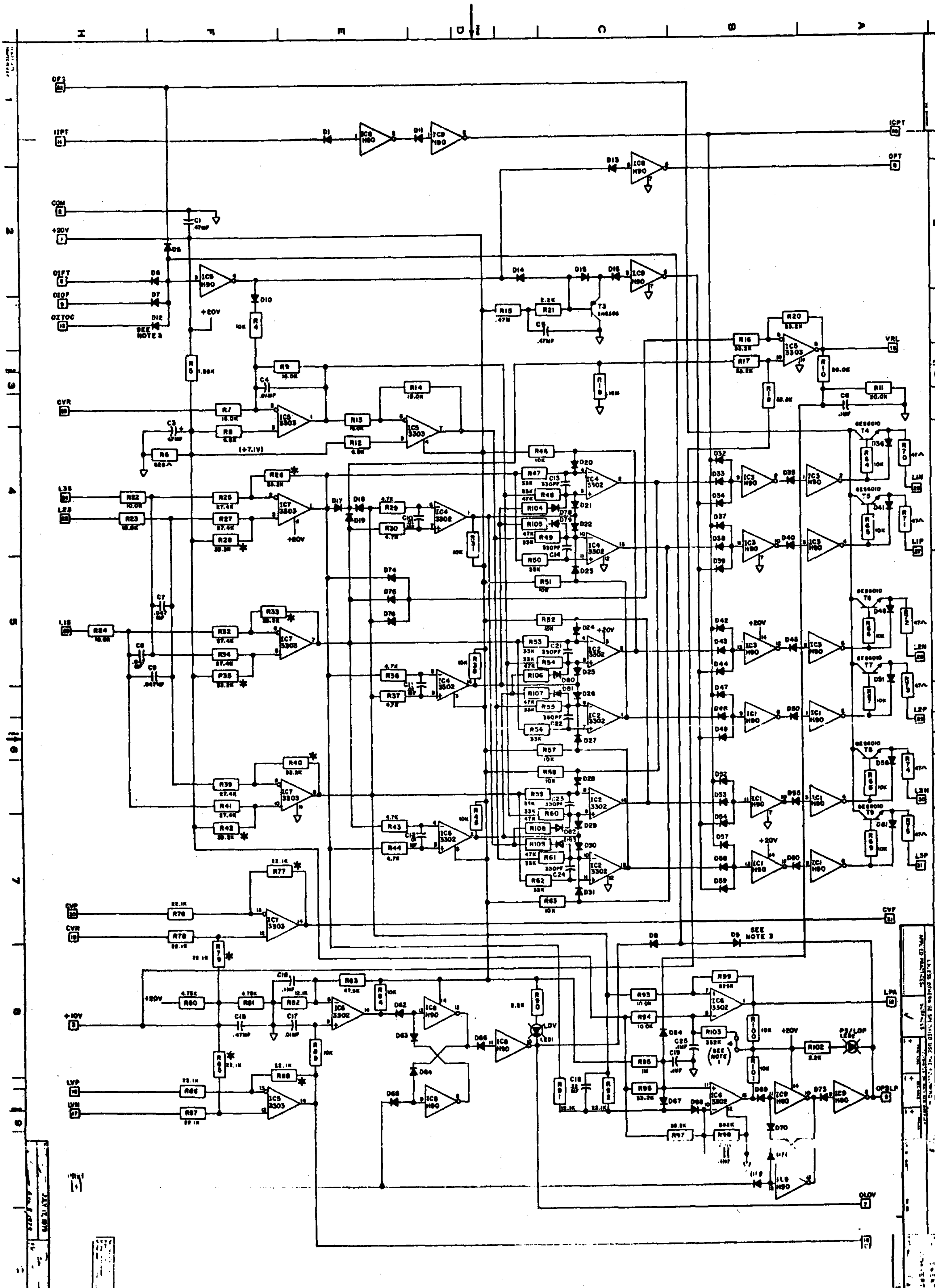

NOTES:

1. THIS JUMPER MUST BE PRESENT ON 60 HZ DRIVES FOR PROPER OPERATION. REMOVE THIS JUMPER FOR 50 HZ DRIVES.
2. ✱ DENOTES 1/4 WATT RESISTOR
3. ON G02 DIODES D9 AND D12 ARE REMOVED.

GENERAL ELECTRIC
ELEMENTARY DIAGRAM
ADAPTER CARD
AF-400
33X377ABG01, G02

36D868812AB

UNLESS OTHERWISE SPECIFIED USE THE FOLLOWING
APPLIED PRACTICES

SPEED VARIATOR
ERIE, PA

36D868812AB

GENERAL ELECTRIC 36D868812AB

TITLE PRINTED CIRCUIT DIAGRAM
CONVERTER CARD

FIRST MADE FOR AF-400

193X377AB 601, 602

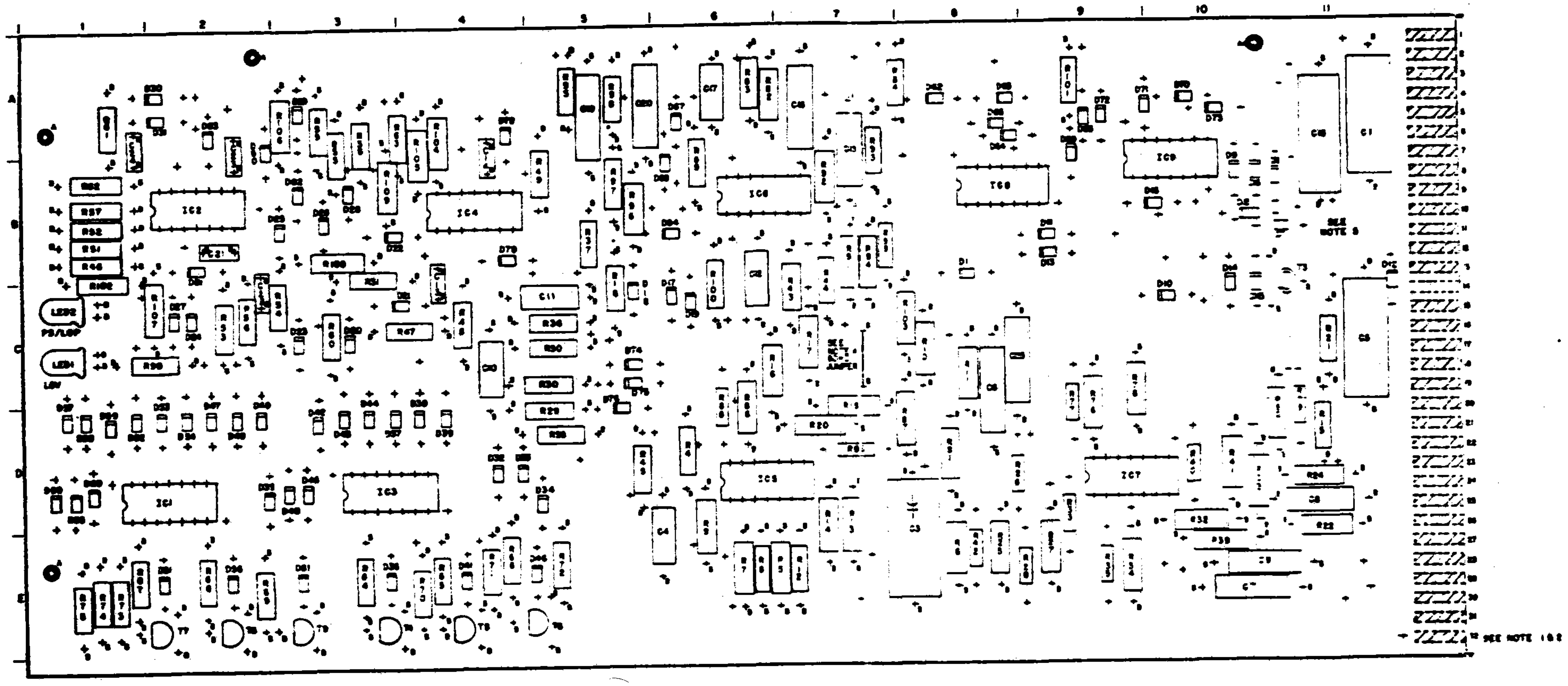

HOLE TABULATION

ALL HOLES ARE .032 DIA. EXCEPT
THE HOLES TABULATED BELOW.

LOC.	DIA.	QTY.
A	.157	4
B	.040	257

NOTES

1. INDICATED TAB NUMBERS CORRESPOND TO MATCHING RECEPTACLE NUMBERS.
2. CROSS HATCHED TABS INDICATES TABS USED.
3. CARD SIZE, 11.50 $^{+.000}_{-.015}$ X 5.130 $^{+.002}_{-.006}$
4. 60HZ JUMPER IS TO BE PUT ON ALL CARDS. THIS JUMPER WILL BE REMOVED FOR 50HZ APPLICATIONS.
5. ON 602 DIODES D9 AND D12 ARE DELETED.

TRANSISTOR LEAD SKETCHES

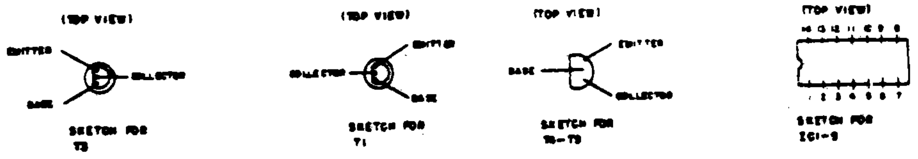

2X	36B608257AA005	36B608258AA005
SCALE	REAR ETCHED BOARD DWG.	FRONT ETCHED BOARD DWG.

ERIE, PA., USA

36D868812AB

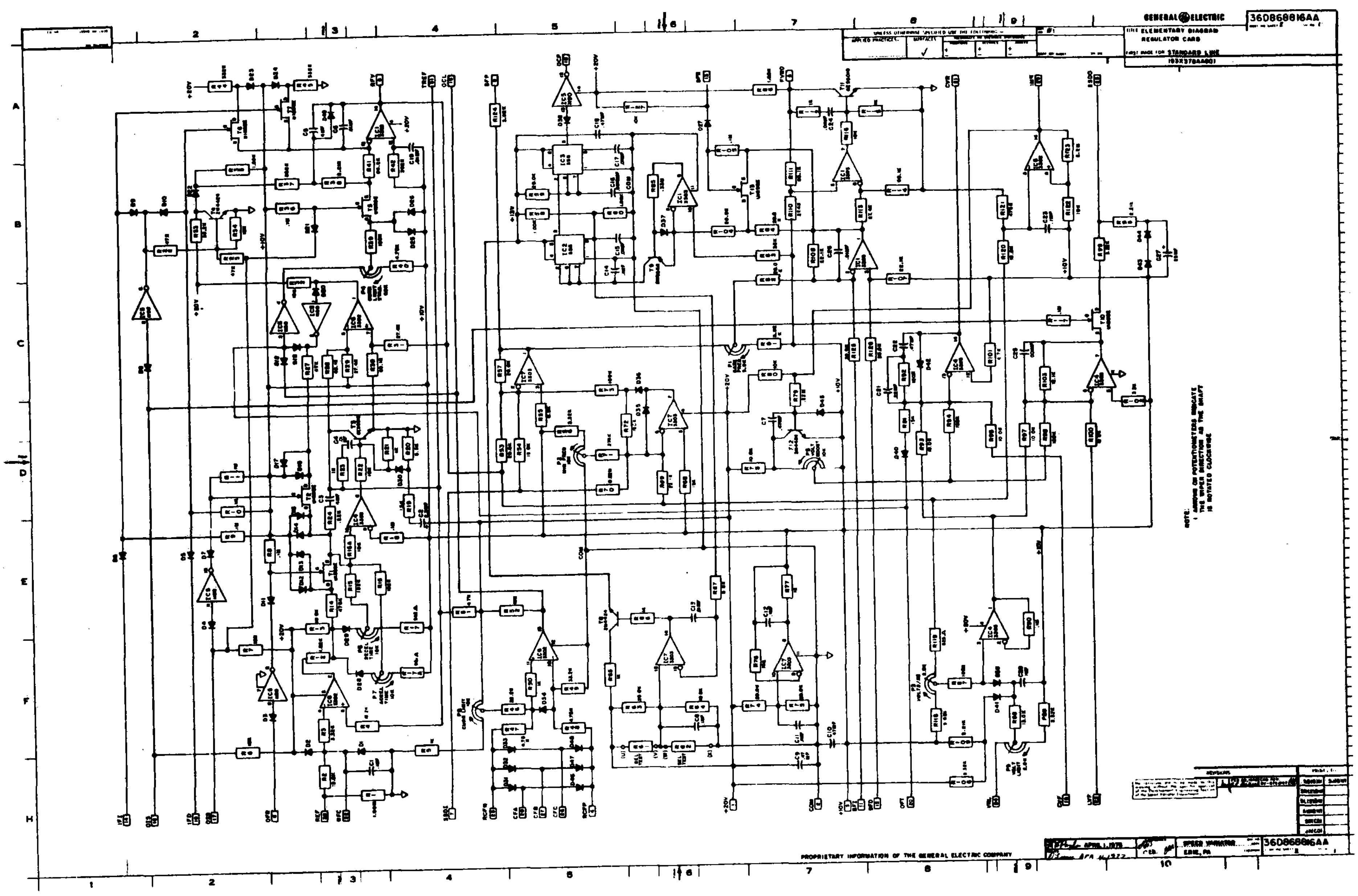

GENERAL ELECTRIC

36D868816AA

ELEMENTARY DIAGRAM
REGULATOR CARD

FIRST MADE FOR STANDARD LINE
193X378AA001

NOTE:
1 ARROWS ON POTENTIOMETERS INDICATE THE WIPER DIRECTION AS THE SHAFT IS ROTATED CLOCKWISE

PROPRIETARY INFORMATION OF THE GENERAL ELECTRIC COMPANY

SPEED VARIATOR
ERIE, PA

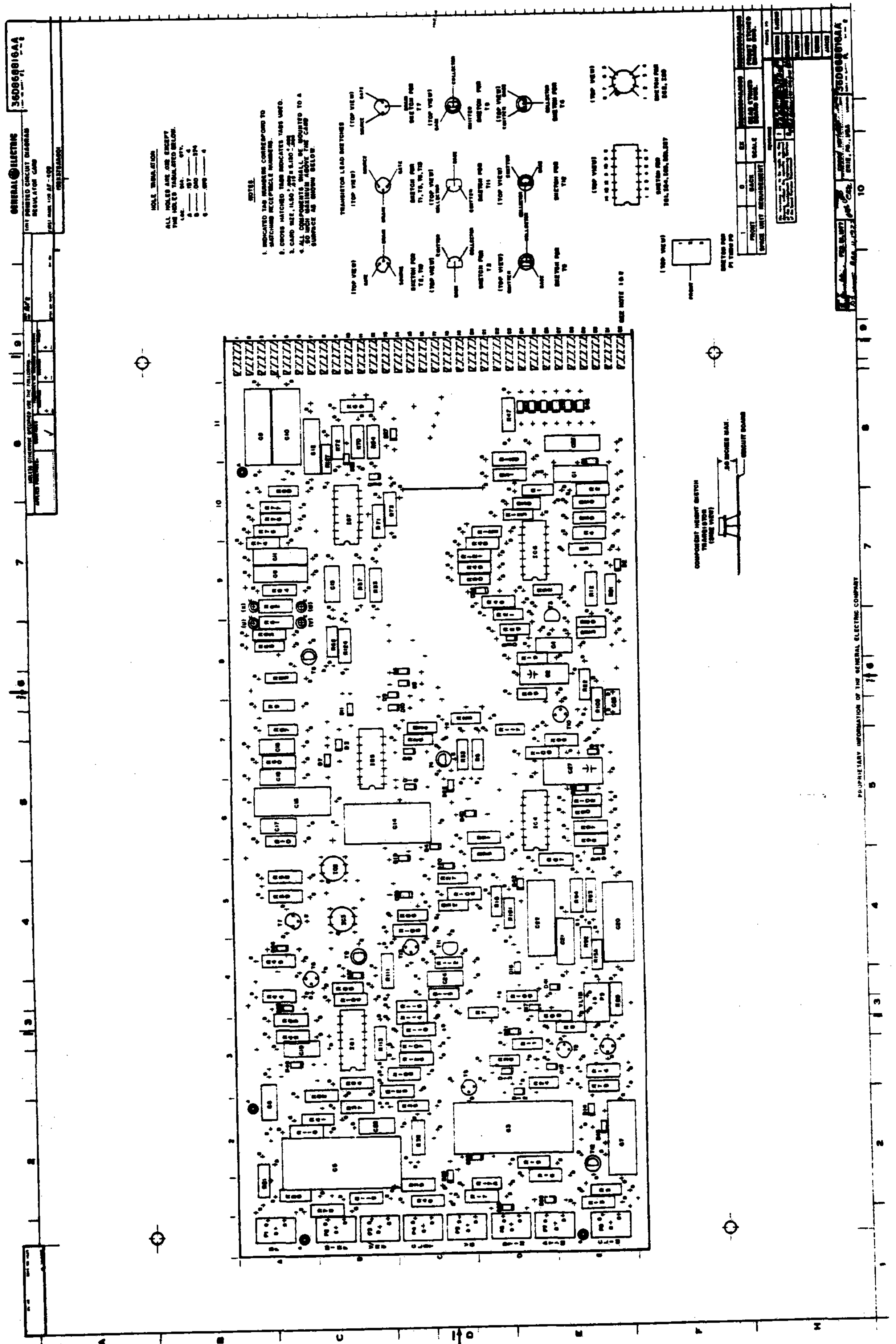
GENERAL ELECTRIC
36D868816AA
PRINTED CIRCUIT DIAGRAM
REGULATOR CARD
NOTES
TRANSISTOR LEAD SKETCHES
COMPONENT HEIGHT SKETCH
PROPRIETARY INFORMATION OF THE GENERAL ELECTRIC COMPANY
A
B
C
D
E
F
H
1
2
3
4
5
6
7
8
9
10

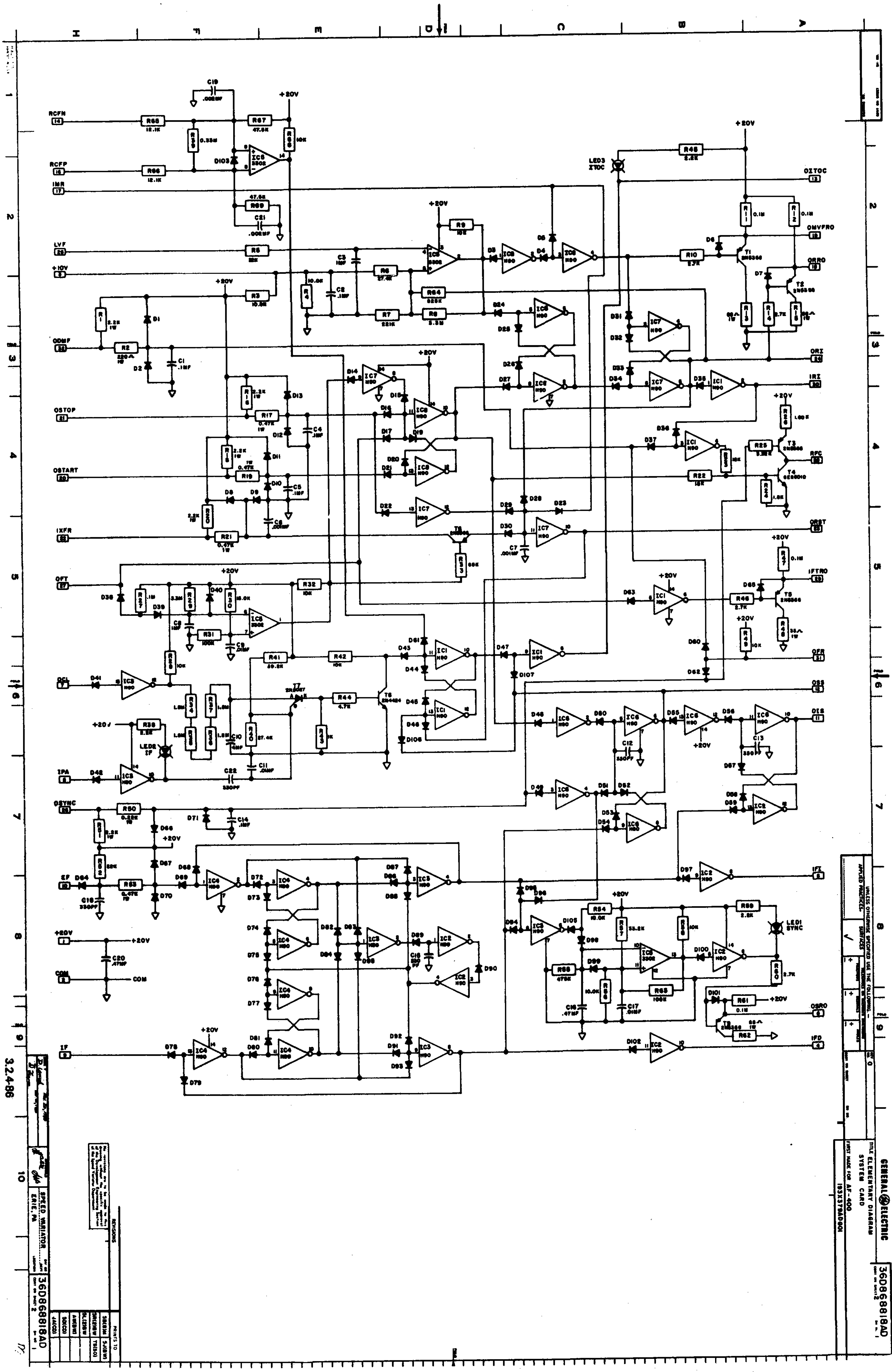

GENERAL ELECTRIC

TITLE ELEMENTARY DIAGRAM
SYSTEM CARD

FIRST MADE FOR AF-400
193X378ADG01

36D868818AD
CONT ON SHEET 2
SH NO 1

SPEED VARIATOR
ERIE, PA

No revisions are to be made to this drawing without the specific approval of the Development Engineering Section of the Speed Variator Department.

REVISIONS

PRINTS TO
3B(GW) 3J(GW)
3R(GNW) TS(SO)
3L(2/3GW
AW(GW)
3D(CD)
4A(CD)

3.2.4-86

GENERAL ELECTRIC

36D868818AD
CONT ON SHEET FL. SH NO 2

TITLE PRINTED CIRCUIT DIAGRAM
SYSTEM

FIRST MADE FOR AF-400

193X379AD801

UNLESS OTHERWISE SPECIFIED USE THE FOLLOWING:–

APPLIED PRACTICES–	SURFACES			
	✓	±	±	±

REV NO. 0

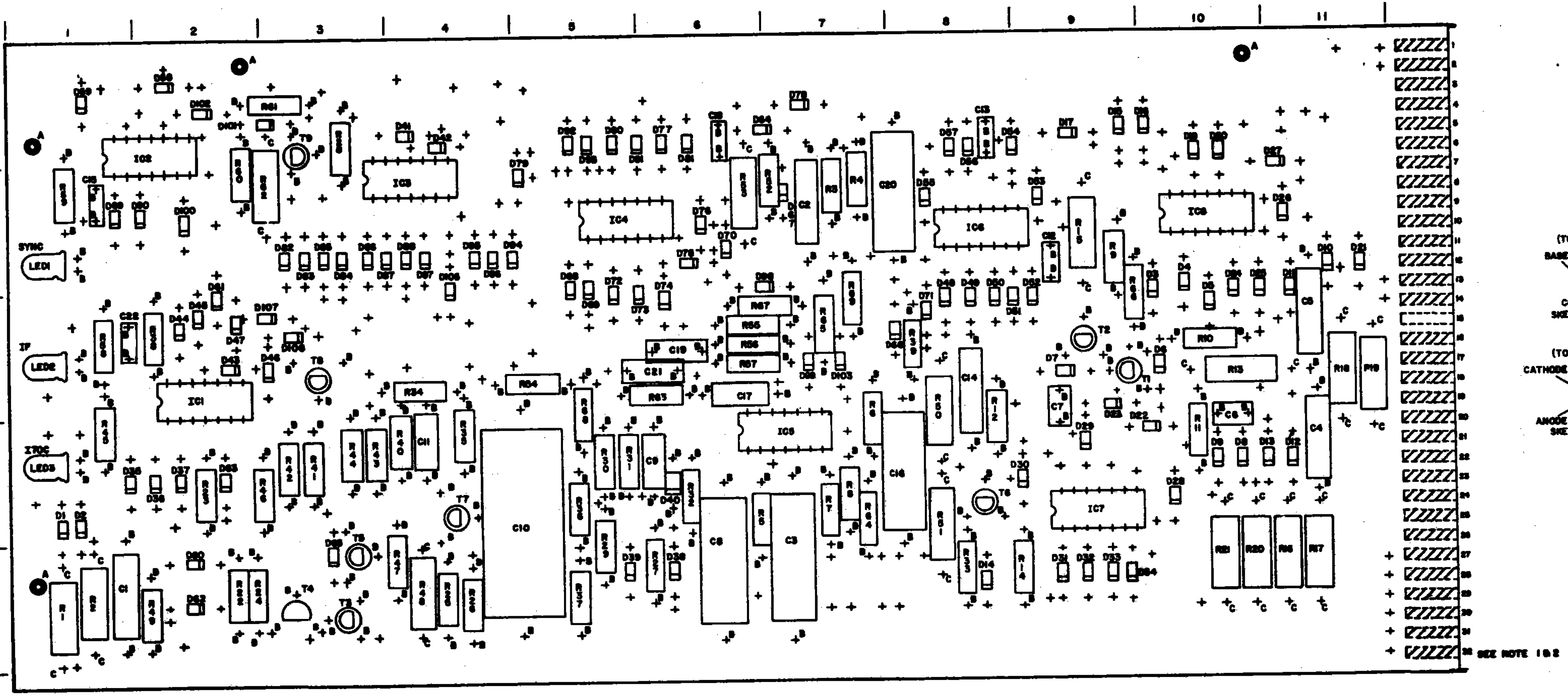

HOLE TABULATION

ALL HOLES ARE .032 EXCEPT THE HOLES TABULATED BELOW.

LOC.	DIA.	QTY.
A	.157	4
B	.040	167
C	.062	30

NOTES

1. INDICATED TAB NUMBERS CORRESPOND TO MATCHING RECEPTACLE NUMBERS.
2. CROSS HATCHED TABS INDICATES TABS USED.
3. CARD SIZE, $11.50^{+.000}_{-.015}$ X $5.130^{+.008}_{-.008}$

TRANSISTOR LEAD SKETCHES

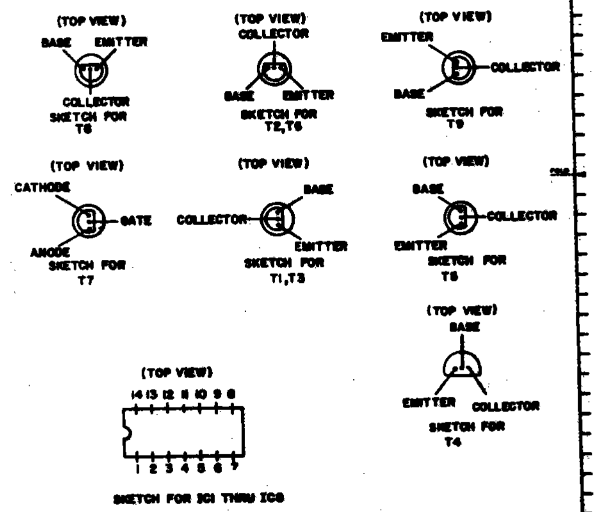

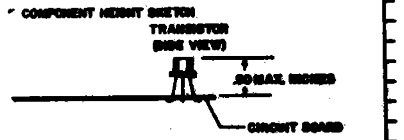

		FRONT	BACK
2X	[illegible]	[illegible]	
SCALE		REAR ETCHED BOARD DWG.	FRONT ETCHED BOARD DWG.

REVISIONS

No revisions are to be made to this drawing without the specific approval of the Development Engineering Section of the Speed Variator Department.

PRINTS TO

speed variator
ERIE, PA., USA

36D868818AD
CONT ON SHEET FL. SH NO 2

3.2.4-87

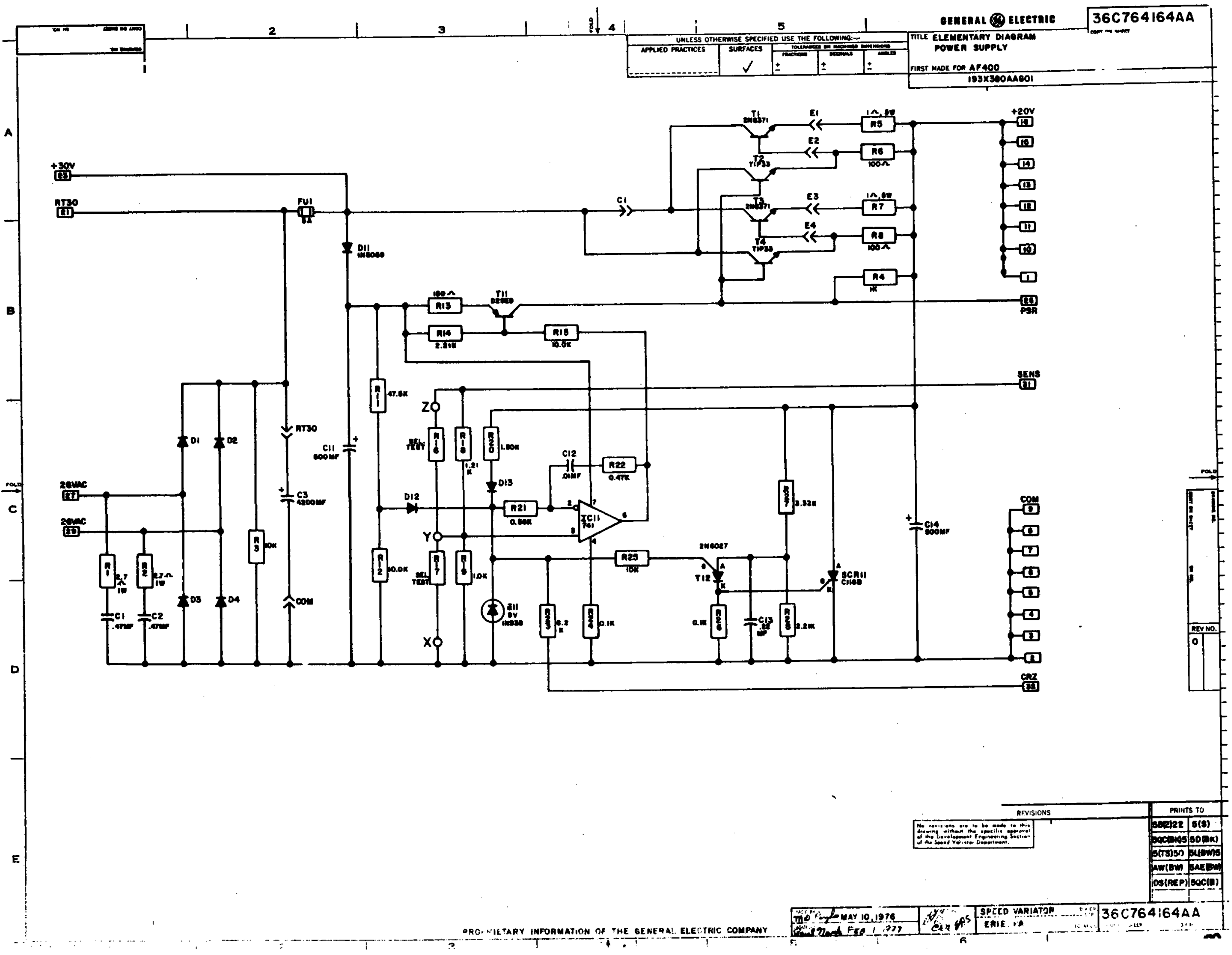

GENERAL ELECTRIC

36C764164AA

UNLESS OTHERWISE SPECIFIED USE THE FOLLOWING:—

APPLIED PRACTICES	SURFACES	TOLERANCES ON MACHINED DIMENSIONS		
		FRACTIONS	DECIMALS	ANGLES
	✓	±	±	±

TITLE ELEMENTARY DIAGRAM
POWER SUPPLY

FIRST MADE FOR AF400

193X380AA601

REVISIONS

No revisions are to be made to this drawing without the specific approval of the Development Engineering Section of the Speed Variator Department.

PRINTS TO	
58(2)22	5(S)
5QC(BK)5	5D(BK)
5(TS)50	5L(BW)5
AW(BW)	5AE(BW)
DS(REP)	5QC(B)

MAY 10, 1976
Feb 1 1977

SPEED VARIATOR
ERIE PA

36C764164AA

PROPRIETARY INFORMATION OF THE GENERAL ELECTRIC COMPANY

GENERAL ELECTRIC 36D868820AA

TITLE PRINTED CIRCUIT DIAGRAM
POWER SUPPLY
FIRST MADE FOR AF-40C

UNLESS OTHERWISE SPECIFIED USE THE FOLLOWING -
APPLIED PRACTICES SURFACES ✓

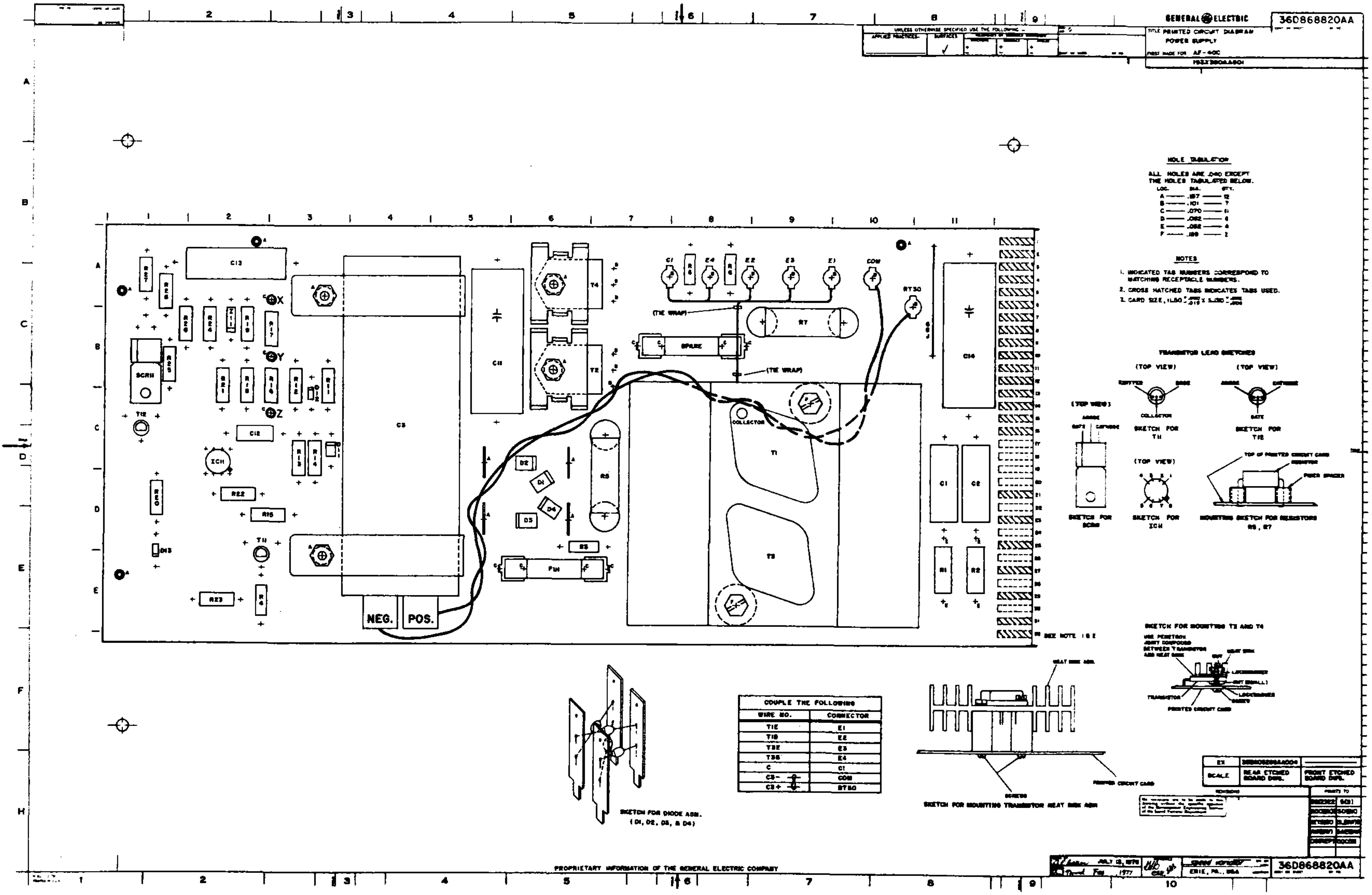

HOLE TABULATION

ALL HOLES ARE .040 EXCEPT
THE HOLES TABULATED BELOW.

LOC.	DIA.	QTY.
A	.187	12
B	.101	7
C	.070	11
D	.062	4
E	.062	4
F	.180	2

NOTES

1. INDICATED TAB NUMBERS CORRESPOND TO MATCHING RECEPTACLE NUMBERS.
2. CROSS HATCHED TABS INDICATES TABS USED.
3. CARD SIZE, 11.50 $^{+.000}_{-.015}$ X 5.000 $^{+.000}_{-.005}$

TRANSISTOR LEAD SKETCHES

(TOP VIEW) EMITTER BASE COLLECTOR SKETCH FOR T11

(TOP VIEW) ANODE CATHODE GATE SKETCH FOR T12

(TOP VIEW) ANODE GATE CATHODE SKETCH FOR SCR11

(TOP VIEW) SKETCH FOR ICH

TOP OF PRINTED CIRCUIT CARD RESISTOR FIBER SPACER MOUNTING SKETCH FOR RESISTORS R5, R7

SKETCH FOR MOUNTING T2 AND T4

USE PENETROX JOINT COMPOUND BETWEEN TRANSISTOR AND HEAT SINK

HEAT SINK NUT LOCKWASHER NUT (SMALL) LOCKWASHER SCREW TRANSISTOR PRINTED CIRCUIT CARD

COUPLE THE FOLLOWING	
WIRE NO.	CONNECTOR
T1E	E1
T1B	E2
T3E	E3
T3B	E4
C	C1
C3-	COM
C3+	RT30

EX		
SCALE	REAR ETCHED BOARD DWG.	FRONT ETCHED BOARD DWG.

PRINTS TO

PROPRIETARY INFORMATION OF THE GENERAL ELECTRIC COMPANY

JULY 13, 1976
Feb 1977
ERIE, PA., USA
36D868820AA

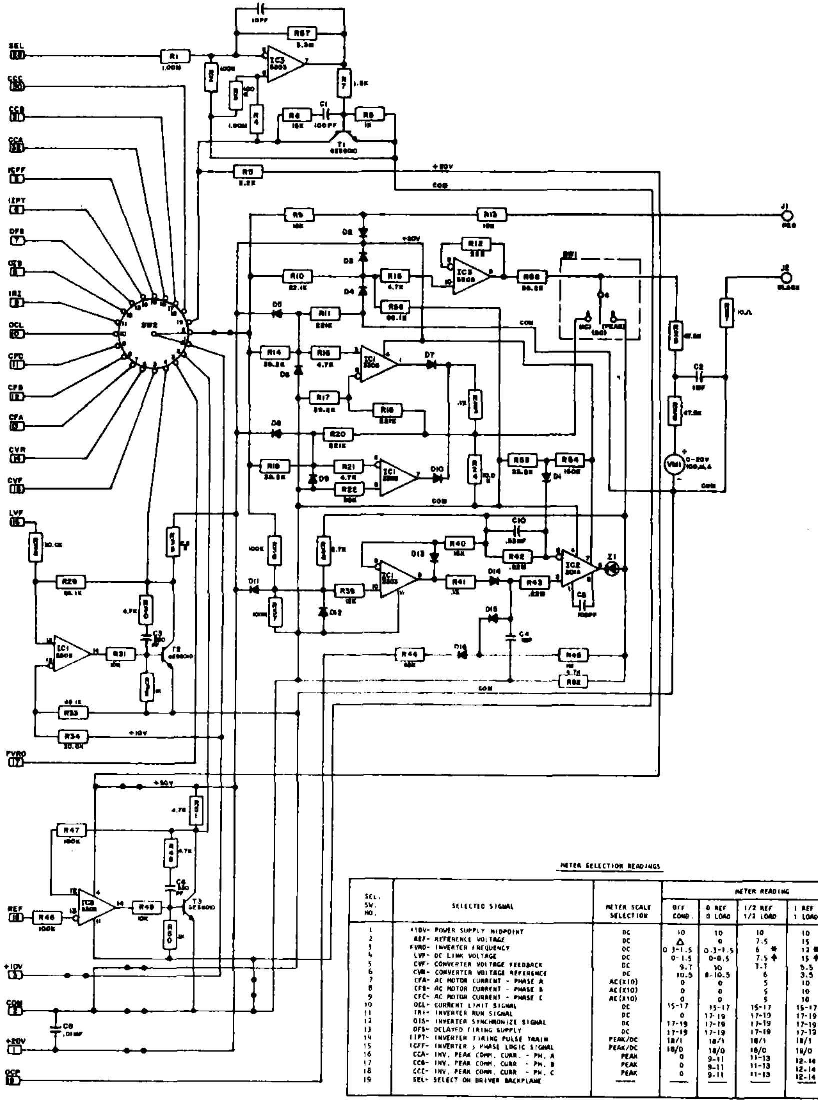

METER SELECTION READINGS

SEL. SW. NO.	SELECTED SIGNAL	METER SCALE SELECTION	METER READING				
			OFF COND.	0 REF 0 LOAD	1/2 REF 1/2 LOAD	1 REF 1 LOAD	SPECIAL CONDITION
1	+10V- POWER SUPPLY MIDPOINT	DC	10	10	10	10	10
2	REF- REFERENCE VOLTAGE	DC	△	0	7.5	15	———
3	FVRO- INVERTER FREQUENCY	DC	0.3-1.5	0.3-1.5	6 *	12 *	———
4	LVF- DC LINK VOLTAGE	DC	0-1.5	0-0.5	7.5 ✦	15 ✦	———
5	CVF- CONVERTER VOLTAGE FEEDBACK	DC	9.7	10	7.7	5.5	———
6	CVR- CONVERTER VOLTAGE REFERENCE	DC	10.5	8-10.5	6	3.5	———
7	CFA- AC MOTOR CURRENT - PHASE A	AC(X10)	0	0	5	10	15 AT 1.5 LOAD
8	CFB- AC MOTOR CURRENT - PHASE B	AC(X10)	0	0	5	10	15 AT 1.5 LOAD
9	CFC- AC MOTOR CURRENT - PHASE C	AC(X10)	0	0	5	10	15 AT 1.5 LOAD
10	OCL- CURRENT LIMIT SIGNAL	DC	15-17	15-17	15-17	15-17	4-8 AT CURR. LIM.
11	IRI- INVERTER RUN SIGNAL	DC	0	17-19	17-19	17-19	———
12	OIS- INVERTER SYNCHRONIZE SIGNAL	DC	17-19	17-19	17-19	17-19	0 AT SYNCH.
13	OFS- DELAYED FIRING SUPPLY	DC	17-19	17-19	17-19	17-13	———
14	IIPT- INVERTER FIRING PULSE TRAIN	PEAK/DC	18/1	18/1	18/1	18/1	———
15	ICFF- INVERTER 3 PHASE LOGIC SIGNAL	PEAK/DC	18/0	18/0	18/0	18/0	———
16	CCA- INV. PEAK COMM. CURR. - PH. A	PEAK	0	9-11	11-13	12-14	———
17	CCB- INV. PEAK COMM. CURR - PH. B	PEAK	0	9-11	11-13	12-14	———
18	CCC- INV. PEAK COMM. CURR - PH. C	PEAK	0	9-11	11-13	12-14	———
19	SEL- SELECT ON DRIVER BACKPLANE	———	———	———	———	———	———

* READINGS SHOWN ARE FOR 60HZ BASE FREQUENCY SETTING. OTHER READINGS WILL APPLY FOR OTHER BASE FREQUENCIES. ACTUAL FREQUENCIES IN HERTZ IS 5 TIMES METER READING FOR THE 75HZ MAX. FREQUENCY SELECTION AND 10 TIMES THE METER READING FOR THE 150HZ MAX. FREQUENCY SELECTION.

✦ ACTUAL DC LINK VOLTAGE IS 40 TIMES THE METER READING FOR 460 VOLT DRIVES AND 20 TIMES THE METER READING FOR 230 VOLT DRIVES

△ DEPENDENT ON REFERENCE SETTING

PROPRIETARY INFORMATION OF THE GENERAL ELECTRIC COMPANY

SPEED VARIATOR
ERIE PA

36D868822AA

GENERAL ELECTRIC
TITLE ELEMENTARY CARD DIAGRAM
METER CARD
FIRST MADE FOR STANDARD LINE
193X381AAA01

36D868822AA

CARD COVER
BACK VIEW SHOWING LOCATION OF COMPONENTS & WIRING INFORMATION

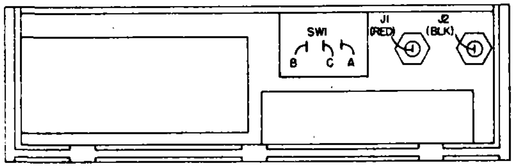

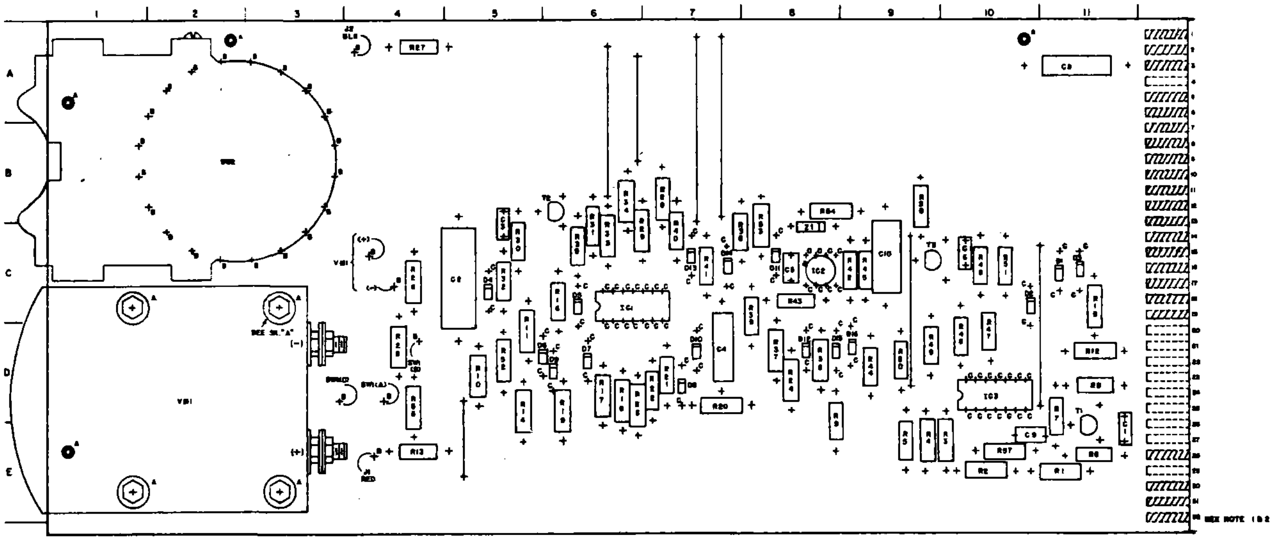

PRINTED CIRCUIT BOARD
FRONT VIEW SHOWING LOCATION OF COMPONENTS & WIRING INFORMATION

HOLE TABULATION

ALL HOLES ARE .040 EXCEPT
THE HOLES TABULATED BELOW.

LOC.	DIA.	QTY.
A	.187	8
B	.062	27
C	.032	69

NOTES

1. INDICATED TAB NUMBERS CORRESPOND TO MATCHING RECEPTACLE NUMBERS.
2. CROSS HATCHED TABS INDICATES TABS USED.
3. CARD SIZE, $11.50^{+.000}_{-.015}$ X $5.130^{+.005}_{-.000}$
4. ALL WIRING IS TERMINATED TO THE PRINTED CIRCUIT ON ONE END. THE OTHER WIRE TERMINATION IS DESIGNATED BY COMPONENT AND TERMINAL NEAR THE PRINTED CIRCUIT BOARD TERMINATION.

TRANSISTOR LEAD SKETCHES

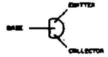

SKETCH FOR T1,T2,T3

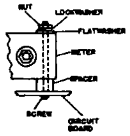

SKETCH "A"
MOUNTING OF METER
TO PRINTED CIRCUIT
BOARD

SPARE UNIT REQUIREMENT		
	FRONT	BACK
	2	—
2X	36B808283AA004	—
SCALE	REAR ETCHED BOARD DWG.	FRONT ETCHED BOARD DWG.

REVISIONS

UNLESS OTHERWISE SPECIFIED USE THE FOLLOWING —
APPLIED PRACTICES — SURFACES ✓

GENERAL ELECTRIC
36D868822AA
FL
2

TITLE PRINTED CIRCUIT DIAGRAM
METER CARD
FIRST MADE FOR AF-400
19BX381AA001

speed variator
ERIE, PA., USA

PROPRIETARY INFORMATION OF THE GENERAL ELECTRIC COMPANY

GENERAL ELECTRIC 36C764166AA

UNLESS OTHERWISE SPECIFIED USE THE FOLLOWING:—

APPLIED PRACTICES	SURFACES	FRACTIONS	DECIMALS	ANGLES
716A516	✓	±	±	±

TITLE **PRINTED CIRCUIT DIAGRAM CURRENT FEEDBACK**

FIRST MADE FOR **AF400**

193X382AA601 — 605

SCHEMATIC DIAGRAM

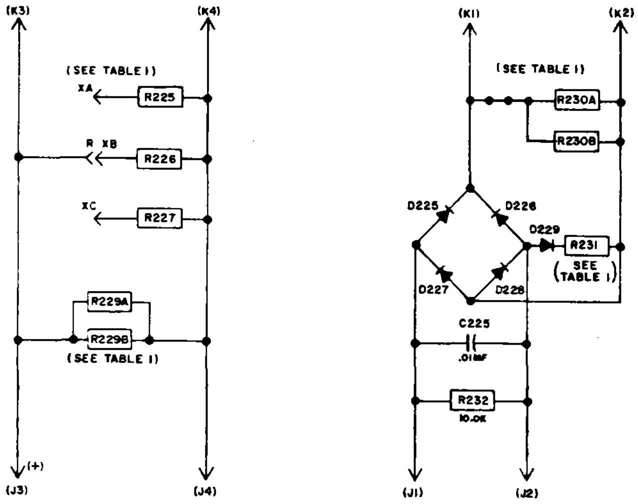

FRONT VIEW SHOWING LOCATION OF COMPONENTS

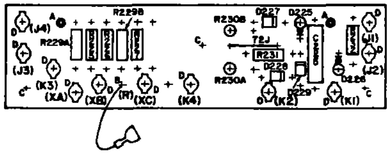

HOLE TABULATION

ALL HOLES .040 DIA. EXCEPT THE HOLES TABULATED BELOW

LOC.	DIA.	QUAR.
A	.157	2
B	.062	1
C	.187	3
D	.101	11

NOTE: 1. CARD SIZE, 4.900 $^{+.000}_{-.015}$ X 1.300 $^{+.000}_{-.015}$

TABLE 1

GROUP NUMBER	RESISTOR NOMENCLATURE AND VALUE IN OHMS							
	XA R225	XB R226	XC R227	R229A	R229B	R230A	R230B	R231
601	1210	121	68.1	68.1	182	100	—	562
602	562	82.5	33.2	27.4	274	100	100	274
603	392	47.5	18.2	12.1	475	33.2	100	150
604	681	56.2	27.4	15.0	562	22.1	68.1	100
605	68.1	27.4	18.2	12.1	150	22.1	27.4	68.1

TABLE 2

GROUP NUMBER	JUMPER SELECTION	RESISTANCE K3 TO K4 OHMS	C.T. TURNS RATIO	NOMINAL INV. RMS AMPS
601 ↓	XA XB XC	47.6 35.2 28.7	2000/1 ↓	42 56 70
602 ↓	XA XB XC	23.8 19.1 14.2	2000/1 ↓	84 105 140
603 ↓	XA XB XC	11.45 9.45 7.16	2000/1 ↓	175 210 280
604 ↓	XA XB XC	14.3 11.6 9.53	4000/1 ↓	280 350 420
605 ↓	XA XB XC	9.62 7.95 6.93	4000/1 ↓	420 500 580

$$\text{VOLTS (K3-K4)} = \frac{\text{INV. RMS AMPS}}{\text{C.T. TURNS RATIO}} \text{ X OHMS (K3-K4)}$$

= 1.0 VOLT RMS NOMINAL

TABLE 3

GROUP NUMBER	RESISTANCE K1 TO K2 OHMS	C.T. TURNS RATIO	COMM. PEAK AMPS
601	100	2000/1	250
602	50	2000/1	500
603	24.9	2000/1	1000
604	16.7	2000/1	1500
605	12.2	2000/1	2050

$$\text{VOLTS (K1-K2)} = \frac{\text{COMM. PEAK AMPS}}{\text{C.T. TURNS RATIO}} \text{ X OHMS (K1-K2)}$$

= 12.5 VOLTS PEAK NOMINAL FOR THE POSITIVE COMMUTATION.

NOTE 2 : FOR THE NEGATIVE COMMUTATION, A MULTIPLIER OF 0.85 IS APPLIED TO THE ABOVE FORMULA DUE TO THE LOADING EFFECT OF R231.

REV NO. 1

SCALE	ETCHED CIRCUIT BOARD DWG.	SPACE UNIT REQUIREMENT	
		FRONT	BACK
FULL	36B605257AA004	—	—

REVISIONS

No revisions are to be made to this drawing without the specific approval of the Development Engineering Section of the Speed Variator Department.

1	JUNE 1, 1977 Baker	CHG. PER. SV-672

PRINTS TO

5Q(BK)5	5(S)
5B(2)22	5D(BK)
5L(BW)5	
5(TS)50	
JA(CD)	
AW(BW)	5(QC)8

AUG. 17, 1976
JAN. 19, 1977

speed variator ERIE, PA.

36C764166AA

PROPRIETARY INFORMATION OF THE GENERAL ELECTRIC COMPANY

GENERAL ELECTRIC 36C764172AA

UNLESS OTHERWISE SPECIFIED USE THE FOLLOWING:—				
APPLIED PRACTICES	SURFACES	TOLERANCES ON MACHINED DIMENSIONS FRACTIONS	DECIMALS	ANGLES
718A515	✓	+ −	+ −	+ −

TITLE **PRINTED CIRCUIT DIAGRAM**
PULSE TRANSFORMER

FIRST MADE FOR AF-400

193X383AAG01

SCHEMATIC DIAGRAM

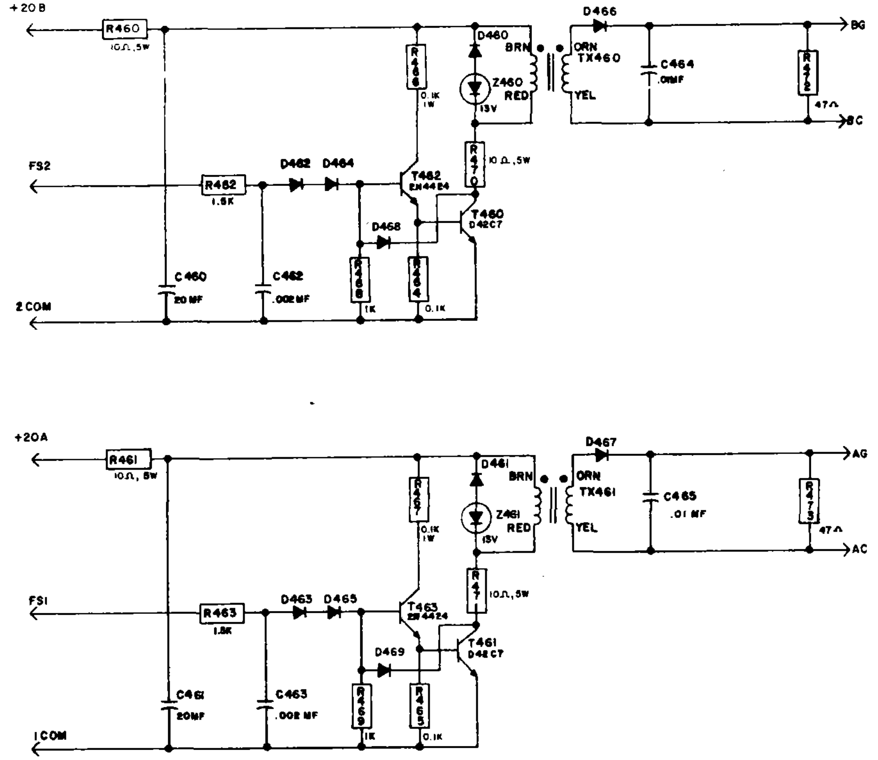

FRONT VIEW SHOWING LOCATION OF COMPONENTS

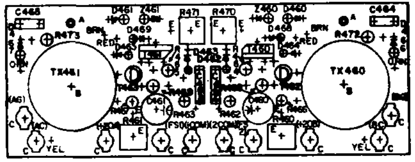

HOLE TABULATION

ALL HOLES .040 DIA.
EXCEPT THE HOLES
TABULATED BELOW

LOC.	DIA.	QUAN.
A	.157	2
B	.187	2
C	.101	10
E	.052	8

NOTE: 1. CARD SIZE $5.130 {}^{+.000}_{-.015}$ X 1.90 ±.020

TRANSISTOR LEAD SKETCHES

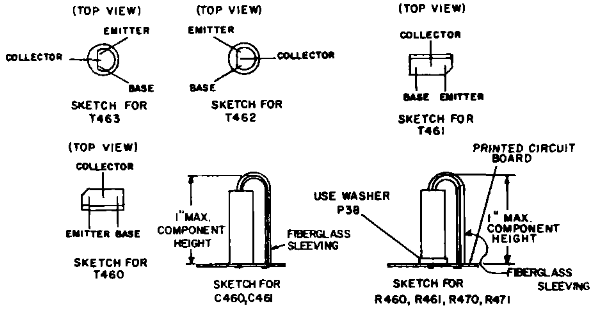

SCALE	ETCHED CIRCUIT BOARD DWG.	SPACE UNIT REQUIREMENT FRONT	BACK
FULL	36B605270AA004	———	———

REVISIONS

No revisions are to be made to this drawing without the specific approval of the Development Engineering Section of the Speed Variator Department.

1	July 22,71	PER SV872 #100	

PRINTS TO	
5OC(BK)5	5B(S)
5B(2)22	5D(BK)
5(TS)50	5L(BW)5
DS(REP)	5AE(BW)
	AW(BW)
	5(OC)8

SPEED VARIATOR 36C764172AA

INSTRUCTIONS

AF-400 INVERTER DRIVES

INVERTER ASSEMBLY (200 KVA) - 331X402AAG01

OPERATION – TROUBLE SHOOTING – REPAIR

GEK-62518

DIAGRAMS

INVERTER ASM	ELEM	36C764880AA
	CONN	36D868886AA
PHASE MODULE	ELEM	36C764878AA
	CONN	36C764882AA
CONVERTER MODULE	ELEM	36C764879AA
	CONN	36C764887AA
COMM. POWER SUPPLY	ELEM	36C764881AA
	CONN	36D868890AA

GENERAL ELECTRIC

GENERAL ELECTRIC 36C764880AA

UNLESS OTHERWISE SPECIFIED USE THE FOLLOWING:—

APPLIED PRACTICES	SURFACES	TOLERANCES ON MACHINED DIMENSIONS FRACTIONS	DECIMALS	ANGLES
	✓	±	±	±

TITLE ELEMENTARY DIAGRAM
AF-400 INVERTER ASM

FIRST MADE FOR AF-400

331X401, 402, 403AA

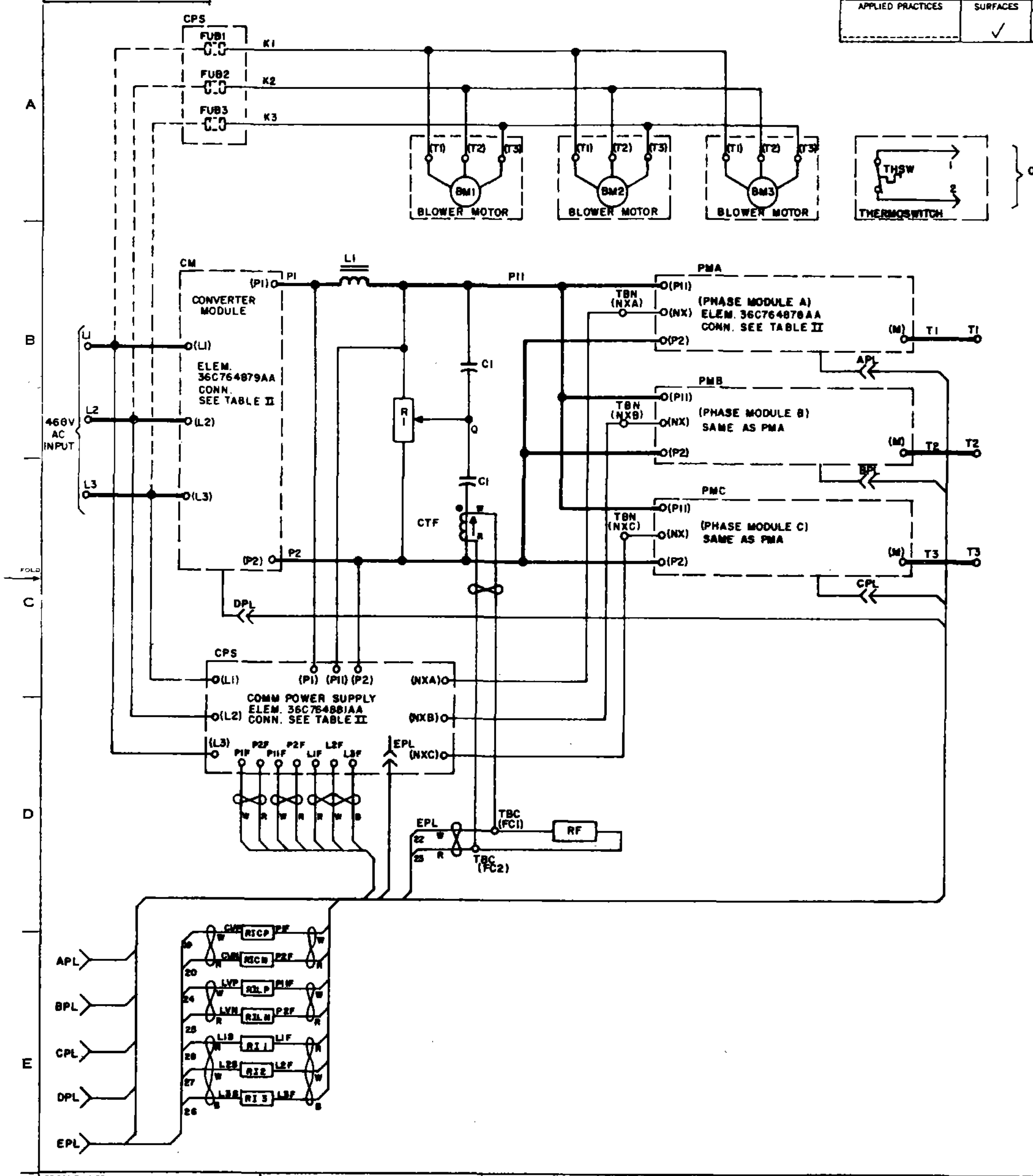

NOTES:

1. THE ASSEMBLY CATALOG NUMBER GROUP DISTINCTION, MODULE CATALOG NUMBERS AND SOME COMPONENT VALUES ARE DEPENDENT UPON KVA RATING. TABLE I LISTS VARIABLE COMPONENT VALUES.
2. THE L1 CHOKE IS MOUNTED REMOTE TO THE INVERTER ASSEMBLY. ITS VALUE IS DEPENDENT UPON KVA RATING AND IS LISTED IN TABLE I.
3. ELEMENTARY WIRING SYMBOLS
   - W R — INDICATES TWISTED WIRES, COLOR INDICATED BY LETTER.
   - 1 2 3 — INDICATES CABLE ASSEMBLY, NUMBERS ARE POINTS IN CONNECTOR PLUG.
   - →)— — QUICK DISCONNECT "STAB-ON" CONNECTION.
   - ● — DOT INDICATES POSITIVE TERMINAL WHEN CURRENT FLOWS IN THE DIRECTION OF THE ARROW.
4. *REFER TO THE CONNECTION DIAGRAM FOR A PHYSICAL REPRESENTATION OF THIS ASSEMBLY.*
5. RESISTORS RIC, RIL, RI1, RI2, RI3 ARE, RESISTANCE ISOLATOR RESISTORS, AND ARE MOUNTED AS AN INTEGRAL PART OF THE WIRE HARNESS.
6. BM1, BM2, BM3 USED ON 300/400 KVA
   BM1, BM2 USED ON 200 KVA
   BM1 USED ON 100/50KVA
7. SEE TABLE II FOR CONNECTION DIAGRAMS.
8. TABLE I

KVA	331X	L1	C1//C1	C1	R1	RF
		μH	μF	μF	OHM/W	OHM
400	401AAG01	400	22400	44800	1000/800	8.3 4X33.2Ω IN PAR.
300	401AAG02	530	16800	33600	1500/400	11 3X33.2Ω IN PAR.
200	402AAG01	800	11200	22400	1500/400	16.6 2X33.2Ω IN PAR.
100	403AAG01	1600	5600	11200	2500/200	16.6 2X33.2Ω IN PAR
50	403AAG02	3200	2800	5600	2500/200	33.2Ω

TABLE II

KVA	PHASE MODULE	CONVERTER MODULE	INVERTER ASSEMBLY	COMM. P/S
400/300	36C764882AA	36C764887AA	36D868885AA	36D868889AA
200/	36C764883AA	36C764888AA	36D868886AA	36D868890AA
100/50	36C764884AA	36C764889AA	36D868887AA	36D868891AA

REVISIONS

No revisions are to be made to this drawing without the specific approval of the Development Engineering Section of the Speed Variator Department.

1. May 30, 1977

PRINTS TO	
5B(2)22	5(S)
5QC(BK)5	5D(BK)
5(TS)50	5LB(W)5
AW(BW)	5AE(BW)
DS(REP)	5QC(B)

MADE BY M. Pozh AUG. 17, 1976
J.C. Williams Jan. 31, 1977

APPROVALS

SPEED VARIATOR DIV OR DEPT
ERIE, PA LOCATION

36C764880AA CONT ON SHEET SH NO.

PF-809-F (9-75) PRINTED IN U.S.A.

3.2.4-95

INVERTER ASM WIRING - 200 KVA	
WIRE NO.	CONNECTION
	BUS BAR - 1/4" X 1"
L1	PTB(L1), CM(L1)
L2	PTB(L2), CM(L2)
L3	PTB(L3), CM(L3)
	#2/0 BLK-SILICONE
P1	1L1(1), CM(P1)
P2	CM(P2), PHA(P2), PHB(P2), PHC(P2)
P11	2L1(2), PHA(P11), PHB(P11), PHC(P11)
T1	PTB(T1), PHA(M)
T2	PTB(T2), PHB(M)
T3	PTB(T3), PHC(M)
	#4 BLK-SILICONE
P1	1L1(1), 2L1(1)
P11	1L1(2), 2L1(2)
	#6 BLK-SILICONE
P2	1C1(P2), PHC(P2)
P2	2C1(P2), PHC(P2)
P11	1C1(P11), PHC(P11)
P11	2C1(P11), PHC(P11)
	#14 BLK
L1	BUS(L1), FUB1(2)
L2	BUS(L2), FUB2(2)
L3	BUS(L3), FUB3(2)
K1	FUB1(1), BM1(T1), BM2(T1)
K2	FUB2(1), BM1(T2), BM2(T2)
K3	FUB3(1), BM1(T3), BM2(T3)
[illegible]	[illegible]
[illegible]	[illegible]
[illegible]	[illegible]
P1	[illegible]
P2	[illegible]
P11	[illegible]
	RESISTOR WIRES
[illegible]	[illegible]
[illegible]	[illegible]
[illegible]	[illegible]
[illegible]	[illegible]
[illegible]	[illegible]
[illegible]	[illegible]
[illegible]	[illegible]
	PLUG WIRING
APL	DRIVER(APL), PHA(APL)
BPL	DRIVER(BPL), PHB(BPL)
CPL	DRIVER(CPL), PHC(CPL)
DPL	DRIVER(DPL), CM(DPL)
EPL	DRIVER(EPL), CPS(EPL)
[illegible]	DRIVER(FPL), TBC(FC1)
[illegible]	DRIVER(FPL), TBC(FC2)

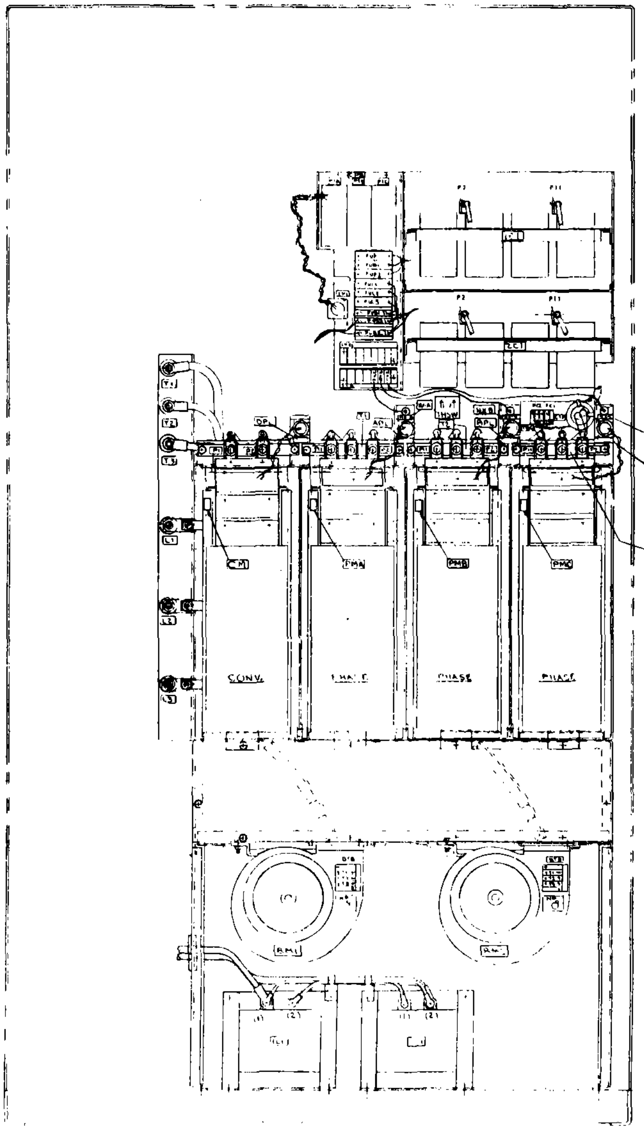

GENERAL ELECTRIC

INVERTER CONNECTION DIAG

FIRST MADE FOR AE400 FOR 200 KVA

36D868886AA

36D868886AA

2	3	4	5

UNLESS OTHERWISE SPECIFIED USE THE FOLLOWING:—

APPLIED PRACTICES	SURFACES	TOLERANCES ON MACHINED DIMENSIONS FRACTIONS	DECIMALS	ANGLES
	✓	±	±	±

GENERAL ELECTRIC

36C764878AA

CONT ON SHEET SH NO.

TITLE ELEMENTARY DIAGRAM
AF-400 PHASE MODULE

FIRST MADE FOR AF-400
331X411, 412, 413AA

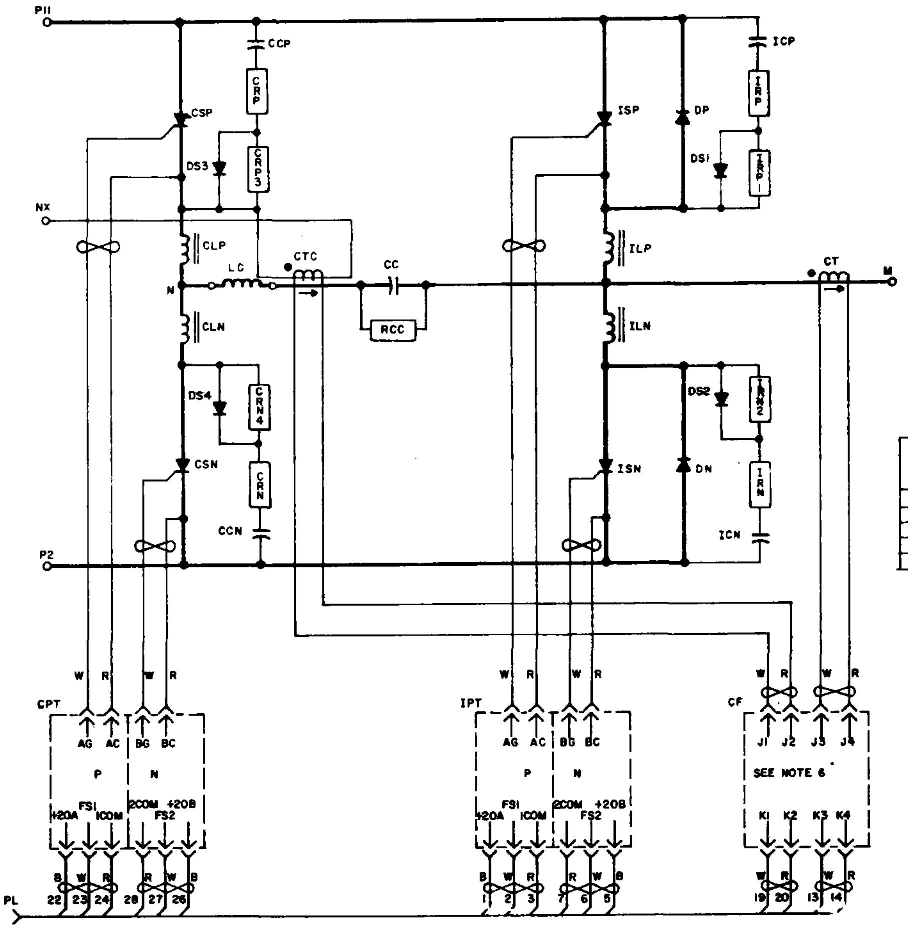

NOTES

1. THIS DIAGRAM IS FUNCTIONALLY NOMENCLATED WITH PREFIXES OF I OR C TO INDICATE INVERTER OR COMMUTATION SECTION. SUFFIXES OF P OR N INDICATE POSITIVE OR NEGATIVE. THE BASIC NOMENCLATURE IS:

C — CAPACITOR
D — DIODE
L — CHOKE
PT — PULSE TRANSFORMER PRINTED CIRCUIT CARD
PL — CONNECTOR PLUG
R — RESISTOR
S — SCR
DS — SNUBBER DIODE

2. PULSE TRANSFORMER CARD CIRCUITRY IS NOT SHOWN FOR SIMPLICATION. FOR DETAILS REFER TO THE INSTRUCTION BOOK.

3. ELEMENTARY WIRING SYMBOLS

—INDICATES TWISTED WIRES, COLOR INDICATED BY LETTER.

—INDICATES CABLE ASSEMBLY, NUMBERS ARE POINTS IN CONNECTOR PLUG.

—QUICK DISCONNECT "STAB-ON" CONNECTION.

-DOT INDICATES POSITIVE TERMINAL WHEN CURRENT FLOWS IN THE DIRECTION OF THE ARROW.

4. REFER TO THE CONNECTION DIAGRAM FOR A PHYSICAL REPRESENTATION OF THIS ASSEMBLY.

5.

KVA	331X	CC	LC	IRP, CRP IRN, CRN	IRP1, CRP3 IRN2, CRN4	ICP, CCP ICN, CCN	ILP ILN	CLP CLN	RCC
		μF	μH	OHM/W	OHM/W	μF	SAT μH	SAT μH	K OHM /W
400	411AAG01	80	5	2.5/40	20/40	1	1.5	1.5	280/4
300	411AAG02	60	7.5	2.5/40	20/40	1	2	2	280/4
200	412AAG01	40	10	2.5/40	20/40	1	2.6	2.6	560/2
100	413AAG01	20	25	10/40	20/40	.25	4	4	560/2
50	413AAG02	10	53	10/40	20/40	.25	8	8	1000/2

6. THE CURRENT FEEDBACK CARD WILL CHANGE DEPENDING ON KVA RATING. GROUP OF CARD AND JUMPER SELECTION FOR NOMINAL CURRENT ARE–

KVA	CF 193X382AA	NOMINAL INV. CURRENT A RMS	JUMPER SELECTION	NOMINAL COMM. CURRENT A PEAK
400	G05	580 500 420	XC XB XA	2100
300	G04	420 350 280	XC XB XA	1500
200	G03	280 210 175	XC XB XA	1000
100	G02	140 105 84	XC XB XA	500
50	G01	70 56 42	XC XB XA	250

REVISIONS

No revisions are to be made to this drawing without the specific approval of the Development Engineering Section of the Speed Variator Department

1

PRINTS TO

5B(Z)22	5(S)
5QC(B)05	5D(BK)
5(TS)50	5LB(W)5
AW(BW)	5AE(BW)
DS(REP)	5QC(B)

AUG 6, 1976

SPEED VARIATOR
ERIE, PA

36C764878AA

CONT ON SHEET SH NO.

REV NO.

GENERAL ELECTRIC

36C764882AA

UNLESS OTHERWISE SPECIFIED USE THE FOLLOWING —				
APPLIED PRACTICES	SURFACES	TOLERANCES ON MACHINED DIMENSIONS FRACTIONS	DECIMALS	ANGLES
	✓	±	±	±

TITLE **CONNECTION DIAGRAM**
200/400/300 KVA PHASE MODULE
FIRST MADE FOR **AF-400**
331X411AAG01 , 331X412DAG01

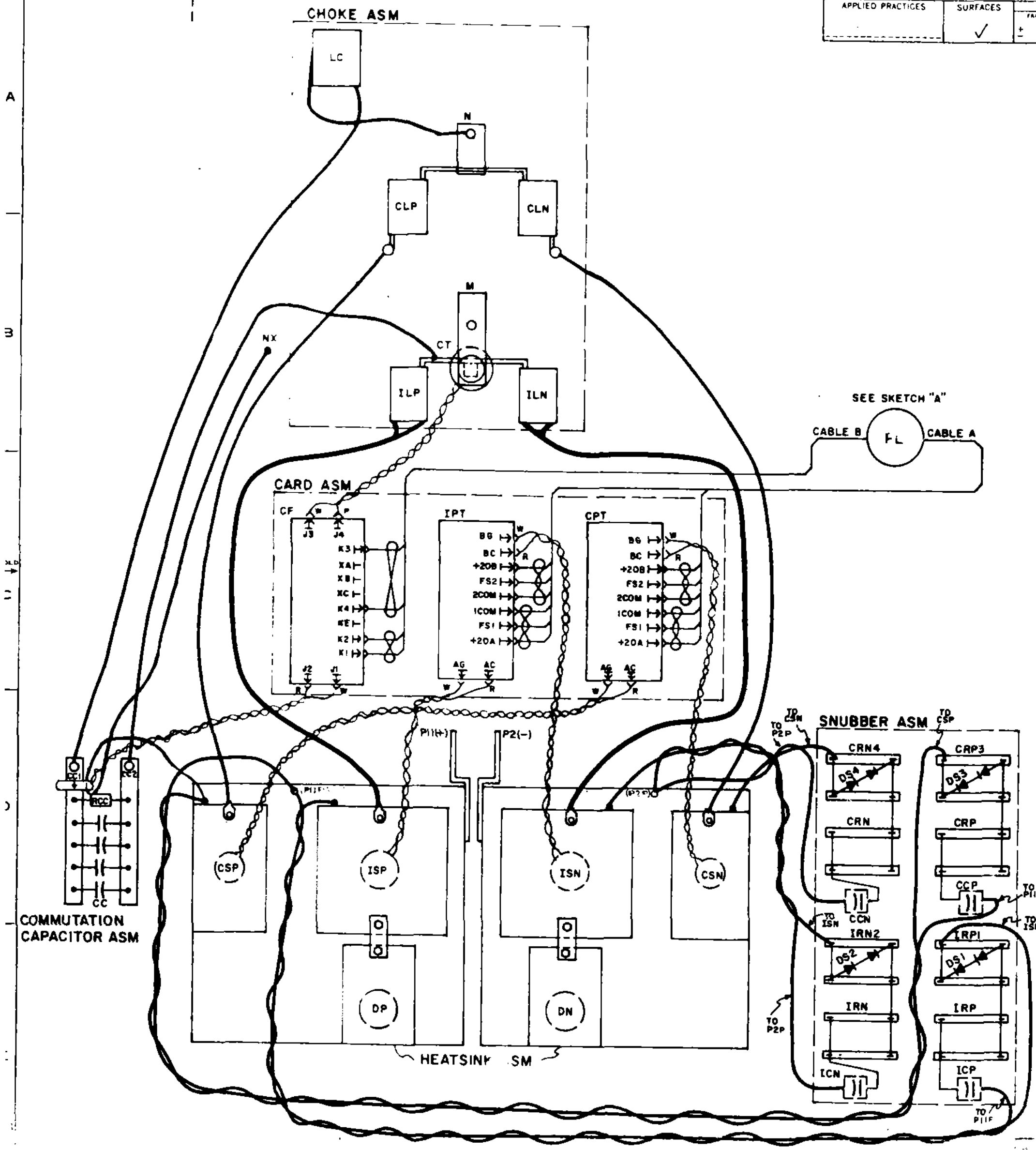

REF TO WIRE CHART
36A358012XBG01

VIEW FROM WIRE SIDE OF PLUG SOCKET

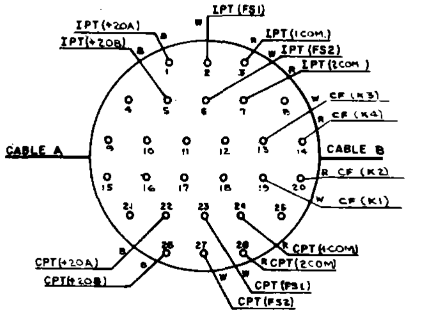

SKETCH "A"

NOTES.

1. ALL POWER WIRING IS EITHER BUS OR CONNECTORS PER MECHANICAL ASSEMBLY DRAWING.
2. WIRES ARE MARKED AS INDICATED.
   AC, AG ; BC & BG ARE TWISTED PAIRS OF #20 AWG RED & WHITE. GATES (G) ARE WHITES.
   TWISTED RED, WHITE AND BLUE WIRES, TO PULSE TRANSFORMER CARDS, ARE #20 WIRES
   TWISTED RED & WHITE WIRES TO CURRENT FEEDBACK CARD ARE #20 AWG.
3. ALL OTHER CONTROL WIRES ARE #16 AWG RED, EXCEPT AS OTHERWISE INDICATED.

REVISIONS

No revisions are to be made to drawing without the specific approval of the Development Engineering Section of the Speed Variator Department

1	Feb 25 1977 [illegible]	[illegible]
[illegible]		
2	[illegible]	PER SV-930 # 3

PRINTS TO	
SB(2)22	5(S)
5QC(BK)5	50(BK)
5(TS)50	5L(BW)5
AW(BW)	5AE(BW)
DS(REP)	5QC(B)

SPEED VARIATOR
ERIE, PA

36C764882AA

GENERAL ELECTRIC 36C764879AA

UNLESS OTHERWISE SPECIFIED USE THE FOLLOWING:—

APPLIED PRACTICES	SURFACES	FRACTIONS	DECIMALS	ANGLES
	✓	±	±	±

TITLE ELEMENTARY DIAGRAM
AF-400 CONVERTER MODULE
FIRST MADE FOR STANDARD LINE
331X421,422,423AA

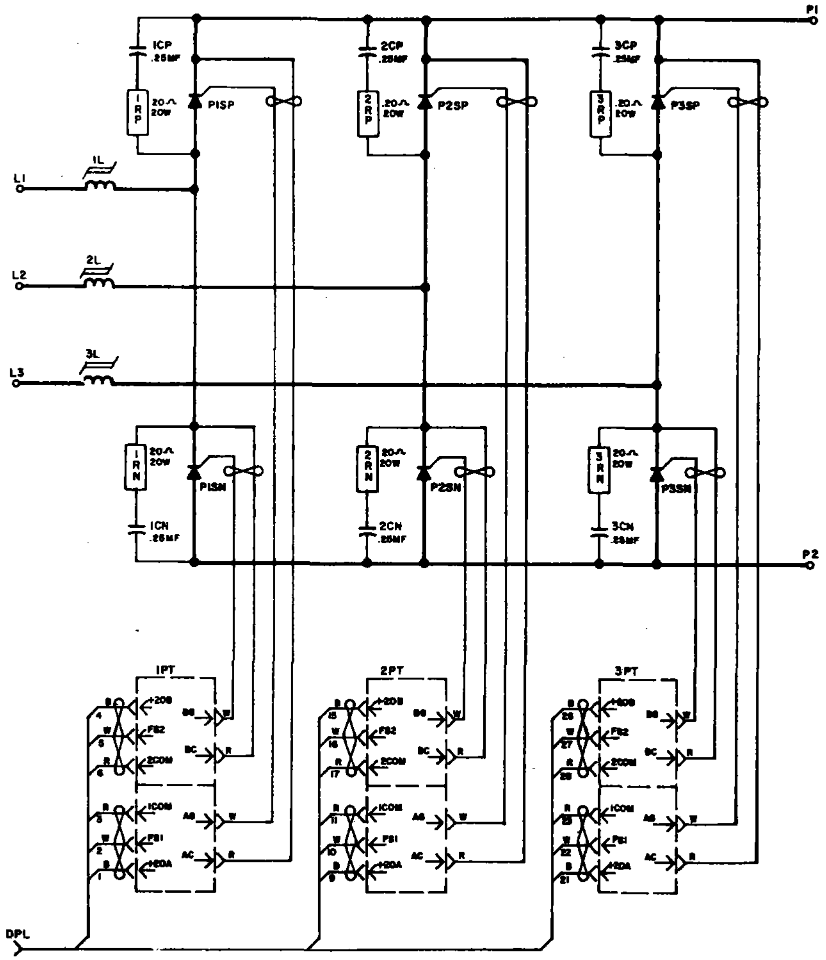

NOTES

1. THIS DIAGRAM IS FUNCTIONALLY NOMENCLATED WITH PREFIXES P1, P2 ETC., TO INDICATE PHASE CONTROL AND PHASE. SUFFIXES OF P OR N INDICATE POSITIVE OR NEGATIVE. BASIC NOMENCLATURE IS:
   - C — CAPACITOR
   - D — DIODE
   - L — CHOKE
   - PT — PULSE TRANSFORMER PRINTED CIRCUIT CARD
   - PL — CONNECTOR PLUG
   - R — RESISTOR
   - S — SCR
   - X — AUXILIARY SCR
2. PULSE TRANSFORMER CARD CIRCUITRY IS NOT SHOWN FOR SIMPLIFICATION. FOR DETAILS REFER TO THE INSTRUCTION BOOK.
3. ELEMENTARY WIRING SYMBOLS

— INDICATES TWISTED WIRES, COLORS INDICATED BY LETTER

— INDICATES CABLE ASSEMBLY, NUMBERS ARE POINTS IN CONNECTOR PLUG PL.

— QUICK DISCONNECT "STAB ON" CONNECTION

4. REFER TO THE CONNECTION DIAGRAM FOR A PHYSICAL REPRESENTATION OF THIS ASSEMBLY.
5. 1L, 2L, 3L; 3 FERRITE CORES 1 TURN

REV NO.
0

REVISIONS

No revisions are to be made to this drawing without the specific approval of the Development Engineering Section of the Speed Variator Department.

PRINTS TO	
5B(2)22	5(S)
5QC(BK)5	5DD(BK)
5(TS)50	5L(BW)5
AW(BW)	5AE(BW)
DS(REP)	5QC(B)

MADE BY M B Pazzola AUG. 24, 1976
D F Williams Jr. 31 1977
APPROVALS EAS
SPEED VARIATOR
ERIE, PA
36C764879AA

PF-809-F (9-75)
PRINTED IN U.S.A.

GENERAL ELECTRIC 36C764887AA

UNLESS OTHERWISE SPECIFIED USE THE FOLLOWING:—				
APPLIED PRACTICES	SURFACES	TOLERANCES ON MACHINED DIMENSIONS FRACTIONS	DECIMALS	ANGLES
	✓	±	±	±

TITLE CONNECTION DIAGRAM
400 / 300 KVA CONVERTER MODULE

FIRST MADE FOR AF-400

331X421AAG01

REF TO WIRE CHART 36A35B012XC G01

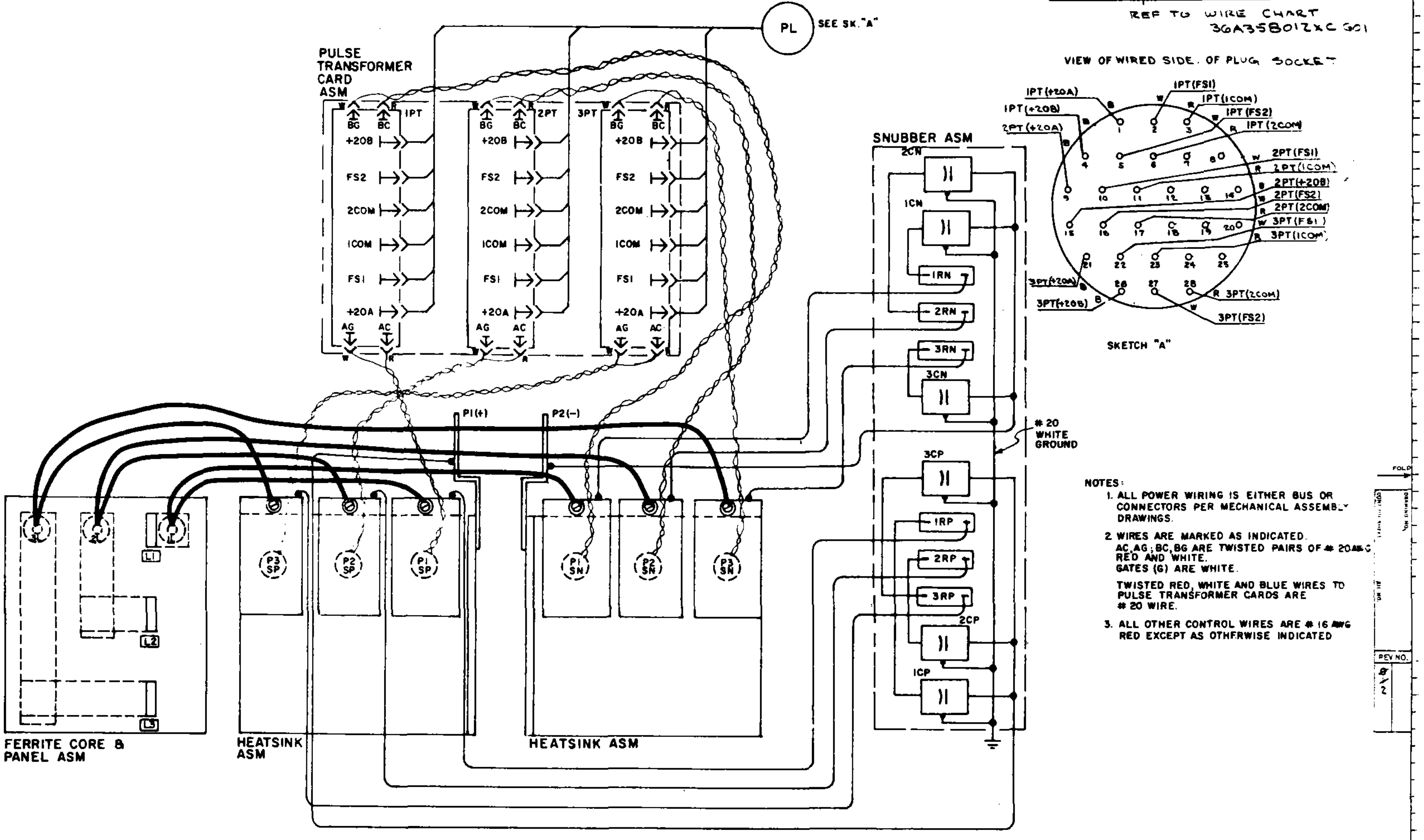

NOTES:

1. ALL POWER WIRING IS EITHER BUS OR CONNECTORS PER MECHANICAL ASSEMBLY DRAWINGS.
2. WIRES ARE MARKED AS INDICATED.
   AC, AG; BC, BG ARE TWISTED PAIRS OF # 20AWG RED AND WHITE.
   GATES (G) ARE WHITE.

   TWISTED RED, WHITE AND BLUE WIRES TO PULSE TRANSFORMER CARDS ARE # 20 WIRE.
3. ALL OTHER CONTROL WIRES ARE # 16 AWG RED EXCEPT AS OTHERWISE INDICATED

REVISIONS

No revisions are to be made to this drawing without the specific approval of the Development Engineering Section of the Speed Variator Department.

1	M B Pazha	SEPT. 22 1976	[illegible]
2	[illegible]	FEB 25 1977	Revise CHG
CHG'D SK A TO WIRE SIDE VIEW			

PRINTS TO	
5B(2)22	5(S)
5QC(B)45	5Q(BK)
5(TS)50	5L(BW)5
AW(BW)	5AE(BW)
DS(REP)	5QC(B)

REV NO. 8 / 2

PROPRIETARY INFORMATION OF THE GENERAL ELECTRIC COMPANY

MADE BY M B Pazha MAY 12, 1976
ISSUED MAY 26 1976
APPROVALS R EHS
SPEED VARIATOR DIV OR DEPT
ERIE, PA LOCATION
36C764887AA CONT ON SHEET

FF-609-F (8-79)
PRINTED IN U.S.A.

GENERAL ELECTRIC 36C 4881AA

UNLESS OTHERWISE SPECIFIED USE THE FOLLOWING.—

APPLIED PRACTICES	SURFACES	TOLERANCES ON MACHINED DIMENSIONS FRACTIONS	DECIMALS	ANGLES
	✓	±	±	±

TITLE **ELEMENTARY DIAGRAM**
COMMUTATION POWER SUPPLY

FIRST MADE FOR AF-400

331X431AAG01

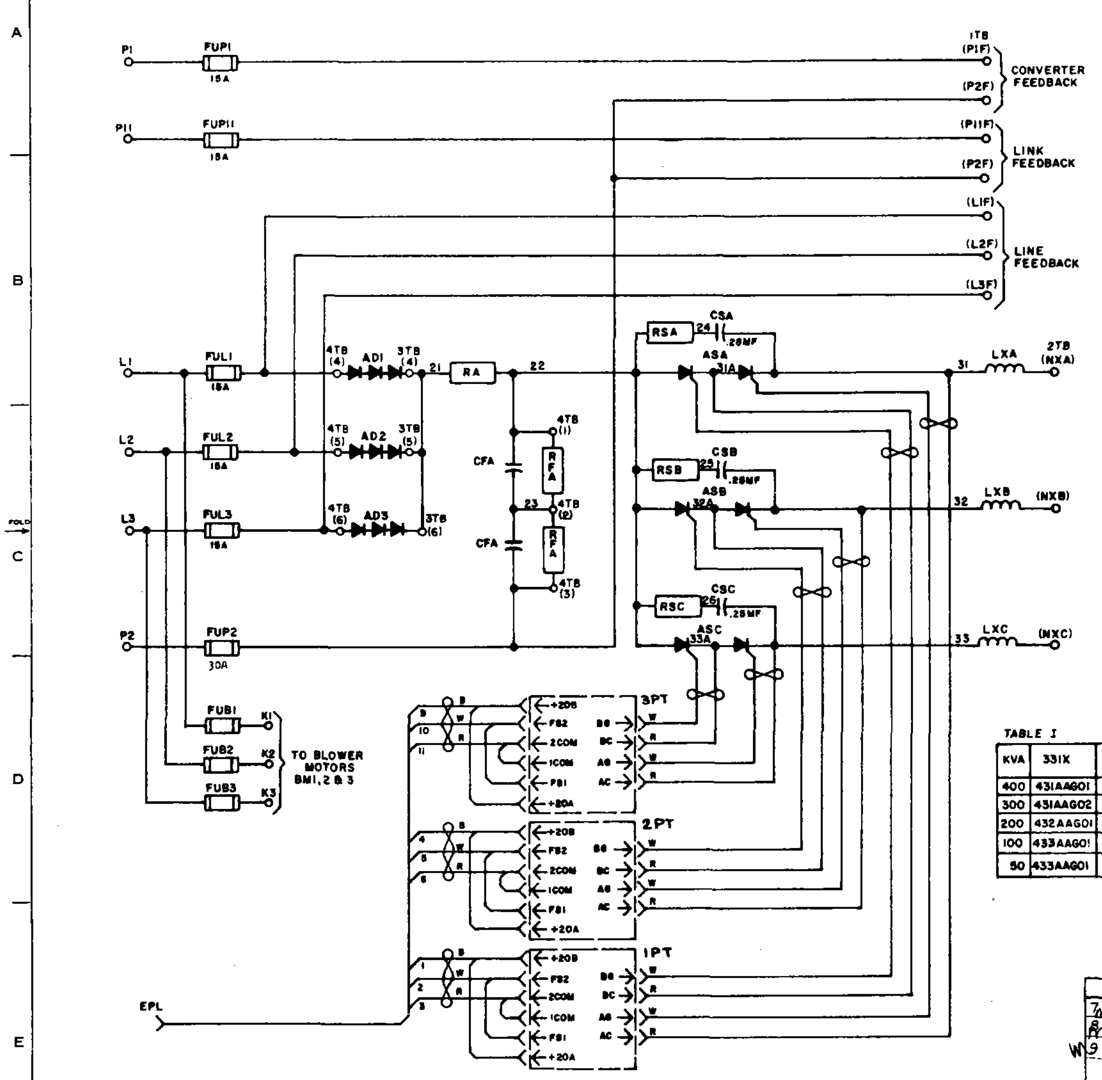

TABLE I

KVA	331X	LX µH	CFA µF	RA OHMS/W	RFA OHM/CONN/W	RSA OHM/CONN/W	FUB1-3 500V AMP	~~FUP2 600V AMP~~
400	431AAG01	54	1400	5/100	9.4K/2 X 4.7K SER/20	100/2 X 200 PAR/40	6.0A	~~30A~~
300	431AAG02	54	1400	5/100	"	"	6.0A	~~30A~~
200	432AAG01	110	850	10/50	"	200/2X100 SER/40	3.2A	~~15A~~
100	433AAG01	220	850	10/50	"	400/2X200 SER/40	1.6A	~~15A~~
50	433AAG01	"	850	10/50	"	"	1.6A	~~15A~~

REV NO.

PROPRIETARY INFORMATION OF THE GENERAL ELECTRIC COMPANY

REVISIONS

7	FEB 20, 1980	PER SV874#52	
8	MAR 20, 1980	PER SV874#56	
9	MAY 12, 1980	PER SV874#60	
1	FEB 7, 1977	SV872 #12A	
2	NOV 7, 1977 G.R. Baker	PER SV-872 #13A	
3	JAN 31, 1978	SV872 #20	
4	m Cotty June 21, 78	PER / E SV-878 #8	
5	JAN 7, 1980	PER SV874#48	CHG MARKING 1PT WAS PTA 2PT WAS PTB 3PT WAS PTC
6	FEB 8, 1980	PER SV874#50	

No revisions are to be made to this drawing without the specific approval of the Development Engineering Section of the Speed Variator Department

PRINTS TO

SB(8)W	SJ(8W)
SR(2)BW	T6(50)
SL(2)BW	
AW(BW)	
SD(CD)	
JA(CD)	

MADE BY M E Coyle AUG 25, 1976
ISSUED OCT 19, 1976
APPROVALS

SPEED VARIATOR DIV OR DEPT
ERIE, PA LOCATION

36C764881AA
CONT ON SHEET SH. NO.

GENERAL ELECTRIC 36D868890AA

TITLE CONNECTION ― ~~45.0~~

COMMUTATION POWER SUPPLY

FIRST MADE FOR 44400

~~[illegible]~~ 200 KVA 35 X 4 4 3 2 A A 6 ~~[illegible]~~

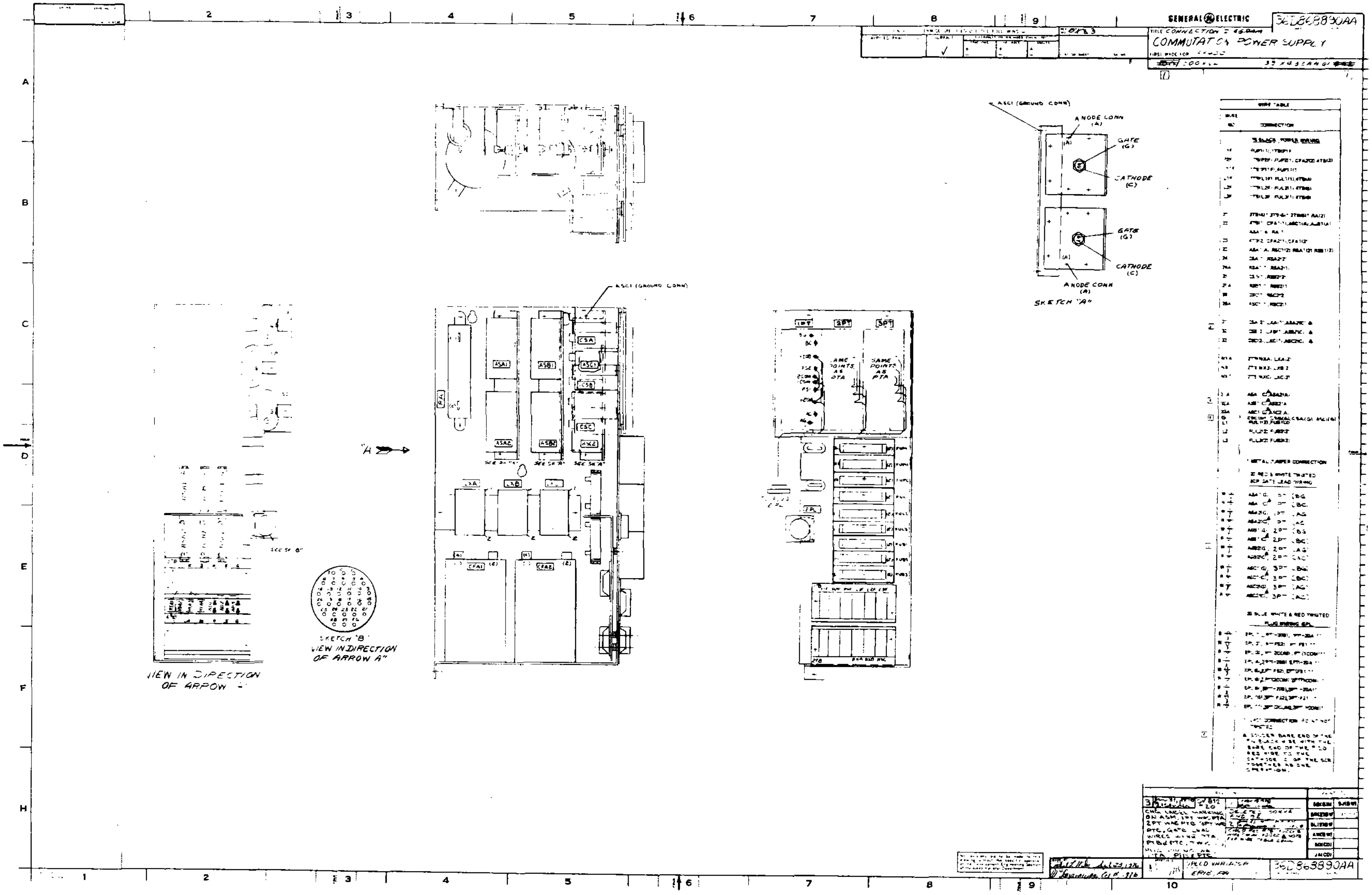

INSTRUCTIONS

GEK–24940

AMPLIFIER CARD, 193X256A_G01

GENERAL ELECTRIC

INSTRUCTION

AMPLIFIER CARD, 193X256A_G01

1.0 GENERAL

This instruction provides the basic information required to start–up and troubleshoot the Amplifier Card. Refer to the system diagrams to determine how the card is used in the overall system.

2.0 DESCRIPTION

2.01 This card contains: Six operational amplifiers, OA1–OA6 for general purpose use. OA1 and OA2 contain adjustable output clamps. 1LIM+ will limit the positive voltage excursion of OA1, 1LIM– limits the negative voltage excursion of OA1. 2LIM+ and 2LIM– limit the output of OA2.

2.02 Four potentiometers P801, P802, P803 and P804 are provided.

2.03 Two diode networks are provided.

3.0 START–UP/CHECKOUT

There are 4 limit and 4 potentiometer adjustments which may be made on this card. Refer to the system diagram for settings.

4.0 TROUBLESHOOTING

4.01 As an aid to troubleshooting, a brief description of an operational amplifier follows,

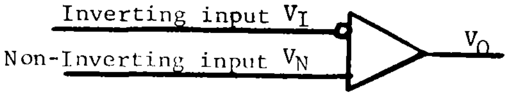

The output voltage is approximately 20,000 times the difference between the voltage on the non–inverting input and the inverting input, i.e., $V_O = 20{,}000 \times (V_N - V_I)$. As long as the output voltage is not in clamp or saturation, the difference between V_N and V_I is essentially zero. It should be noted that the voltage to common of the inputs has no affect on the output.

A bias current will flow into each

4.01 (continued)

A bias current will flow into each input. This current is constant and is approximately 1/2 microamp. Each input must be connected to provide a path for this current. For an op amp connected as shown below –

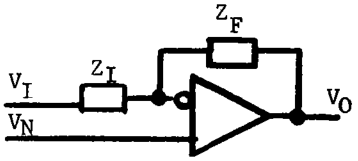

$$V_O = V_N + \frac{Z_F}{Z_I} (V_N - V_I)$$

The output of an op amp is short circuit–proof and will swing a minimum of ±10 volts with a 2K ohm resistive load. Capacitive loads will cause oscillation unless driven by the buffered output of OA3 or OA4 (tabs 12 and 9X).

4.02 Check that ±20V is applied to the card.

4.03 Check that the output clamps are not set too low or that the connected load is not less than 2000 ohms.

4.04 Analyze the input/output to determine if the input signal is improper or if the amplifier is defective.

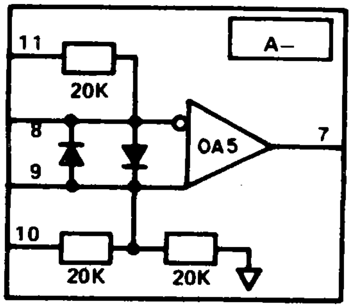
A–
11
20K
8
9
OA5
7
10
20K
20K

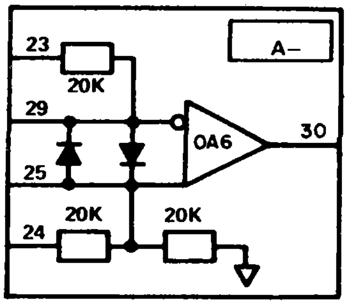
A–
23
20K
29
OA6
30
25
20K
20K
24

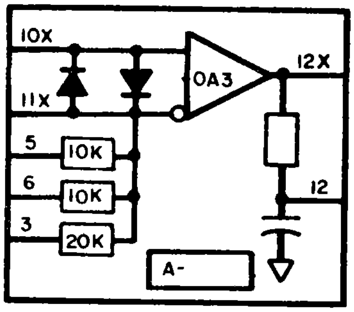
10X
OA3
12X
11X
5
10K
6
10K
12
3
20K
A-

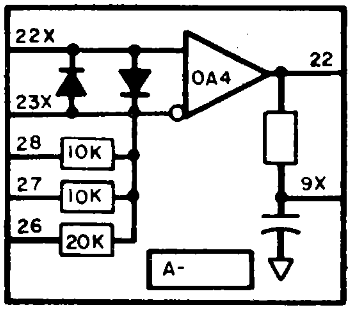
22X
OA4
22
23X
28
10K
27
10K
9X
26
20K
A-

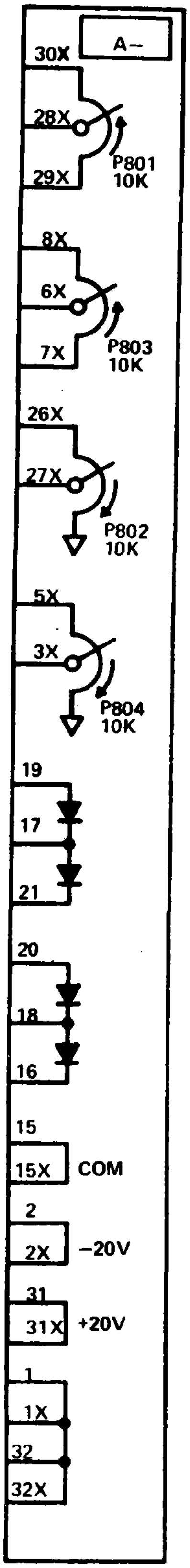
A–
30X
28X
29X
P801
10K
8X
6X
7X
P803
10K
26X
27X
P802
10K
5X
3X
P804
10K
19
17
21
20
18
16
15
15X
COM
2
2X
–20V
31
31X
+20V
1
1X
32
32X

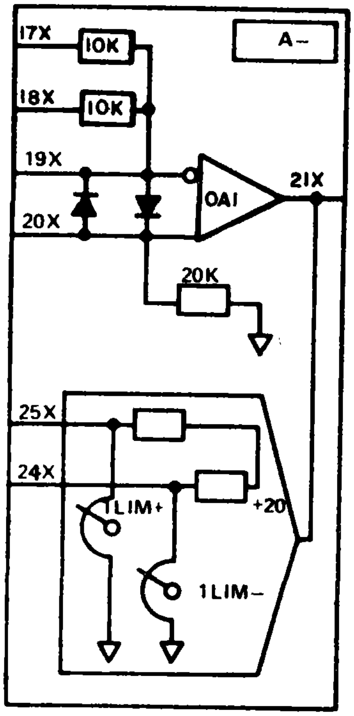
17X
10K
A–
18X
10K
19X
OA1
21X
20X
20K
25X
24X
1LIM+
+20
1LIM–

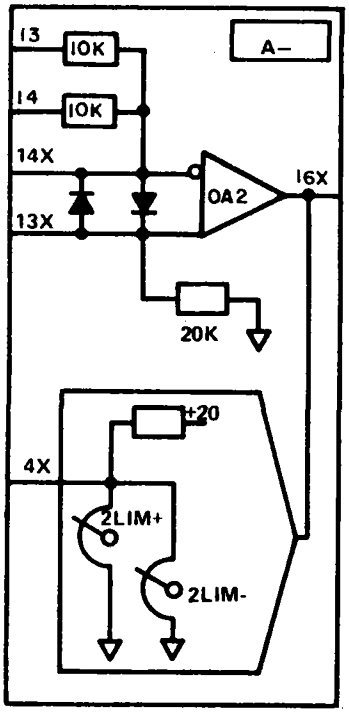
13
10K
A–
14
10K
14X
OA2
16X
13X
20K
+20
4X
2LIM+
2LIM-

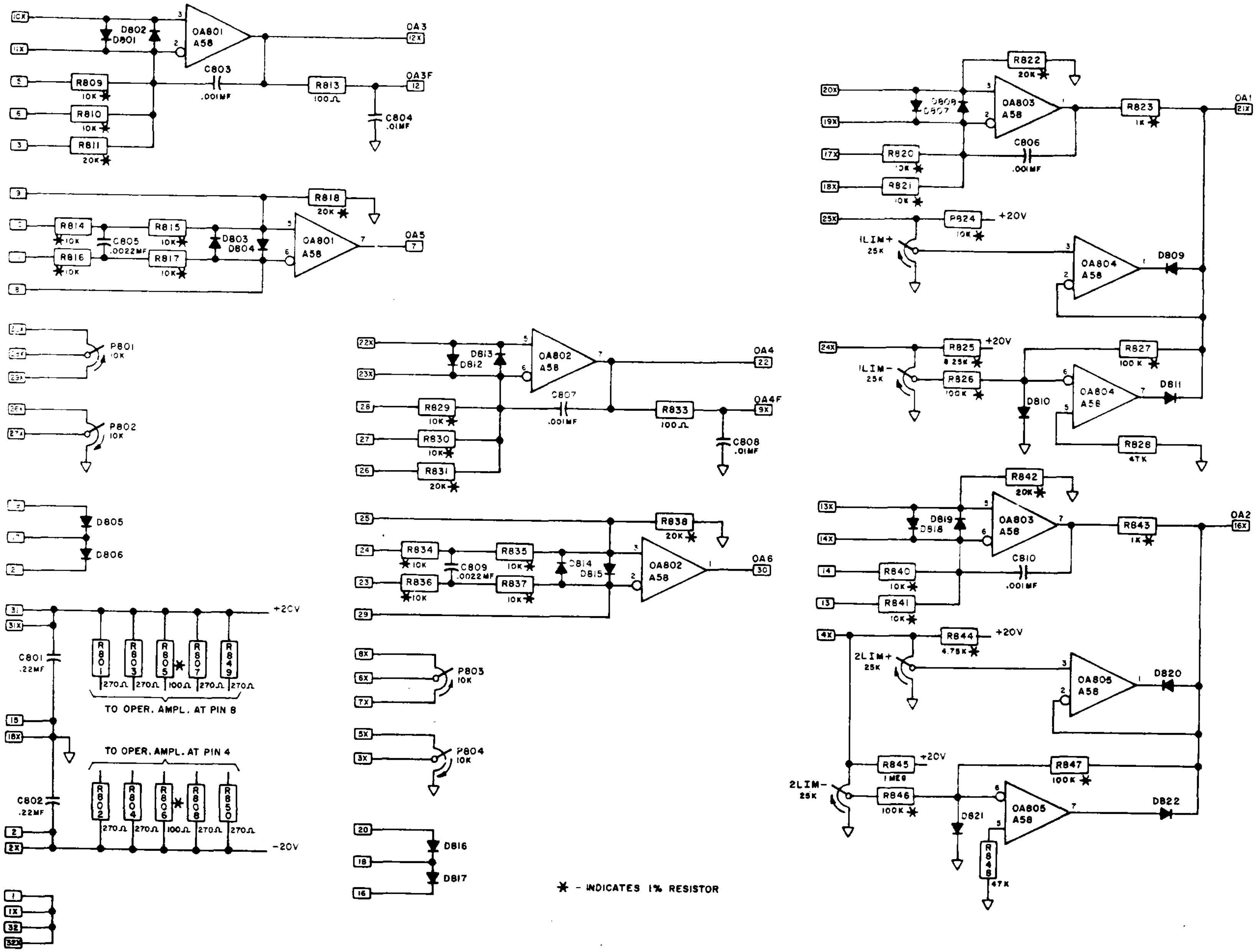

✱ - INDICATES 1% RESISTOR

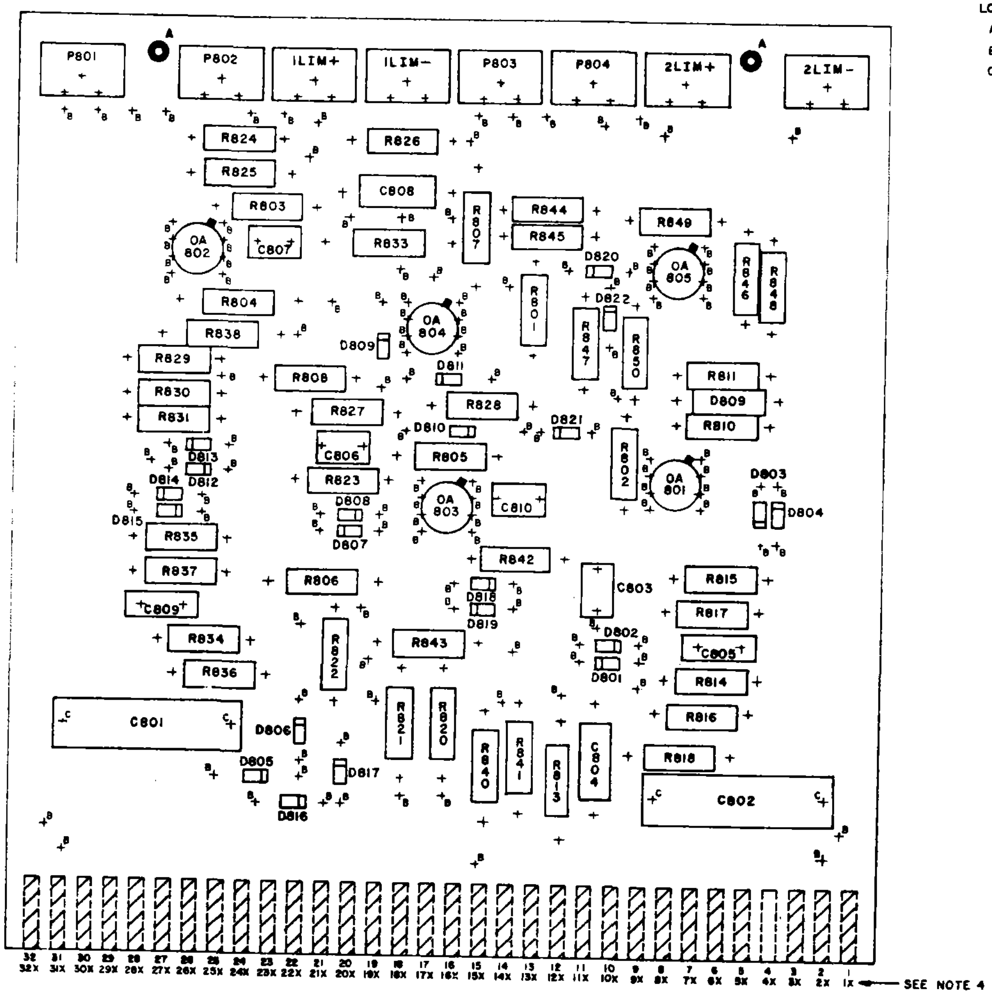

SEE NOTE 1 & 2

GROUP	KEY LOCATIONS			
01	12-13	19-20	30-31	

HOLE TABULATION

ALL HOLES .040 DIA. EXCEPT THE HOLES TABULATED BELOW

LOC.	DIA.	QUAN.
A	.157	2
B	.032	127
C	.052	4

NOTES

1. INDICATED TAB NUMBERS CORRESPOND TO MATCHING RECEPTACLE NUMBERS
2. CROSS HATCHED TABS INDICATES TABS USED.
3. CARD SIZE, $5.500^{+.000}_{-.015}$ X $5.130^{+.002}_{-.008}$
4. THIS CARD HAS GOLD PLATED TABS ON BOTH SIDES. TABS 1 THRU 32 ARE LOCATED ON THE REVERSE SIDE. TABS 1X THRU 32X ARE LOCATED ON THE COMPONENT SIDE OF THE CARD. TAB 1X IS OPPOSITE TAB 1 AND ETC. THE TAB NUMBERS SHOWN ARE THOSE USED ON THIS CARD.
5. ALL OP AMPS SHALL BE MOUNTED TO A .50 INCH MAXIMUM ABOVE THE CARD SURFACE.

OP AMP LEAD SKETCH

(TOP VIEW)

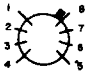

SKETCH FOR
OA801, OA802, OA803,
OA804, OA805

GENERAL ELECTRIC COMPANY — DIRECT CURRENT MOTOR & GENERATOR PRODUCTS DEPARTMENT
ERIE, PENNSYLVANIA 16531

GENERAL ELECTRIC

GEK-24940 (5/79) 3M (F)

INSTRUCTIONS

GEK–24956A

AMPLIFIER CARD 193X256A–G02

DESCRIPTION

START UP/CHECK OUT

TROUBLESHOOTING

GENERAL ELECTRIC

WARNING

ALWAYS DISCONNECT ALL POWER TO THE DRIVE BEFORE REMOVING OR INSERTING A PRINTED CIRCUIT CARD. FAILURE TO DO SO MAY CAUSE SERIOUS INJURY TO PERSONNEL AND DAMAGE TO THE DRIVE OR DRIVEN MACHINERY.

GENERAL

This instruction provides the basic information required to start up and trouble shoot the Amplifier Card. Refer to the system diagrams to determine how the card is used in the overall system.

DESCRIPTION

This card contains six (6) operational amplifiers, OA1–OA6 for general purpose use.

Two diode networks are also provided.

START–UP / CHECK OUT

Refer to systems diagrams for amplifier connections.

TROUBLE SHOOTING

As an aid to trouble shooting a brief description of an operational amplifier follows:

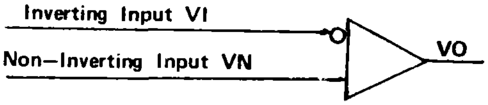

The output voltage is approximately 20,000 times the difference between the voltage on the non–inverting input and the inverting input, i.e. VO = 20,000 X (VN- VI). As long as the output voltage is not in clamp (or saturation), the difference between VN and VI is essentially zero. It should be noted that the voltage to common of the inputs has no affect on the output.

A bias current will flow into each input. This current is constant and is approximately 1/2 micro amp. Each input must be connected to provide a path for this current. For an operational amplifier connected as shown below –

$$VO = VN + \frac{ZF}{ZI}(VN-VI)$$

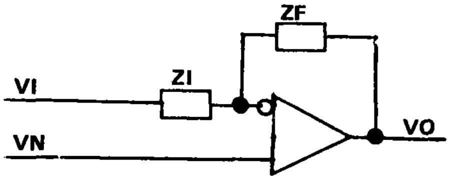

The output of an operational amplifier is short circuit proof and will swing a minimum of ± 10 volts with a 2K ohm resistive load. Capacitive loads will cause oscillation unless driven by the buffered output of OA3 or OA4 (Tabs 12 and 9X).

Check that ± 20 volts is applied to this card.

Check that the connected load is not less than 2000 ohms.

Analyze the input / output to determine if the input signal is improper or if the amplifier is defective.

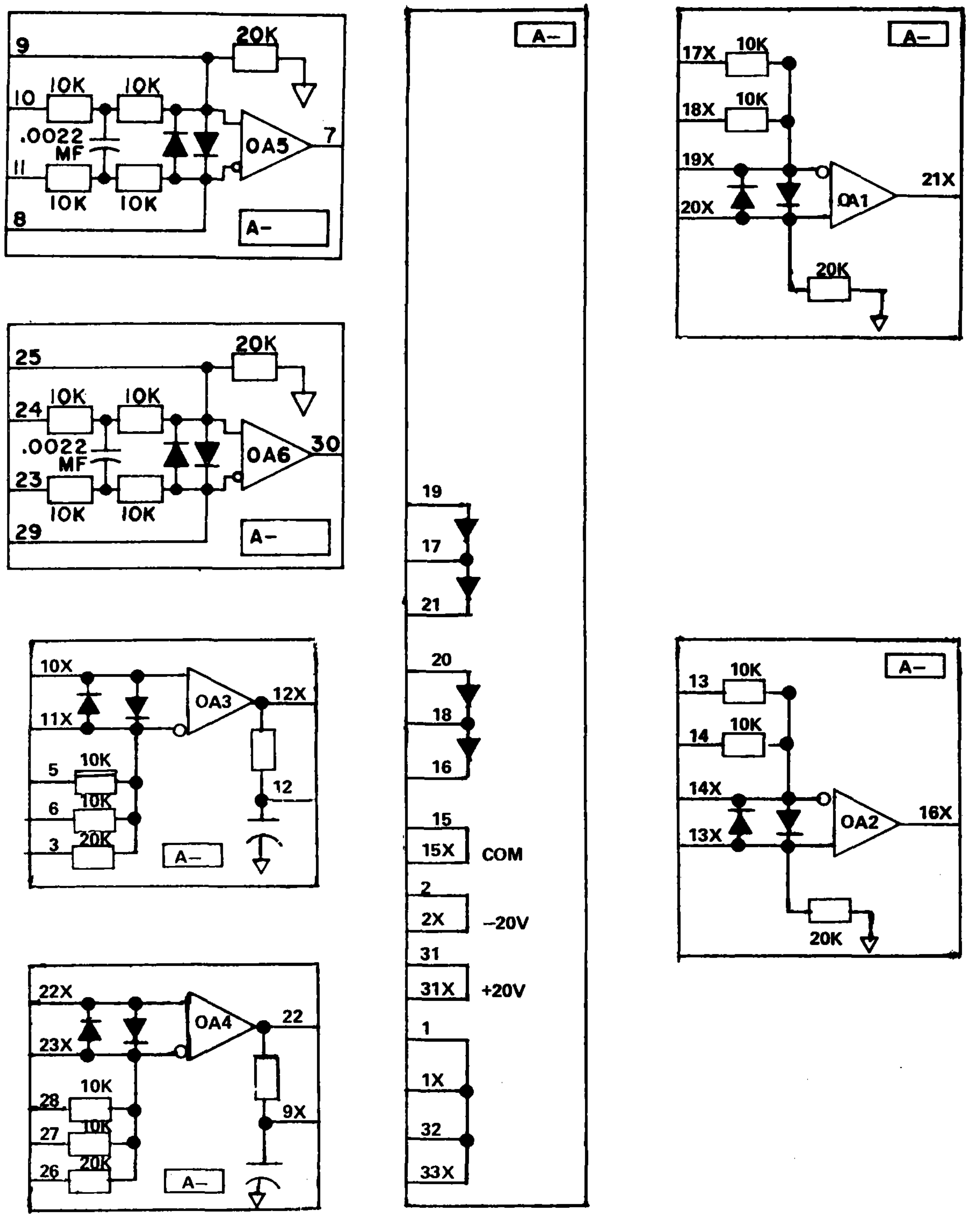
9
20K
10
10K
10K
.0022
MF
11
10K
10K
OA5
7
8
A-
25
20K
24
10K
10K
.0022
MF
23
10K
10K
OA6
30
29
A-
10X
11X
OA3
12X
5
10K
6
10K
3
20K
12
A–
22X
23X
OA4
22
28
10K
27
10K
26
20K
9X
A–
A–
19
17
21
20
18
16
15
15X
COM
2
2X
–20V
31
31X
+20V
1
1X
32
33X
A–
17X
10K
18X
10K
19X
20X
OA1
21X
20K
A–
13
10K
14
10K
14X
13X
OA2
16X
20K

GENERAL ELECTRIC

36C764161AA	
CONT ON SHEET 2	SH NO. 1

UNLESS OTHERWISE SPECIFIED USE THE FOLLOWING —

APPLIED PRACTICES	SURFACES	TOLERANCES ON MACHINED DIMENSIONS		
		FRACTIONS	DECIMALS	ANGLES
	✓	±	±	±

TITLE **ELEMENTARY DIAGRAM**

AMPLIFIER CARD

FIRST MADE FOR **STANDARD LINE**

193X256AAG02

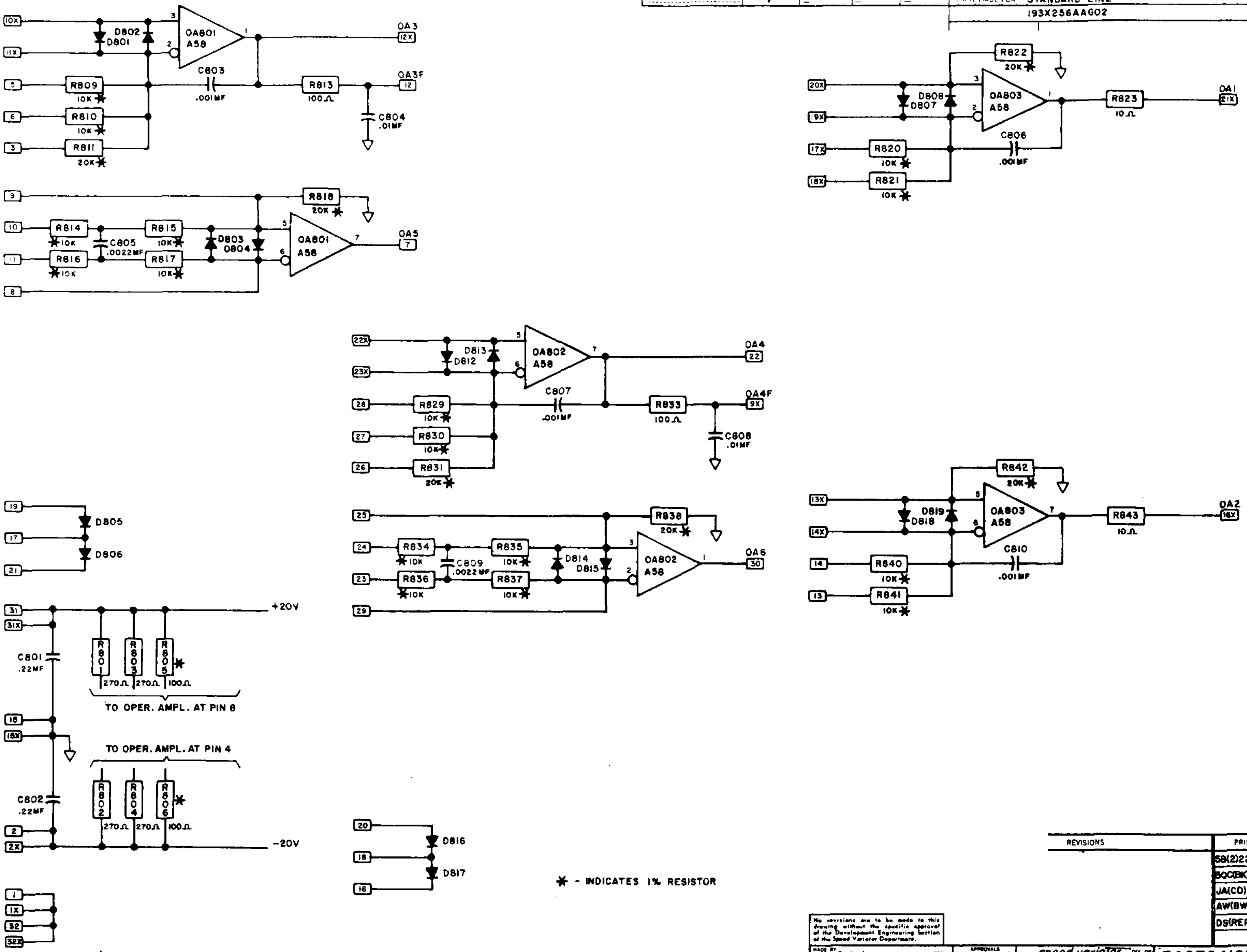

✱ - INDICATES 1% RESISTOR

REVISIONS	PRINTS TO	
	5B(2)22	5(S)
	5QC(BK)5	5D(BK)
	JA(CD)	5(TS)50
	AW(BW)	5L(BW)5
	DS(REP)	5AE(BW)
		5QC(B)

REV NO. 0

No revisions are to be made to this drawing without the specific approval of the Development Engineering Section of the Speed Variator Department.

MADE BY G.R. Baker	NOV. 11, 1975	APPROVALS	speed variator DIV OR DEPT	36C764161AA
ISSUED G.R. Baker	NOV. 13, 1975		ERIE, PA., U.S.A. LOCATION	CONT ON SHEET 2 SH NO. 1

PROPRIETARY INFORMATION OF THE GENERAL ELECTRIC COMPANY

GENERAL ELECTRIC 36C764161AA CONT ON SHEET FL SH NO 2

UNLESS OTHERWISE SPECIFIED USE THE FOLLOWING				
APPLIED PRACTICES	SURFACES	TOLERANCES ON MACHINED DIMENSIONS FRACTIONS	DECIMALS	ANGLES
716A515	✓	±	±	±

TITLE PRINTED CIRCUIT DIAGRAM
AMPLIFIER CARD
FIRST MADE FOR STANDARD LINE
193X256AAG02

HOLE TABULATION

ALL HOLES .040 DIA. EXCEPT
THE HOLES TABULATED BELOW

LOC.	DIA.	QUAN.
A	.157	2
B	.032	99
C	.052	4

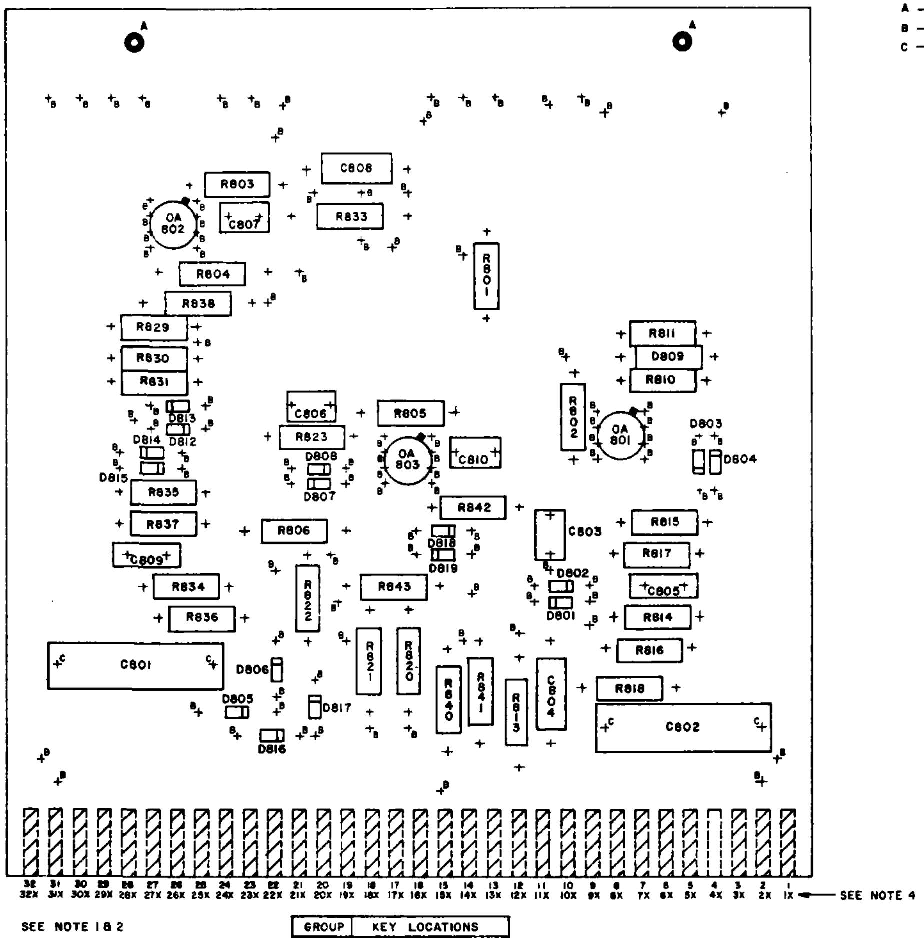

SEE NOTE 1 & 2

GROUP	KEY LOCATIONS			
01	12 – 13	19 – 20	30 – 31	

NOTES

1. INDICATED TAB NUMBERS CORRESPOND TO MATCHING RECEPTACLE NUMBERS
2. CROSS HATCHED TABS INDICATES TABS USED.
3. CARD SIZE, $5.500^{+.000}_{-.015}$ X $6.130^{+.002}_{-.006}$
4. THIS CARD HAS GOLD PLATED TABS ON BOTH SIDES. TABS 1 THRU 32 ARE LOCATED ON THE REVERSE SIDE. TABS 1X THRU 32X ARE LOCATED ON THE COMPONENT SIDE OF THE CARD. TAB 1X IS OPPOSITE TAB 1 AND ETC. THE TAB NUMBERS SHOWN ARE THOSE USED ON THIS CARD.
5. ALL OP AMPS SHALL BE MOUNTED TO A .50 INCH MAXIMUM ABOVE THE CARD SURFACE.

OP AMP LEAD SKETCH

(TOP VIEW)

SKETCH FOR
OA801, OA802, OA803,
OA804, OA805

2X	36A353861AA005	36A353862AA006	1	——
SCALE	REAR ETCHED BOARD DWG.	FRONT ETCHED BOARD DWG.	FRONT	BACK
			SPACE UNIT REQUIREMENT	

REVISIONS

No revisions are to be made to this drawing without the specific approval of the Development Engineering Section of the Speed Variator Department.

PRINTS TO	
5B(2)22	5(S)
5QC(BK)5	5D(BK)
JA(CD)	5(TS)5O
AW(BW)	5L(BW)5
DS(REP)	5AE(BW)
	5QC(B)

MADE BY G.R. Baker NOV.12,1975
ISSUED G.R. Baker NOV.13,1975
APPROVALS

speed variator
ERIE, PA., USA

36C764161AA CONT ON SHEET FL SH NO 2

PROPRIETARY INFORMATION OF THE GENERAL ELECTRIC COMPANY

GENERAL ELECTRIC COMPANY – DC MOTOR & GENERATOR DEPARTMENT
SPEED VARIATOR PRODUCTS OPERATION
ERIE, PENNSYLVANIA 16531

GENERAL ELECTRIC

GEK 24956A (10/78) 2.5M (F)

INSTRUCTIONS

GEK-24941A

20 VOLT POWER SUPPLY CARD, 193X257A_G01

GENERAL ELECTRIC

GEK-24941A (6/79) 2M (F)

INSTRUCTION

20 Volt Power Supply Card, 193X257A G01

1.0 GENERAL

This instruction provides the basic information required to start up and troubleshoot the subject card. Refer to the system diagrams to determine how the card has been used in the overall system.

2.0 DESCRIPTION

The 20 volt Power Supply Card in conjunction with a transformer and power supply rectifier provides regulated +20V DC and -20V DC to operate other printed circuit cards and assemblies.

2.01 Each output is factory trimmed to 20V ±.1 volt and will provide up to 750 mA of current.

2.02 The outputs are individually fused to protect the card against overload.

2.03 Individual overvoltage circuits are furnished which will momentarily short the outputs to zero, forcing the fuses to open, whenever excessive voltage appears at the outputs.

2.04 The card is designed such that if one of the fuses opens, the overvoltage circuit on the other side will force the other fuse to open.

2.05 Two spare fuses are provided.

2.06 Test posts which are connected to the outputs through a 15K ohm resistor are provided to monitor the output voltage.

3.0 START—UP/CHECKOUT

There are no adjustments on this card.

4.0 TROUBLESHOOTING

The normal voltage conditions are as follows:

Tabs 10, 11	-22 to -45V DC	Unregulated input
Tabs 20, 21	+22 to +45 V DC	Unregulated input
Tabs 2, 3, 5, 6	-19.0 to -20.1V DC	No load to full load
Tabs 28, 29, 30, 31	+19.9 to +20.1V DC	No load to full load

If trouble is suspected in this card, remove all loads connected to the +20 and -20 volt outputs and all loads connected to tabs 8 and 26 prior to concluding the card is defective.

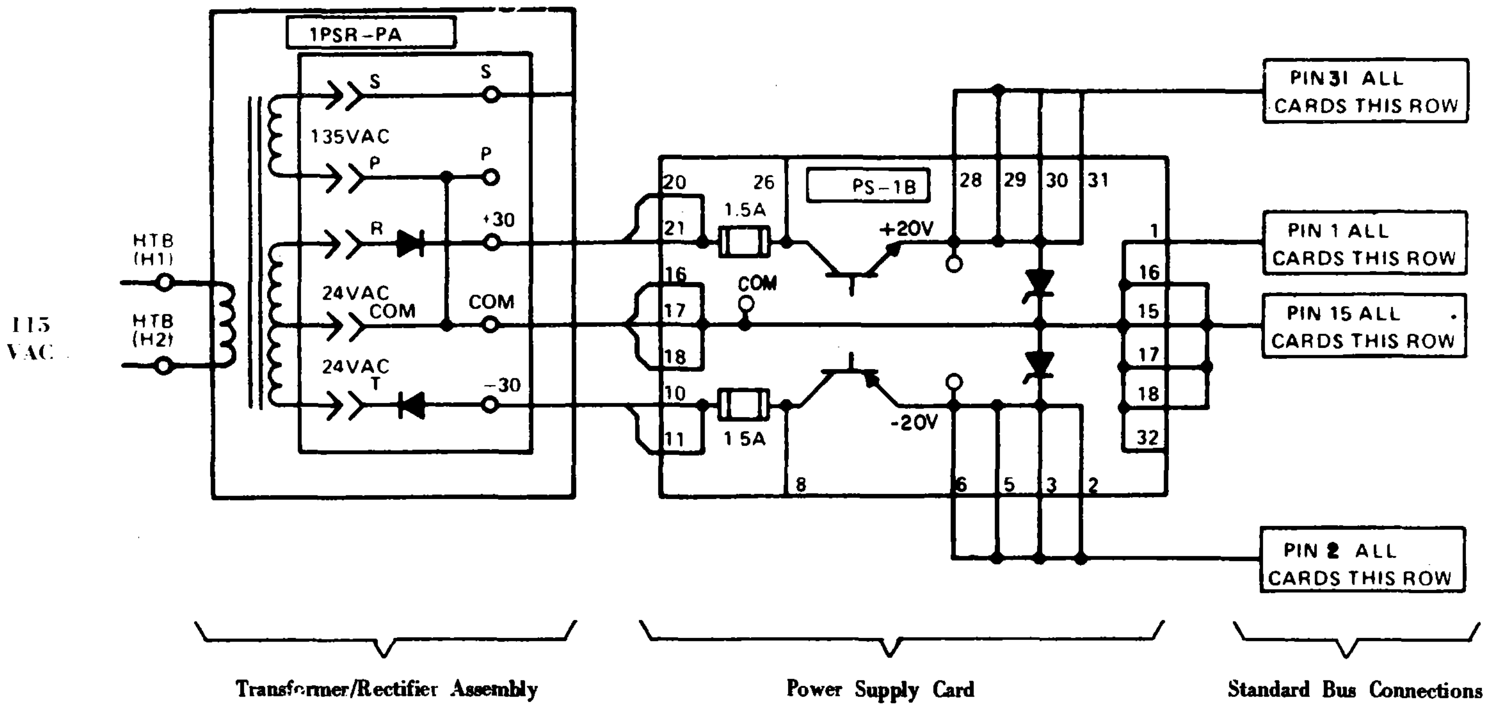
1PSR-PA
S
S
135VAC
P
P
R
+30
24VAC
COM
COM
24VAC
T
-30
HTB (H1)
HTB (H2)
115 VAC
20
26
21
1.5A
PS-1B
28
29
30
31
+20V
16
COM
17
18
10
11
1 5A
-20V
8
6
5
3
2
1
16
15
17
18
32
PIN 31 ALL CARDS THIS ROW
PIN 1 ALL CARDS THIS ROW
PIN 15 ALL CARDS THIS ROW
PIN 2 ALL CARDS THIS ROW
Transformer/Rectifier Assembly
Power Supply Card
Standard Bus Connections

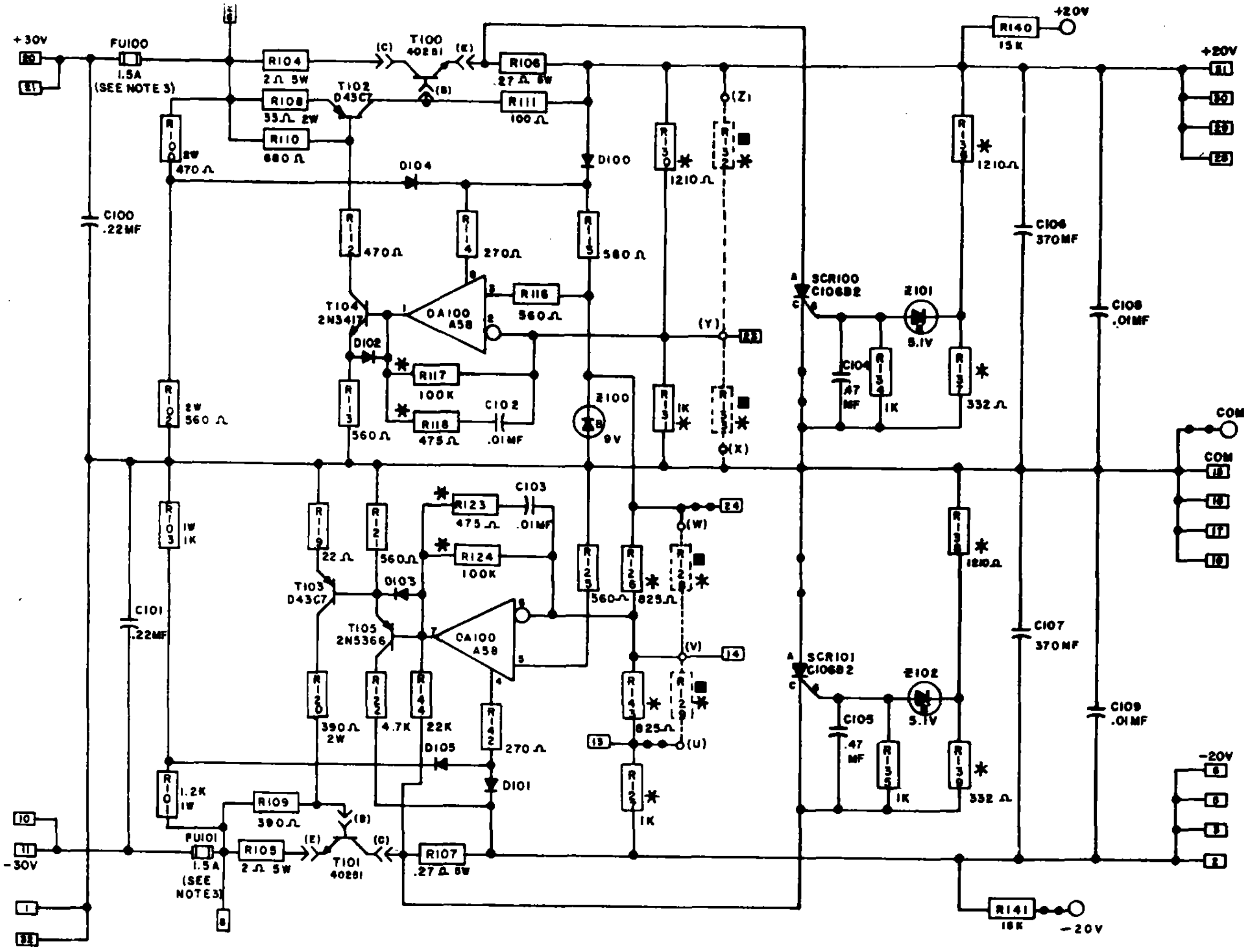

NOTES 1. * – 1% TEMPERATURE COMPENSATED RESISTOR.
■ – RESISTOR SELECTION IN TEST.

2 NUMBERS INSIDE SMALL RECTANGLES INDICATE TAB NUMBERS WHICH CORRESPOND TO MATCHING RECEPTACLE NUMBERS.

3. FUSES ARE INSTRUMENT TYPE, LITTLE FUSE 361001, OR EQUIVALENT.

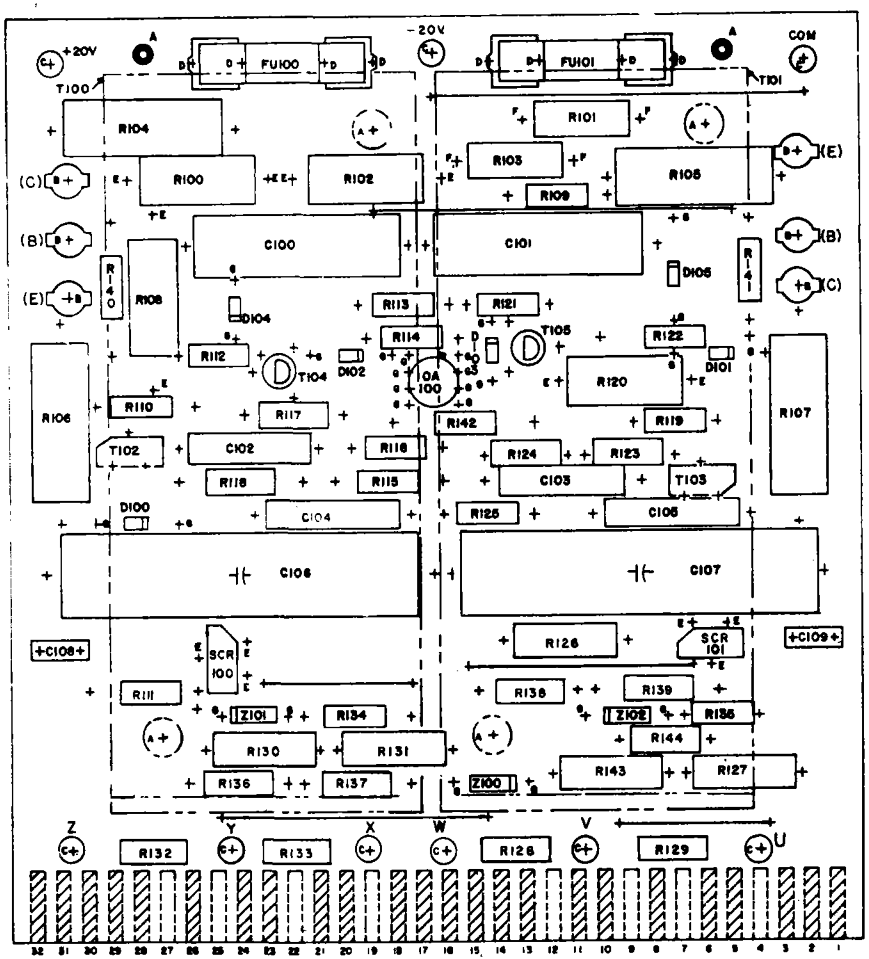

SEE NOTE 1&2

GROUP	KEY LOCATIONS			
01	6-7	12-13	26-27	——

HOLE TABULATION

ALL HOLES .040 DIA. EXCEPT
THE HOLES TABULATED BELOW

LOC.	DIA.	QUAN
A	.157	6
B	.101	6
C	.081	9
D	.078	8
E	.062	14
F	.052	4
G	.032	26

NOTES

1. INDICATED TAB NUMBERS CORRESPOND TO MATCHING RECEPTACLE NUMBERS
2. CROSS HATCHED TABS INDICATES TABS USED.
3. CARD SIZE, $5.500^{+.000}_{-.016}$ X $5.130^{+.002}_{-.008}$

SCR LEAD SKETCHES

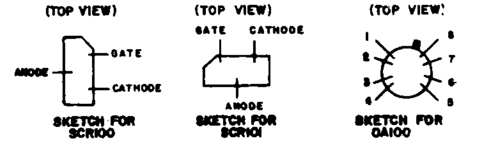

SKETCH FOR SCR100

SKETCH FOR SCR101

SKETCH FOR OA100

TRANSISTOR LEAD SKETCHES

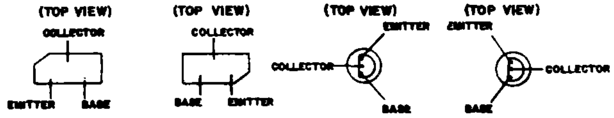

SKETCH FOR T102

SKETCH FOR T103

SKETCH FOR T104

SKETCH FOR T105

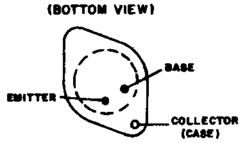

SKETCH FOR T100, T101

2X	36A355740AB004	——	2	——
SCALE	REAR ETCHED BOARD DWG.	FRONT ETCHED BOARD DWG.	FRONT	BACK
			SPACE UNIT REQUIREMENT	

GENERAL ELECTRIC COMPANY — DIRECT CURRENT MOTOR & GENERATOR PRODUCTS DEPARTMENT
ERIE, PENNSYLVANIA 16531

GENERAL ELECTRIC

INSTRUCTIONS

GEK-24943

LOGIC RELAY, 193X265A_G04

GENERAL ELECTRIC

Instruction

Logic Relay, 193X265A_G04

1.0 GENERAL

This instruction provides the basic information required to checkout the Logic Relay card. Refer to the system diagrams for information on how this card is used in the overall system.

2.0 DESCRIPTION

This card contains four relays, each relay is 4PDT with a 115V AC, 50/60 Hz coil.

2.01 A front edge indicator is provided for each relay which illuminates when current is flowing thru the coils.

2.02 The relay contacts are rated 1 amp resistive, either 115V AC or 20V DC.

2.03 Pilot duty rating for 115V AC coils is .8 amp inrush, and .18 amps holding current.

2.04 This card is not suitable for switching dry circuits.

3.0 START-UP/CHECKOUT

Verify that the relays pick up and drop out at the appropriate time.

4.0 TROUBLESHOOTING

Verify the contacts are opening and closing properly when power is applied to the coil.

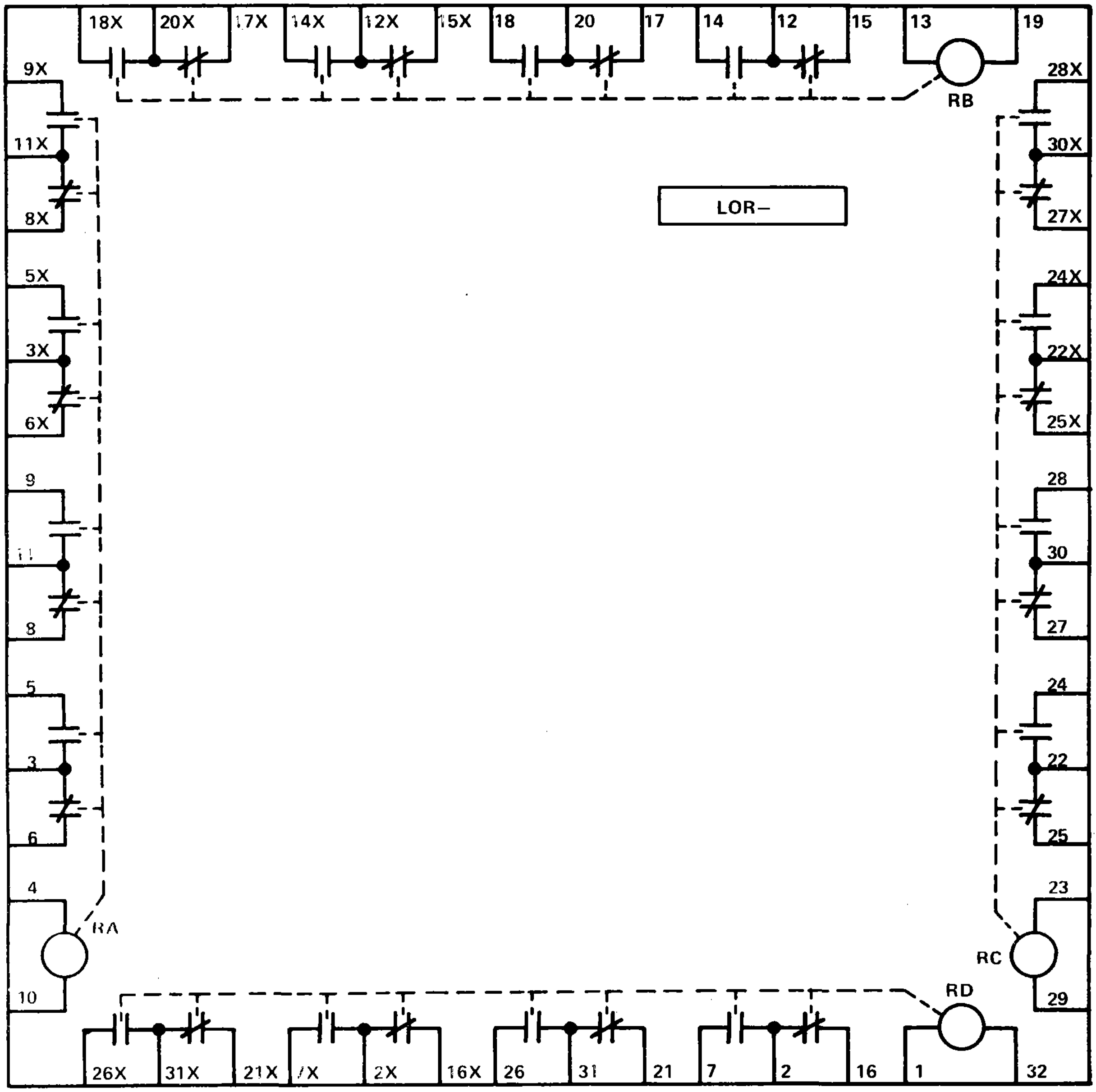
18X
20X
17X
14X
12X
15X
18
20
17
14
12
15
13
19
RB
9X
28X
11X
30X
8X
27X
LOR−
5X
24X
3X
22X
6X
25X
9
28
11
30
8
27
5
24
3
22
6
25
4
23
RA
RC
10
29
RD
26X
31X
21X
7X
2X
16X
26
31
21
7
2
16
1
32

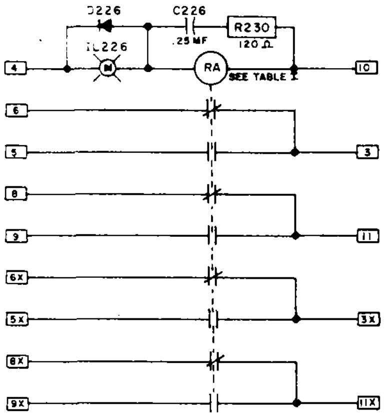

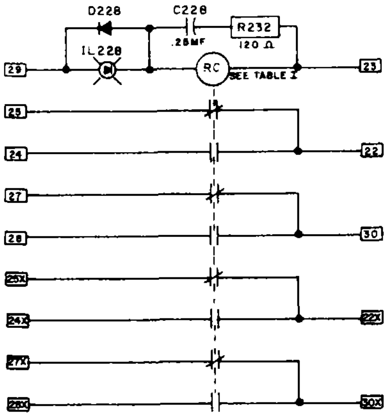

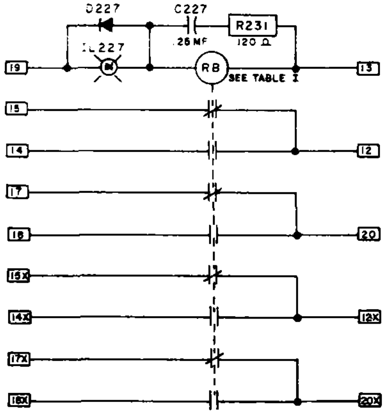

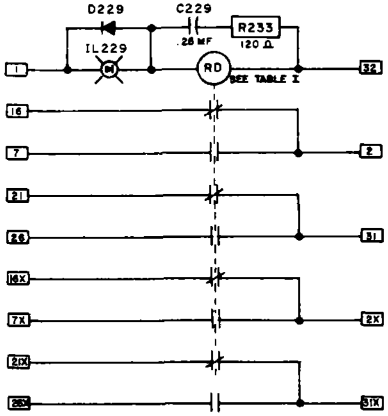

NOTES

TABLE I

CARD CATALOG NO	QTY. OF RELAYS	RELAY NOMENCLATURE	TAB CONNECTION
			SEE SCHEMATIC ABOVE FOR TABS ASSOCIATED WITH RELAY NOMENCLATURE
193X265AAG02	2	RA, RB	
193X265AAG04	4	RA, RB, RC, RD	

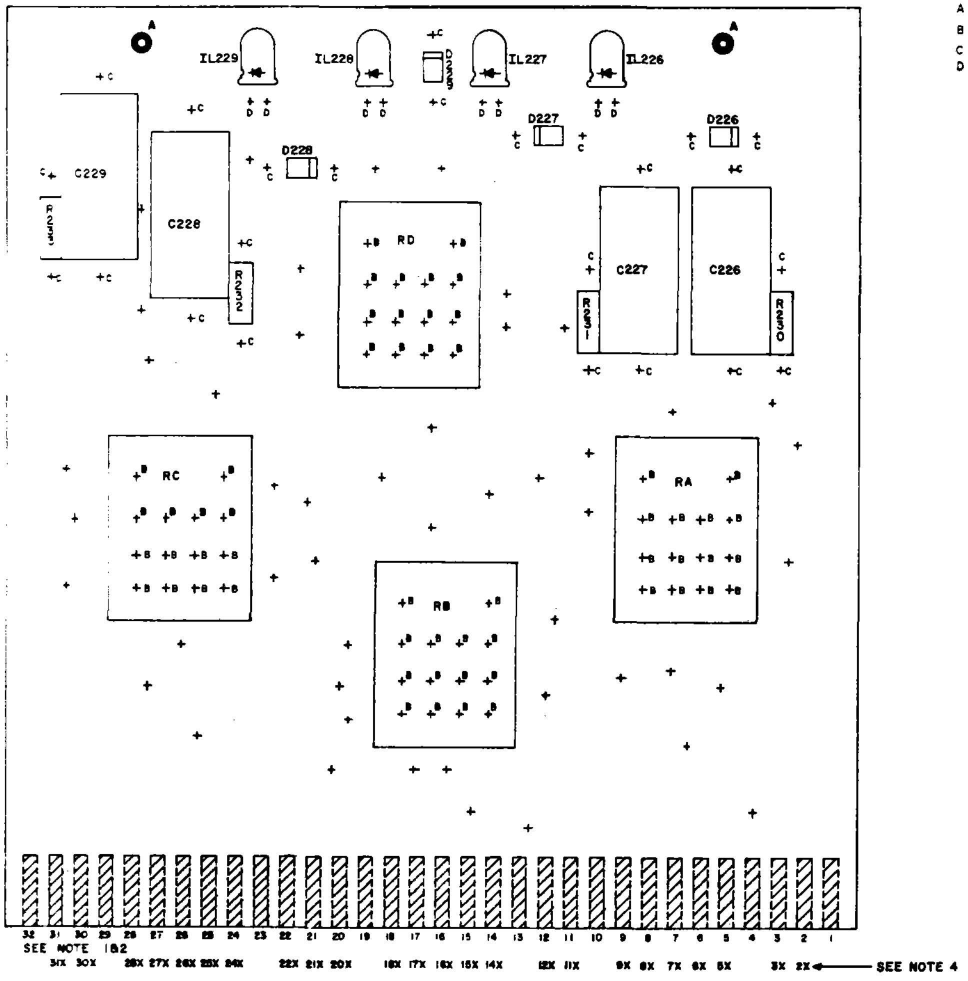

HOLE TABULATION

ALL HOLES 032 DIA. EXCEPT
THE HOLES TABULATED BELOW

LOC. DIA. QUAN.
A ——— .157 ——— 2
B ——— .062 ——— 56
C ——— .052 ——— 24
D ——— .040 ——— 8

NOTES

1. INDICATED TAB NUMBERS CORRESPOND TO MATCHING RECEPTACLE NUMBERS
2. CROSS HATCHED TABS INDICATES TABS USED.
3. CARD SIZE, $5.500^{+.000}_{-.015}$ X $5.130^{+.002}_{-.008}$
4. THIS CARD HAS GOLD PLATED TABS ON BOTH SIDES. TABS 1 THRU 32 ARE LOCATED ON THE REVERSE SIDE. TABS 1X THRU 32X ARE LOCATED ON THE COMPONENT SIDE OF THE CARD. TAB 1X IS OPPOSITE TAB 1 AND ETC. THE TAB NUMBERS SHOWN ARE THOSE USED ON THIS CARD.
5. SEE TABLE I ON SH.1 THIS DWG. FOR RELAY SUPPLIED WITH GROUPS.

GROUP	KEY LOCATIONS			
802	7-8	18-19		
804	4-5	7-8	13-14	18-19

2X	36A352961AA005	36A352962AA005	2	——
SCALE	REAR ETCHED BOARD DWG.	FRONT ETCHED BOARD DWG.	FRONT	BACK
			SPACE UNIT	REQUIREMENT

GENERAL ELECTRIC COMPANY — DIRECT CURRENT MOTOR & GENERATOR PRODUCTS DEPARTMENT
ERIE, PENNSYLVANIA 16531

GENERAL ELECTRIC

GEK-24943 (4/79) 2M (F)

INSTRUCTIONS

GEK-24945A

SIGNAL ISOLATOR, 193X276A_G01

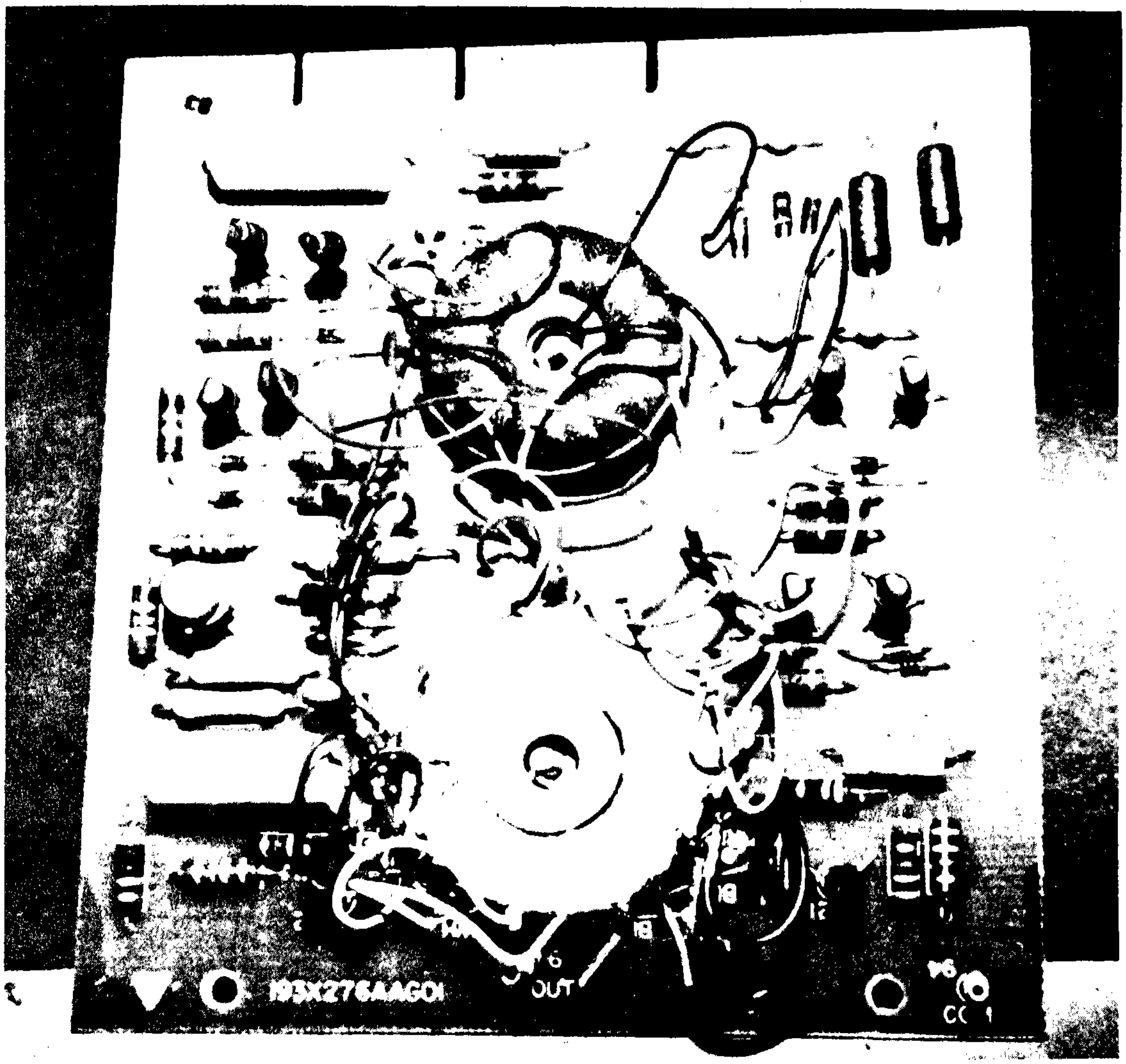

GENERAL ELECTRIC

GEK-24945A (6/79) 2M (F)

INSTRUCTION

Signal Isolator, 193X276A G01

1.0 GENERAL

This instruction provides the basic information required to checkout the Signal Isolator card. Refer to the system diagrams for information on how this card is used in the overall system.

2.0 DESCRIPTION

This card provides an output signal proportional to the input signal where the input signal and the output signal are isolated from each other and from the power input.

2.01 When the output load is less than 1 milliamp (1mA) the output at tabs 5 and 11 will be approximately .95 times the input at tabs 22 and 27. The output will be linear for inputs up to 20 volts.

2.02 An input clamp is provided to help protect the card against input voltages exceeding 20 volts.

2.03 The output may be filtered by connecting tab 10 to tab 11.

2.04 An operational amplifier is furnished for those cases where more than 1mA of output current is required. When this amplifier is used, the output will be limited to approximately 12 volts but it will provide up to 5mA of current. When this amplifier is used, -20 volts must be supplied to the card.

2.05 A test post is provided to monitor the output of the amplifier.

3.0 START—UP/CHECKOUT

Check that the amplifier output OUT is proper. There are no adjustments on this card.

4.0 TROUBLESHOOTING

Check that +20 volts is applied at tab 31. To check the isolator section, remove the output load and measure the input voltage between tabs 22 and 27 and the output voltage between tabs 5 and 11.

If the amplifier is used, check that -20 volts is applied to tab 2, and that any inputs at tab 6 are not causing the card to appear to malfunction.

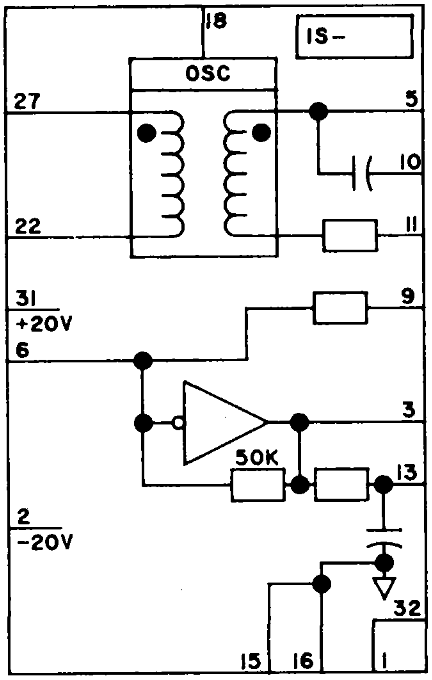
18
IS-
OSC
27
5
10
22
11
31
+20V
9
6
3
50K
13
2
-20V
32
15
16
1

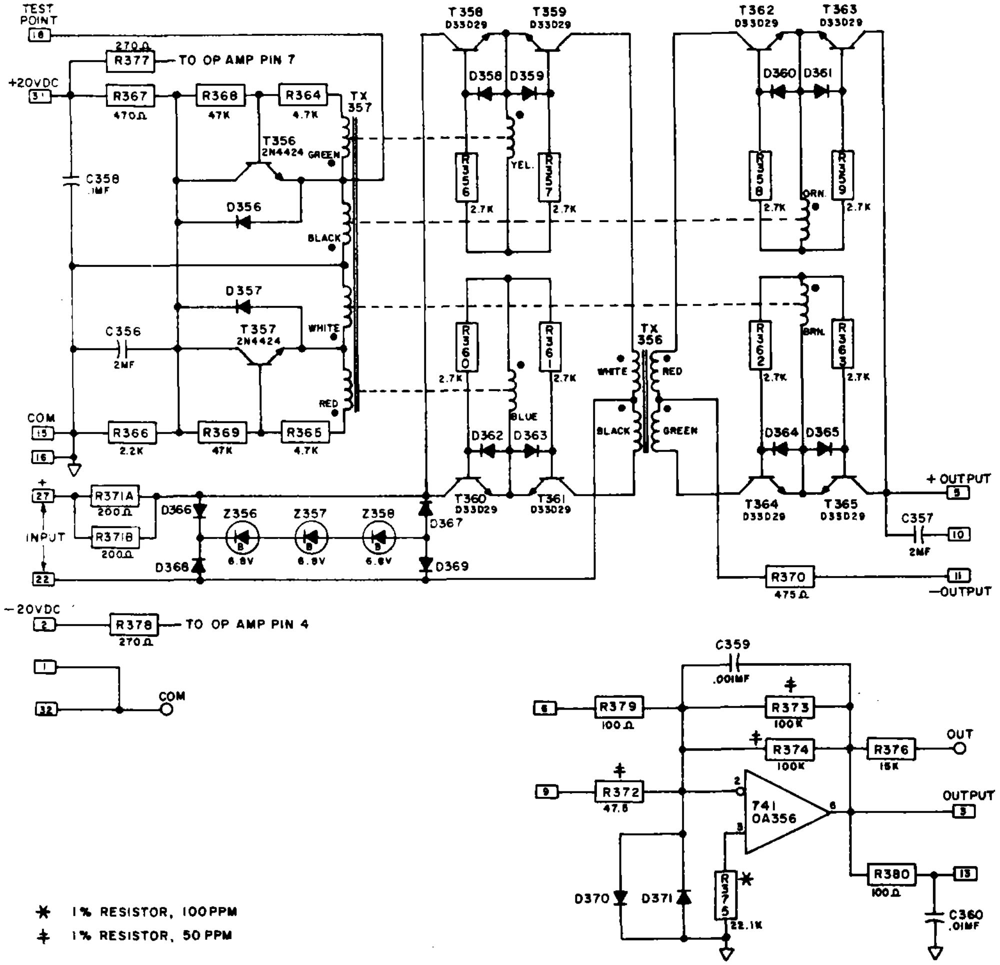
TEST POINT
18
270Ω R377 TO OP AMP PIN 7
+20VDC 3
R367 470Ω
R368 47K
R364 4.7K
TX 357
T356 2N4424
GREEN
C358 .1MF
D356
BLACK
D357
C356 2MF
T357 2N4424
WHITE
RED
COM 15
16
R366 2.2K
R369 47K
R365 4.7K
T358 D33D29
T359 D33D29
D358 D359
YEL.
R356 2.7K
R357 2.7K
R360 2.7K
R361 2.7K
BLUE
D362 D363
T360 D33D29
T361 D33D29
TX 356
WHITE RED
BLACK GREEN
T362 D33D29
T363 D33D29
D360 D361
R358 2.7K
ORN.
R359 2.7K
R362 2.7K
BRN.
R363 2.7K
D364 D365
T364 D33D29
T365 D33D29
+ OUTPUT 5
C357 2MF 10
R370 475Ω
11 −OUTPUT
+ 27
R371A 200Ω
INPUT
R371B 200Ω
22
D366
Z356 6.8V
Z357 6.8V
Z358 6.8V
D367
D368
D369
−20VDC 2
R378 270Ω TO OP AMP PIN 4
1
32
COM
C359 .001MF
6 R379 100Ω
R373 100K
R374 100K
R376 15K
OUT
9 R372 47.5
2 3 6
741 OA356
OUTPUT 8
D370 D371
R375 22.1K
R380 100Ω
13
C360 .01MF
✱ 1% RESISTOR, 100PPM
‡ 1% RESISTOR, 50 PPM

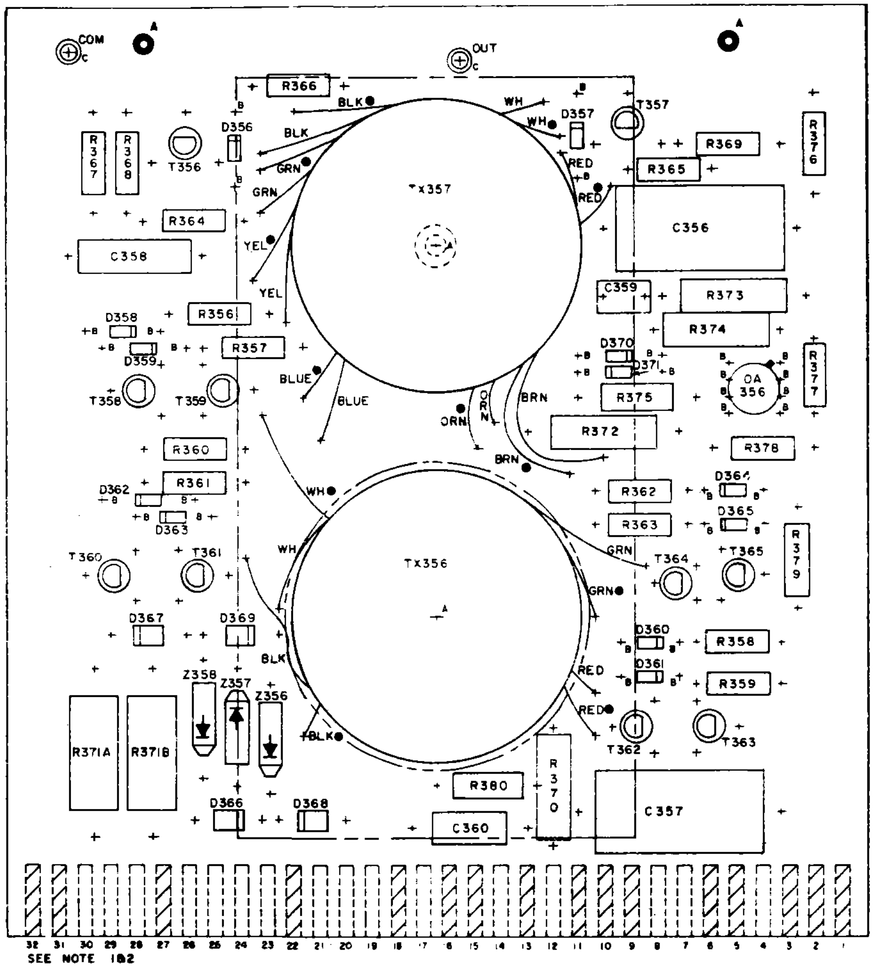

HOLE TABULATION

ALL HOLES .040 DIA. EXCEPT THE HOLES TABULATED BELOW

LOC.	DIA	QUAN
A	.157	4
B	.032	32
C	.081	2

NOTES

1 INDICATED TAB NUMBERS CORRESPOND TO MATCHING RECEPTACLE NUMBERS

2 CROSS HATCHED TABS INDICATES TABS USED.

3 CARD SIZE, $5.500^{+.000}_{-.015} \times 5.130^{+.002}_{-.008}$

4 ● DENOTES KNOTTED LEAD

TRANSISTOR LEAD SKETCHES

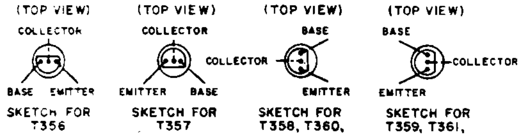

OP AMP LEAD SKETCH

(TOP VIEW)

SKETCH FOR OA356

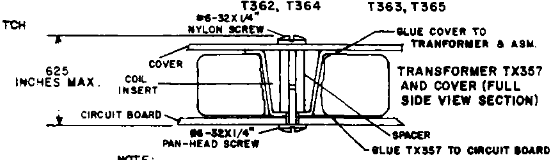

TRANSFORMER TX357 AND COVER (FULL SIDE VIEW SECTION)

NOTE: 5. ALL TRANSISTORS, OP AMPS AND TRANSFORMERS SHALL BE MOUNTED TO THE MAXIMUN ABOVE THE CARD SURFACE AS SHOWN BELOW.

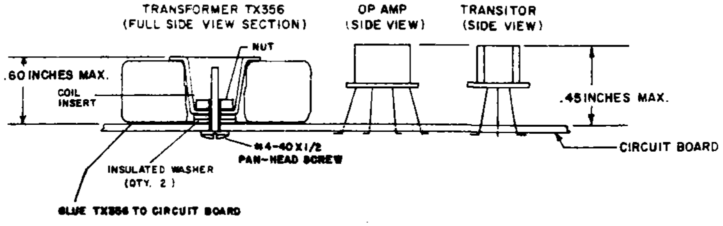

GROUP	KEY LOCATIONS			
G01	6-7	12-13	19-20	

GENERAL ELECTRIC COMPANY — DIRECT CURRENT MOTOR & GENERATOR PRODUCTS DEPARTMENT
ERIE, PENNSYLVANIA 16531

GENERAL ELECTRIC

INSTRUCTIONS

GEK-24946B

SIGNAL LEVEL DETECTOR, 193X277ABG01, G02

GENERAL ELECTRIC

INSTRUCTION

SIGNAL LEVEL DETECTOR, 193X277ABG01, G02

1.0 GENERAL

This instruction provides basic information regarding the subject card. Refer to the system elementary diagrams for information relating to the overall system operation.

2.0 DESCRIPTION

(Test point and tab references are made with respect to the G01 card and channel A of the G02 card only).

2.01 This card provides a relay operation and indication when the input voltage exceeds a preset positive and/or negative level.

2.02 Two card versions are available:
G01: one relay channel
G02: two identical relay channels

2.03 The input voltage level at tab 22 to produce a relay pick-up can be adjusted by the "level adj." potentiometer for a voltage range of .1V to 10V measured at test post "TP1." The pick-up level is fixed at 10V ±.15V measured at "TP2." The input voltage at tab 22 should not exceed ±40V.

2.04 The card may be connected for pick-up at either a positive input, a negative input or both:
Positive polarization: Standard
Negative polarization: Connect tab 19 to tab 24.
Non-polarized: Connect tab 19 to tab 21.

2.05 The dropout level is approximately 90% of the pick-up level. By connecting tab 20 to tab 31 (+20V) the dropout level can be adjusted with the "hysteresis" potentiometer for a dropout level from 90% to 98% of the pick-up level.

2.06 The RC time constant of the input filter can be reduced from 20 to 2 milliseconds by connecting tab 23 to tab 22. Additional filtering can be obtained by connecting a capacitor between tab 23 and common (tab 15).

CAUTION

TO AVOID RELAY CHATTERING IT IS ESSENTIAL THAT THE PEAK—TO—PEAK RIPPLE VOLTAGE MEASURED AT "TP2" AT THE PICK—UP LEVEL IS LESS THAN THE HYSTERESIS VOLTAGE.

2.07 The pilot duty rating of the fault relay interlocks are .3A holding and 1.5A inrush at 115VAC.

3.0 ADJUSTMENTS

3.01 Apply the desired pick-up voltage level at tab 22. Turn the "Level Adj." pot CCW until the relay picks up. Check reverse polarity for non-polarized operation.

3.02 If less than the standard 10% hysteresis is required turn the "hysteresis" pot CW for maximum hysteresis with tab 20 connected to +20V (tab 31). Repeat step 3.01. Reduce the input voltage at tab 22 to the desired dropout level. Turn the "hysteresis" pot CCW until the relay drops out. Increase input filtering to avoid relay chattering if necessary.

4.0 TROUBLESHOOTING

4.01 Check for:

a) proper input connections
b) proper polarity jumpers if required
c) proper adjustments as described above
d) sufficient filtering at TP2

4.02 Check for actual operation of the relay interlocks.

4.03 If card failures are experienced, check for:

a) excessive voltage (above ±40V) at tab 22.
b) excessive relay interlock duty.
c) excessive voltage transients on relay interlock wires. If an interlock is used in another relay coil circuit, the coil should be suppressed. Long wire runs to the relay interlocks should be avoided.

FUNCTIONAL BLOCK DIAGRAM

SIGNAL LEVEL DETECTOR

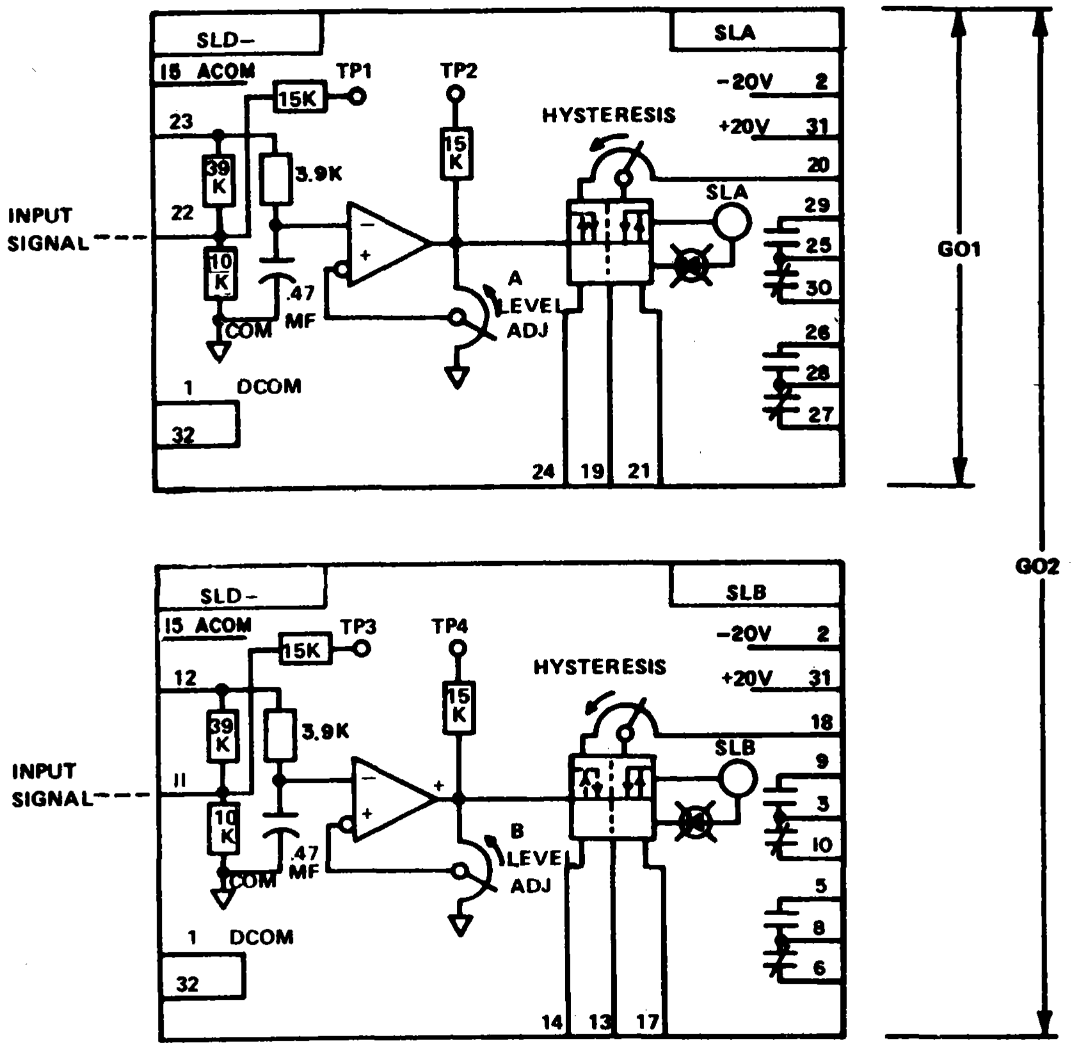

GENERAL ELECTRIC

36C764132AB
CONT ON SHEET 2 SH NO 1

UNLESS OTHERWISE SPECIFIED USE THE FOLLOWING —

APPLIED PRACTICES	SURFACES	TOLERANCES ON MACHINED DIMENSIONS FRACTIONS	DECIMALS	ANGLES
	✓	±	±	±

TITLE ELEMENTARY DIAGRAM
SIGNAL LEVEL DETECTOR

FIRST MADE FOR STANDARD LINE
193X277ABG01

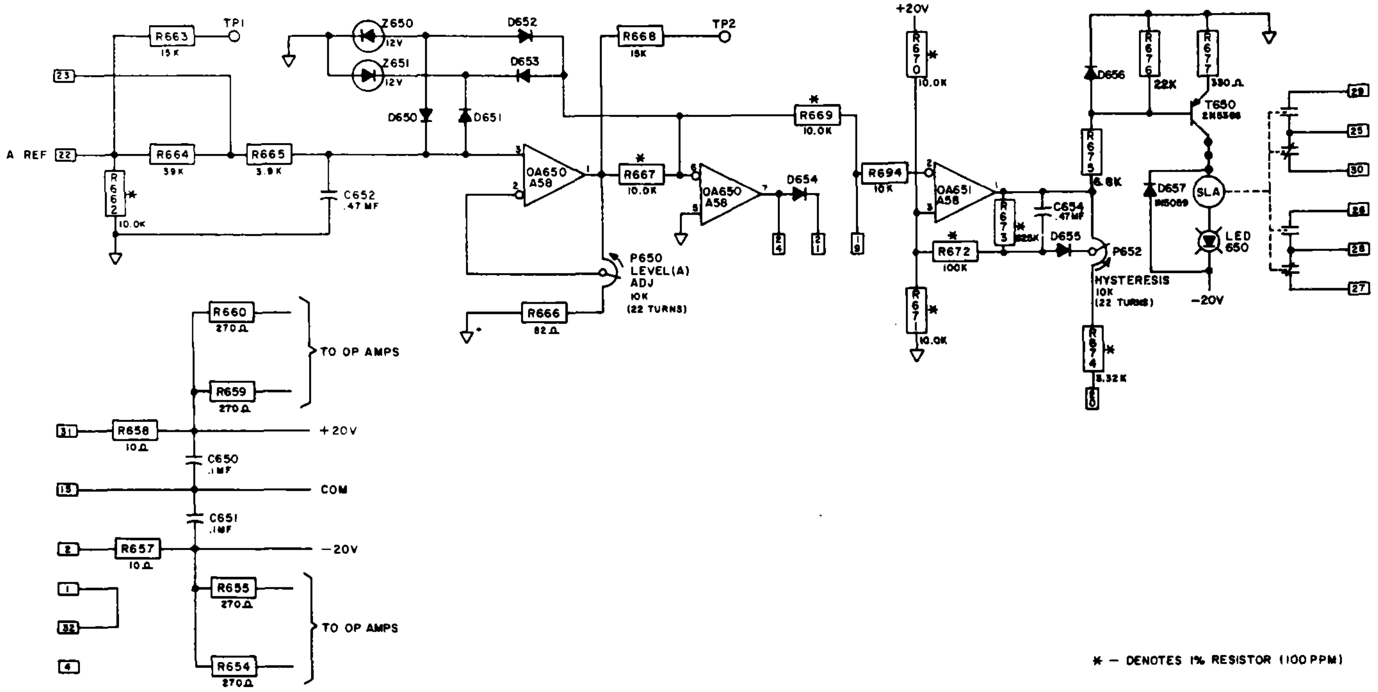

* — DENOTES 1% RESISTOR (100 PPM)

REVISIONS

No revisions are to be made to this drawing without the specific approval of the Development Engineering Section of the Speed Variator Department.

PRINTS TO	
5B(8)M	5J(BW)
5R(2)BW	T5(50)
5L(2)BW	
AW(BW)	
5D(CD)	
JA(CD)	

ELEMENTARY DIAGRAM 193X277ABG01

PROPRIETARY INFORMATION OF THE GENERAL ELECTRIC COMPANY

MADE BY T. Fealey March 19, 1978
ISSUED G.R. Baker MARCH 23, 1978
APPROVALS

SPEED VARIATOR PROD DIV OR DEPT
ERIE, PA. USA LOCATION

36C764132AB
CONT ON SHEET 2 SH NO. 1

GENERAL ELECTRIC

36C764132AB
CONT ON SHEET FL SH NO 2

UNLESS OTHERWISE SPECIFIED USE THE FOLLOWING				
APPLIED PRACTICES	SURFACES	TOLERANCES ON MACHINED DIMENSIONS FRACTIONS	DECIMALS	ANGLES
718A915	✓	+ −	+ −	+ −

TITLE PRINTED CIRCUIT DIAGRAM
SIGNAL LEVEL DETETCTOR
FIRST MADE FOR STANDARD LINE
193X277ABG01

HOLE TABULATION

ALL HOLES .040 DIA. EXCEPT THE HOLES TABULATED BELOW

LOC.	DIA.	QUAN.
A	.157	2
B	.032	30
C	.052	8
D	.081	2

NOTES

1. INDICATED TAB NUMBERS CORRESPOND TO MATCHING RECEPTACLE NUMBERS
2. CROSS HATCHED TABS INDICATES TABS USED.
3. CARD SIZE, $5.500^{+.000}_{-.015}$ X $6.130^{+.002}_{-.006}$
4. ALL TRANSISTORS & OP AMPS SHALL BE MOUNTED TO A .50 INCH MAXIMUM ABOVE THE CARD SURFACE AS SHOWN BELOW.

TRANSISTOR & OP AMP (SIDE VIEW)

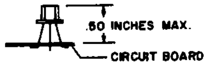

TRANSISTOR LEAD SKETCH (TOP VIEW)

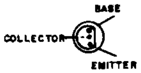

SKETCH FOR T650

OP AMP LEAD SKETCH (TOP VIEW)

SKETCH FOR OA650, OA651

GROUP	KEY LOCATIONS			
G01	24-25	12-13	6-7	

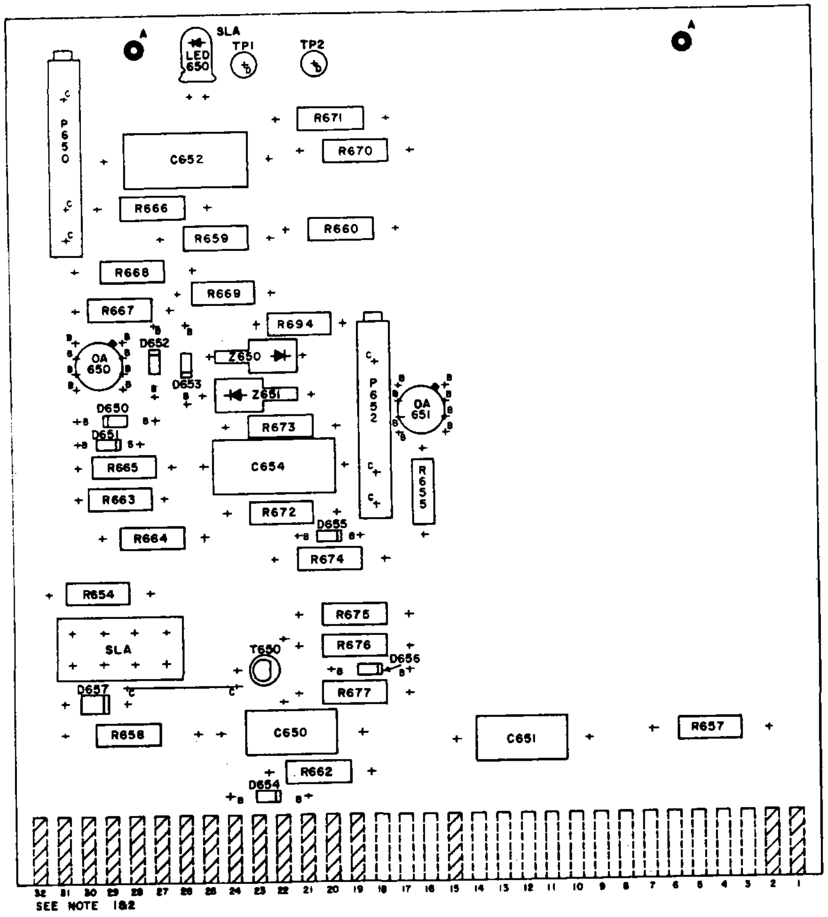

CARD DIAGRAM 193X277ABG01

2X	36A353833AA004	1	—
SCALE	REAR ETCHED BOARD DWG.	FRONT SPACE UNIT	BACK REQUIREMENT

REVISIONS

No revisions are to be made to this drawing without the specific approval of the Development Engineering Section of the Speed Variator Department.

PRINTS TO	
5B(8)M	5J(BW)
5R(2)BW	T8(50)
5L(2)BW	
AW(BW)	
5D(CD)	
JA(CD)	

MADE BY T. Easter March 14, 1978
ISSUED J. R. Baker MARCH 23, 1978
APPROVALS
SPEED VARIATOR PROD DIV OR DEPT
ERIE, PA USA LOCATION
36C764132AB
CONT ON SHEET FL SH NO 2

m.

GENERAL ELECTRIC 36C764133AB
CONT ON SHEET 2 SH NO. 1

UNLESS OTHERWISE SPECIFIED USE THE FOLLOWING —

APPLIED PRACTICES	SURFACES	TOLERANCES ON MACHINED DIMENSIONS		
		FRACTIONS	DECIMALS	ANGLES
	✓	±	±	±

TITLE **ELEMENTARY DIAGRAM**
SIGNAL LEVEL DETECTOR

FIRST MADE FOR **STANDARD LINE**
193X277ABG02

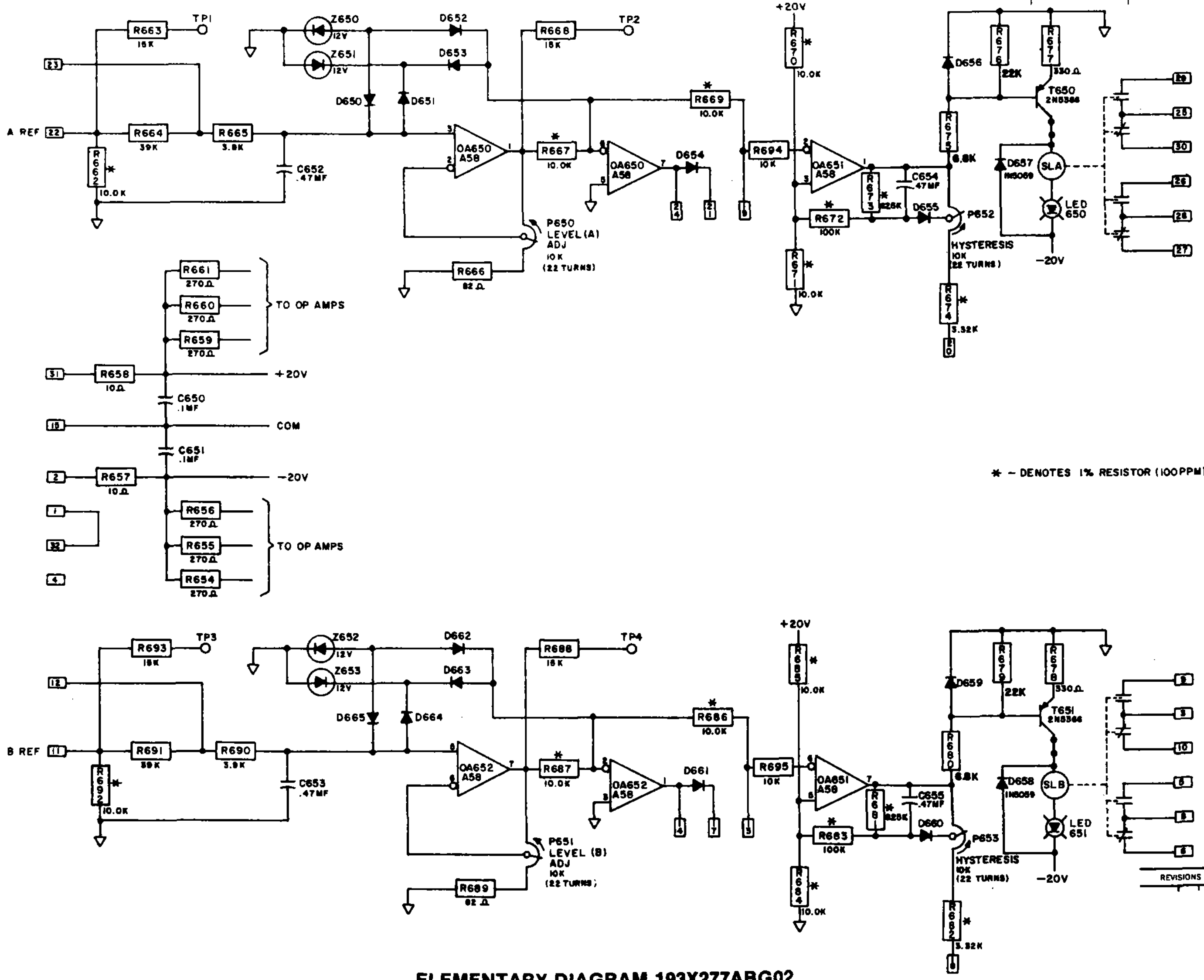

No revisions are to be made to this drawing without the specific approval of the Development Engineering Section of the Speed Variator Department

REVISIONS

PRINTS TO	
5B(6)M	5J(BW)
5R(2)BW	TS(50)
5L(2)BW	
AW(BW)	
5D(CD)	
JA(CD)	

ELEMENTARY DIAGRAM 193X277ABG02

PROPRIETARY INFORMATION OF THE GENERAL ELECTRIC COMPANY

MADE BY March 14, 1978
ISSUED T.K. Baker MARCH 23, 1978
APPROVALS

SPEED VARIATOR PROD DIV OR DEPT
ERIE, PA USA LOCATION

36C764133AB
CONT ON SHEET 2 SH NO. 1

GENERAL ELECTRIC 36C764133AB CONT ON SHEET FL SH NO 2

UNLESS OTHERWISE SPECIFIED USE THE FOLLOWING

APPLIED PRACTICES	SURFACES	TOLERANCES ON MACHINED DIMENSIONS FRACTIONS	DECIMALS	ANGLES
7I8A5I5	✓	±	±	±

TITLE PRINTED CIRCUIT DIAGRAM
SIGNAL LEVEL DETECTOR CARD
FIRST MADE FOR STANDARD LINE
193X277ABG02

HOLE TABULATION

ALL HOLES .040 DIA. EXCEPT THE HOLES TABULATED BELOW

LOC.	DIA.	QUAN.
A	.157	2
B	.032	52
C	.052	16
D	.081	4

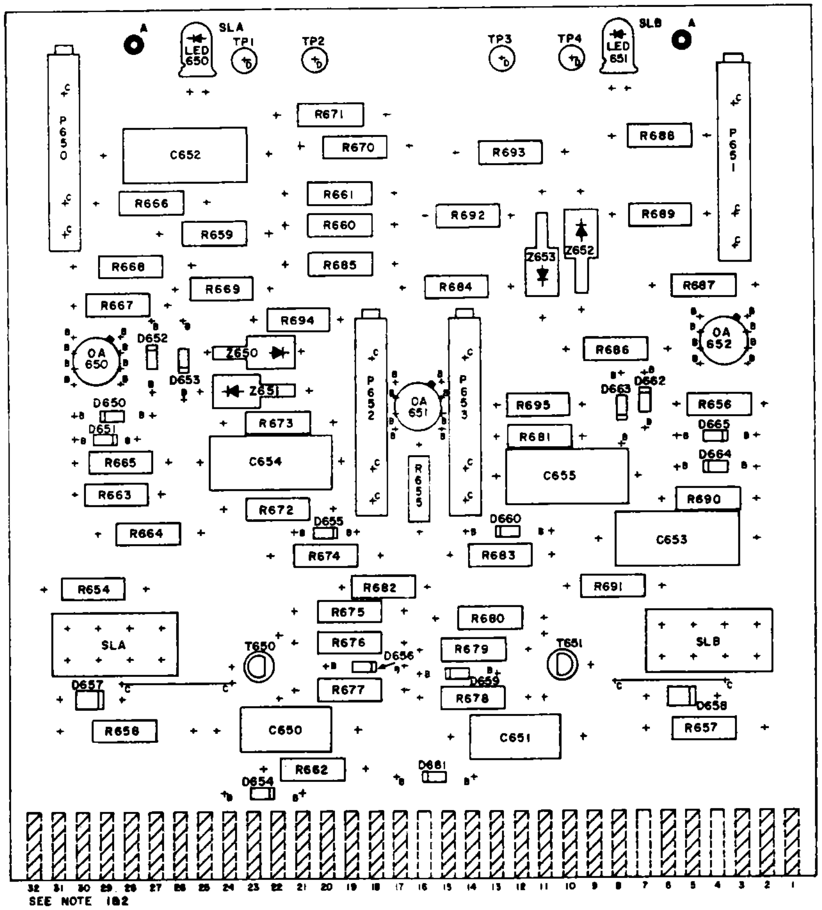

SEE NOTE 1&2

NOTES

1. INDICATED TAB NUMBERS CORRESPOND TO MATCHING RECEPTACLE NUMBERS.
2. CROSS HATCHED TABS INDICATES TABS USED.
3. CARD SIZE, $5.500^{+.000}_{-.015}$ X $6.150^{+.002}_{-.008}$
4. ALL TRANSISTORS & OP AMPS SHALL BE MOUNTED TO A .50 INCH MAXIMUM ABOVE THE CARD SURFACE AS SHOWN BELOW.

TRANSISTOR & OP AMP (SIDE VIEW)

TRANSISTOR LEAD SKETCHES

OP AMP LEAD SKETCH

GROUP	KEY LOCATIONS			
G02	30-31	24-25	12-13	6-7

CARD DIAGRAM 193X277ABG02

2X	36A353833AA004	1	—
SCALE	REAR ETCHED BOARD DWG.	FRONT	BACK
		SPACE UNIT REQUIREMENT	

REVISIONS

No revisions are to be made to this drawing without the specific approval of the Development Engineering Section of the Speed Variator Department.

PRINTS TO	
5B(6)M	5J(BW)
5R(2)BW	TS(50)
5L(2)BW	
AW(BW)	
5D(CD)	
JA(CD)	

PROPRIETARY INFORMATION OF THE GENERAL ELECTRIC COMPANY

MADE BY T. Foster March 14, 1978
ISSUED R. Baker MARCH 23, 1978
APPROVALS AB

SPEED VARIATOR PROD. DIV. OR DEPT.
ERIE, PA USA LOCATION

36C764133AB CONT ON SHEET FL SH NO 2

GENERAL ELECTRIC COMPANY — DIRECT CURRENT MOTOR & GENERATOR PRODUCTS DEPARTMENT
ERIE, PENNSYLVANIA 16531

GENERAL ELECTRIC

INSTRUCTIONS

GEK–24947

20 VOLT DC RELAY CARD

193X278AAG03

GENERAL ELECTRIC

20 VOLT DC RELAY

GENERAL

This instruction provides the basic information required to checkout the Relay Card. Refer to the system diagrams for information on how this card is used in the overall system.

DESCRIPTION

This card contains three relays. Each relay is 2PDT with a 20 volt DC coil which is polarity sensitive.

A front edge indicator which illuminates when current is flowing thru the coil is provided for each relay.

The relay contacts are rated 1 amp resistive, either 115V AC or 20V DC.

Pilot duty rating for 115V AC coils is 1.5 amps inrush, and .3 amps holding current.

The relay contacts are suitable for dry circuit switching as long as dry circuits and power circuits are not both switched in the same relay.

NOTE

A relay which has once been used to switch power circuits may not reliably switch dry circuits. When several cards have been furnished, insure that each card is returned to its own receptacle.

START–UP/CHECKOUT

Verify that the relays pick up and drop out at the appropriate time.

TROUBLESHOOTING

Verify the contacts are opening and closing properly when power is applied to the coil.

Verify that +20 is applied to the proper side of the coil.

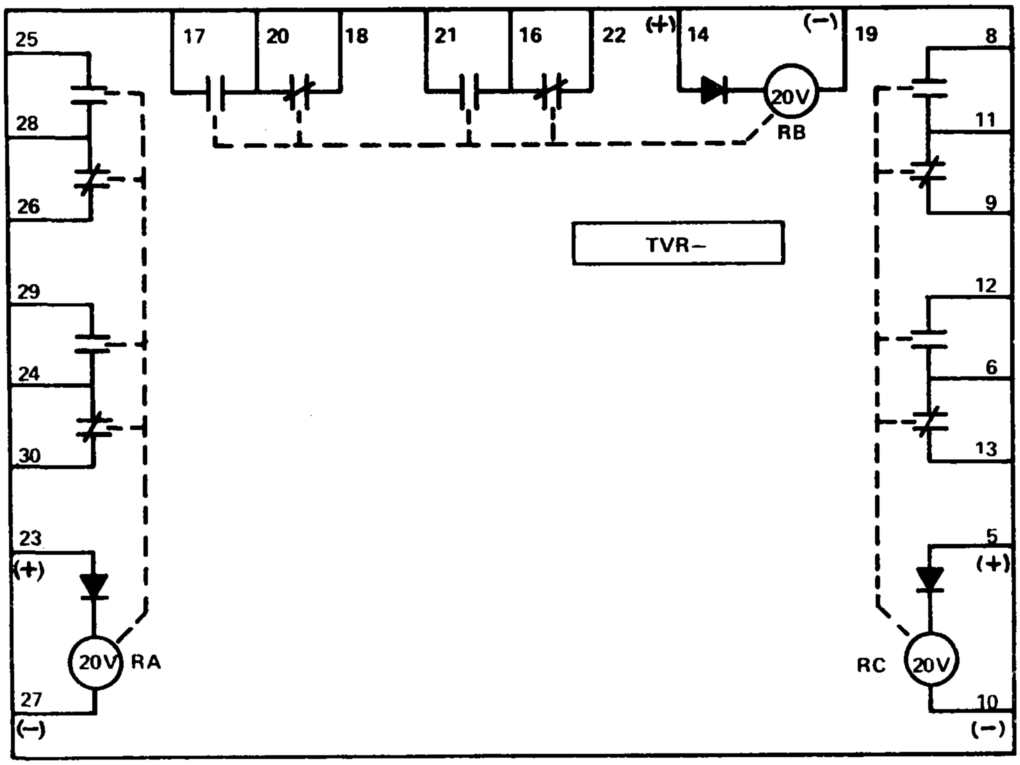
25
28
26
29
24
30
23
(+)
20V
RA
27
(−)
17
20
18
21
16
22
(+)
14
(−)
19
20V
RB
TVR−
8
11
9
12
6
13
5
(+)
RC
20V
10
(−)

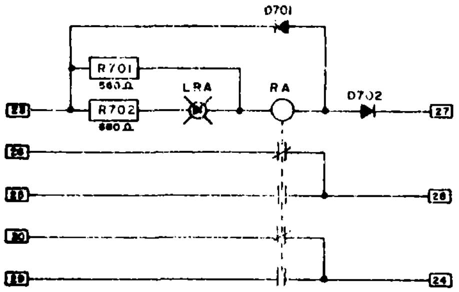

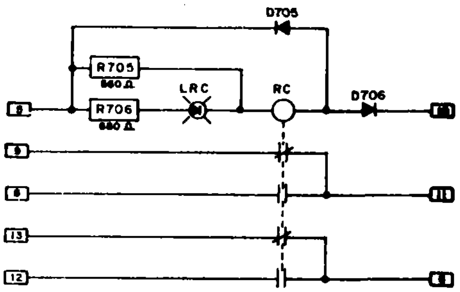

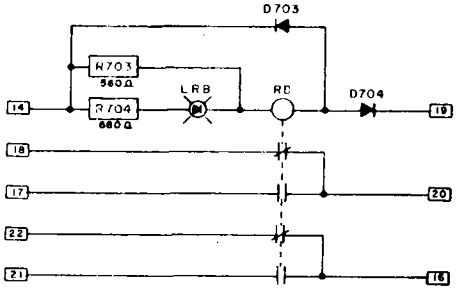

NOTES

TABLE I

CARD CATALOG NO.	QTY OF RELAYS	RELAY NOMENCLATURE	TAB CONNECTION
193X278AAG03	3	RA, RB, RC,	SEE SCHEMATIC ABOVE FOR TABS ASSOCIATED WITH RELAY NOMENCLATURE

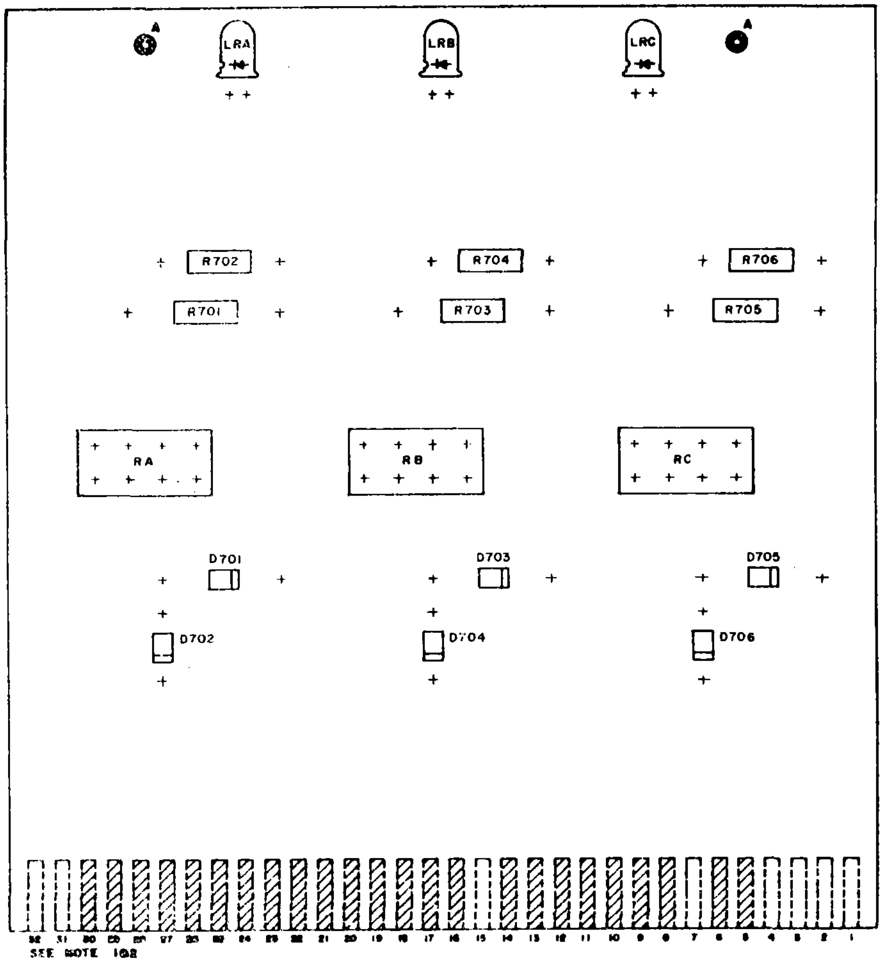

GROUP	KEY LOCATIONS			
G03	2-3	12-13	14-15	—

HOLE TABULATION

ALL HOLES .040 DIA. EXCEPT
THE HOLES TABULATED BELOW

LOC	DIA	QUAN
A	.157	2

NOTES

1. INDICATED TAB NUMBERS CORRESPOND TO MATCHING RECEPTACLE NUMBERS.
2. CROSS HATCHED TABS INDICATE TABS USED.
3. CARD SIZE,

$$5.500^{+.000}_{-.015} \times 5.130^{+.002}_{-.008}$$

GENERAL ELECTRIC COMPANY – DC MOTOR & GENERATOR DEPARTMENT

SPEED VARIATOR PRODUCTS OPERATION
ERIE, PENNSYLVANIA 16531

GENERAL ELECTRIC

GEK–24947 (9/78) 5M(F)

3.2.4-146

INSTRUCTIONS

GEK–24950

INSTRUMENT CARD, 193X295A_G01

GENERAL ELECTRIC

GEK-24950

Instruction

Instrument Card, 193X295A_G01

1.0 GENERAL

This instruction provides the basic information required to checkout the Instrument card. Refer to the system diagrams for information on how this card is used in the overall system.

2.0 DESCRIPTION

The Instrument card measures the DC voltage applied to the 19 switch selectable inputs.

2.01 The meter has three switch selectable voltage ranges: 3 volts, 12 volts and 30 volts, full scale. The movement is zero center with positive inputs reading above the zero line and negative inputs reading below the zero line.

2.02 Two output posts are provided for monitoring the selected input signal with external test equipment.

2.03 A fuse is provided in the common post circuit to help protect the drive against a misconnection at the output posts.

2.04 External voltages up to ±30 volts with respect to card common may be measured by switching the position selector switch to "E" and applying the signal to the output posts.

3.0 START-UP/CHECKOUT

Adjust the mechanical zero adjustment on the back of the meter so that the point is at zero when the card is in the rack.

4.0 TROUBLESHOOTING

The meter movement may be checked by switching to position "E" and connecting a 20 volt reference to the red output post.

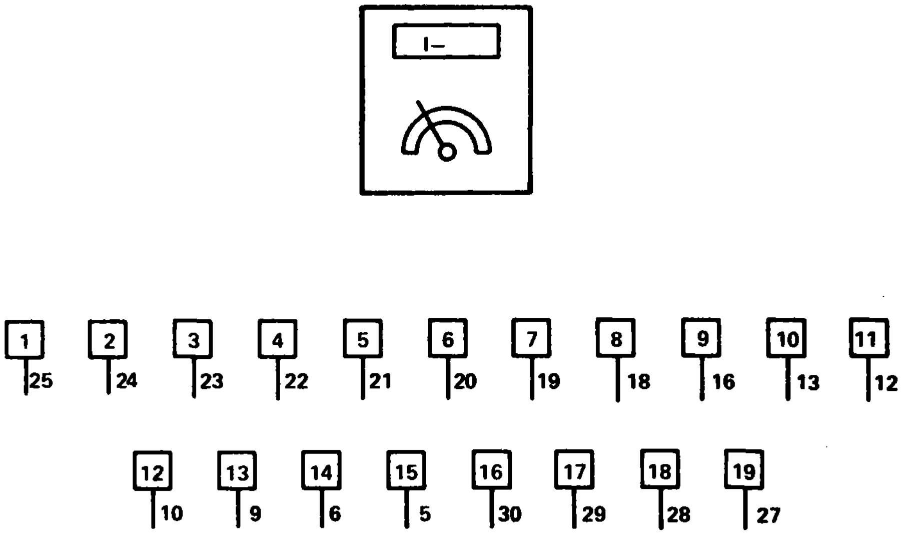

INSTRUMENT CARD RECEPTACLE CONNECTION AT TAB19
DIAL POSITION 7. UNDERLINED NOMENCLATURE DEFINES SIGNAL TEST

SCHEMATIC DIAGRAM

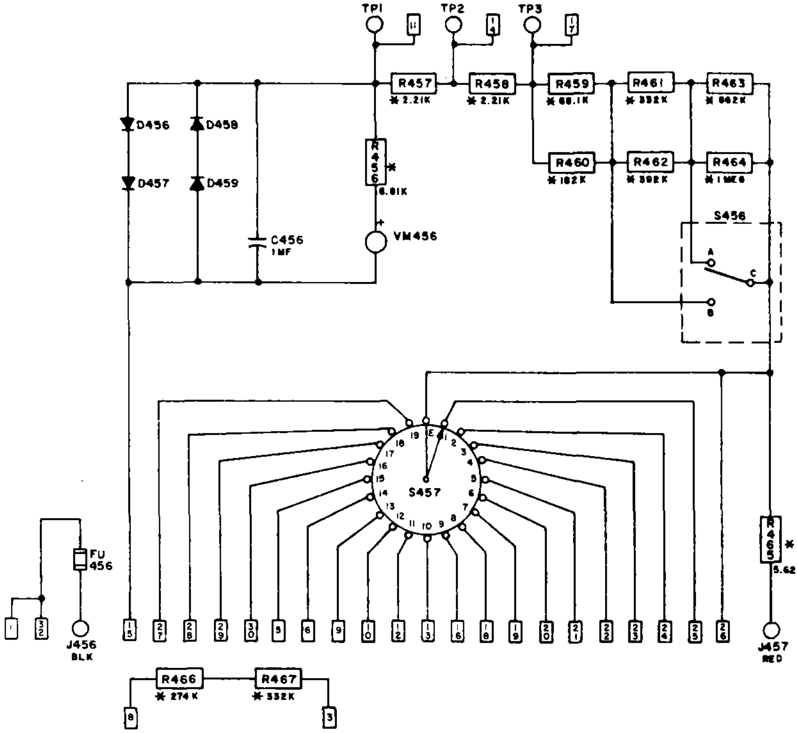

CARD COVER
BACK VIEW SHOWING LOCATION OF COMPONENTS & WIRING INFORMATION

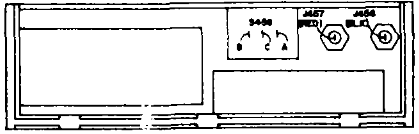

PRINTED CIRCUIT BOARD
FRONT VIEW SHOWING LOCATION OF COMPONENTS & WIRING INFORMATION

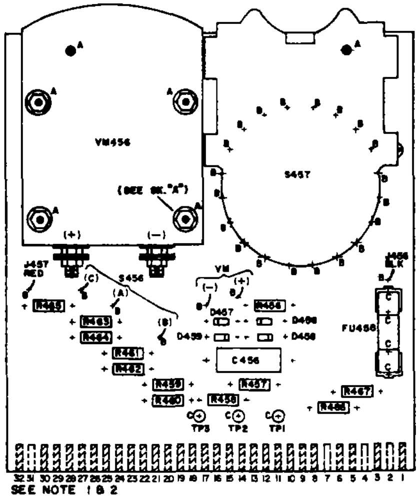

SEE NOTE 1 & 2

HOLE TABULATION

ALL HOLES .040 DIA. EXCEPT THE HOLES TABULATED BELOW

LOC.	DIA.	QUAN.
A	.157	6
B	.062	27
C	.081	7

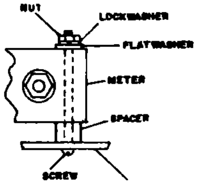

SKETCH "A"
MOUNTING OF METER TO PRINTED CIRCUIT BOARD

NOTES I. NUMBERS INSIDE RECTANGLES INDICATE TAB NUMBERS WHICH CORRESPOND TO MATCHING RECEPTACLE NUMBERS.

II. ✱ — DENOTES 1% RESISTOR

GROUP	KEY LOCATIONS			
G01	4 – 5	12 – 13	28-29	

NOTE 1. INDICATED TAB NUMBERS CORRESPOND TO MATCHING RECEPTACLE NUMBERS.

2. CROSS HATCHED TABS INDICATE TABS USED.

3. CARD SIZE, $5.500^{+.000}_{-.015}$ X $5.130^{+.002}_{-.008}$

4. ALL WIRING IS TERMINATED TO THE PRINTED CIRCUIT ON ONE END. THE OTHER WIRE TERMINATION IS DESIGNATED BY COMPONENT AND TERMINAL NEAR THE PRINTED CIRCUIT BOARD TERMINATION.

GENERAL ELECTRIC COMPANY — DIRECT CURRENT MOTOR & GENERATOR PRODUCTS DEPARTMENT
ERIE, PENNSYLVANIA 16531

GENERAL ELECTRIC

2M (1-78) (F)

INSTRUCTIONS

GEK-24960A

Time Delay Relay Card

193X543ACG01 & G02

GENERAL ELECTRIC

INSTRUCTIONS

TIME DELAY RELAY CARD
193X543ACG01, G02

WARNING

DISCONNECT ALL POWER TO THE DRIVE BEFORE REMOVING OR INSERTING A PRINTED CIRCUIT CARD. FAILURE TO DO SO MAY CAUSE SERIOUS INJURY TO PERSONNEL INCLUDING DEATH AND DAMAGE TO THE DRIVE AND DRIVEN MACHINERY.

GENERAL

This card contains two identical time delay relay channels. The output relays may be energized either from +20V, -20V, or 115V AC input signals. The time delay can be adjusted over three timing ranges from .1 second to 60 seconds. A ±20V external power supply is required. A light emitting diode is used to indicate relay energization.

Refer to the system instructions and elementary diagrams for external connections, on-card jumpers and time delay adjustments. The G01 card contains Channel A only.

NOTE

BEFORE REPLACING A DEFECTIVE CARD MAKE CERTAIN THE NEW CARD HAS THE CORRESPONDING CARD JUMPERS AND POTENTIOMETER SETTINGS. TEST FOR CORRECT RELAY OPERATION BEFORE INITIATING DRIVE SYSTEM OPERATION (SEE CARD TEST).

DESCRIPTION

RELAY

The relay is hermetically sealed having a 24V DC coil and qty (1) form C contacts. The resistive contact rating is 1A, 120V AC or 28V DC. The pilot duty rating is 0.8A inrush, 0.18A holding at 115V AC. The low level rating is 15mA minimum at 20V, DC, 5mA minimum at 115V AC.

INPUT

Standard: The input points are tab 12 for channel "A" and tab 17 for channel "B." The input resistance is 18K ohms with an RC time constant of 1.3 milliseconds for noise suppression. The input signals must be within the ranges of 85V AC to 130V AC or ±6V DC to ±130V DC.

Low Level: A low level DC input of 3.5V minimum may be applied to tabs 14 and 16. The input resistance at these points is 35K ohms.

ON—CARD JUMPERS

Card jumpers are used to select the timing range and delay sense according to the table below:

JUMPER CONNECTORS		
Channel A	Channel B	FUNCTION
FTA—FSA	FTB—FSB	.1 sec. to 1 sec.
LTA—FTA	LTB—FTB	.9 sec. to 10 sec.*
LTA—LCA	LTB—LCB	6 sec. to 60 sec.
PUA—DOA	PUB—DOB	pick-up & drop-out relay*
TDA—PUA	TDB—PUB	pick-up delay
TDA—DOA	TDB—DOB	drop-out delay

*These jumper connections are not required, but are used to hold jumpers for other possible connections.

ADJUSTMENT

The time delay is linear with respect to the setting of the single turn potentiometers, TMA and TMB. CW rotation increases the time delay.

CARD TEST

Test posts REF, RCA, TIA, RCB, TIB and COM along the card front can be used to check the card operation.

TIA and TIB can be used to monitor the input signals.

The voltage at RCA and RCB will change from -20V to about +4V to indicate proper coil excitation.

The electronic circuitry can be bypassed to energize the relay coils directly by connecting REF to RCA to pick up the "A" relay and REF to RCB to pick up the "B" relay.

Each channel can be tested with a DC test reference by connecting REF to TIA to energize the "A" channel and REF to TIB to energize the "B" channel.

REMOTE TIMING CONTROL

External timing control can be provided by using an op-amp limit circuit to reduce the integrator reference voltage to tab 13 for channel "A" and tab 20 for channel "B." Refer to the elementary diagrams for additional information if this feature is provided.

EXTENDED TIMING

Extended timing can be provided by connecting external capacitors between tabs 4 and 7 and/or tabs 23 and 26. Card jumpers are used to connect 1A—TA, 2A—FSA and/or 1B—TB, 2B—FSB.

ACCURACY

For a temperature change of 15°C at the card location, the time delay will change less than 1.5% of set timing.

INSTANTANEOUS OPERATION

The instantaneous operating time of the relay will be 20 milliseconds or less after the switching of the input signal.

OPERATION

The following is a brief operating description for channel "A." (The operation of channel "B" is identical.) Voltage levels referenced are approximate.

a) DOA jumpered to PUA for both pick-up and drop-out delay:

Following the application of an input signal.

—The TDA voltage will switch from about +15V to -15V.

—The RA voltage will switch from about +1V to -1V with the timing potentiometer, TMA, CW, and from +14V to -14V with the potentiometer CCW.

—The TA voltage will start ramping from -.5V towards +10V. When TA reaches +9.5V the RSA voltage will switch from +15V to -15V to turn on transistor T103 which energizes relay coil RLA and turns on the light emitting diode LED A. The RCA voltage will switch from -20V to +4V.

After removal of the input signal the TDA and RA voltages switch back to their positive levels and the TA voltage starts ramping down towards -.5V. When TA reaches about zero volts the RSA voltage switches positive and the relay drops out.

b) TDA jumpered to PUA for pick-up delay only:

The sequence is the same as in (a) except when the input is removed and the TDA voltage switches positive, the RSA voltage immediately switches positive to drop-out the relay within 20 milliseconds and force the TA voltage to -.5V.

c) TDA jumpered to DOA for drop-out delay only:

After an input signal is applied the TDA voltage switches negative to immediately (within 20 milliseconds) force the RSA voltage negative to pick up the relay and force the TA voltage to +10V.

The drop-out sequence is the same as described under (a).

POWER SUPPLY

The load on the ±20V power supply will be ±55 milliamps maximum per channel with the relay picked up.

TROUBLESHOOTING TIPS

Remove the card and visually inspect for damaged components or jumper connectors. Inspect the card receptacle for broken connections or shorted pin connectors.

Verify the presence of the ±20V supply voltages.

Check the card operation as described under **Operation** using the methods described under Card Test.

With the input applied and removed use an oscilloscope to check for noise at the input point, ±20V, TIA, TDA, RA, TA, RSA, RCA (or the corresponding channel "B" points).

If erratic operation or component failures should occur, check for sources of voltage transients like unsuppressed relay or contact coils.

Verify that the relay contacts do not exhibit high (or infinite) resistance when closed.

TIME DELAY RELAY - A

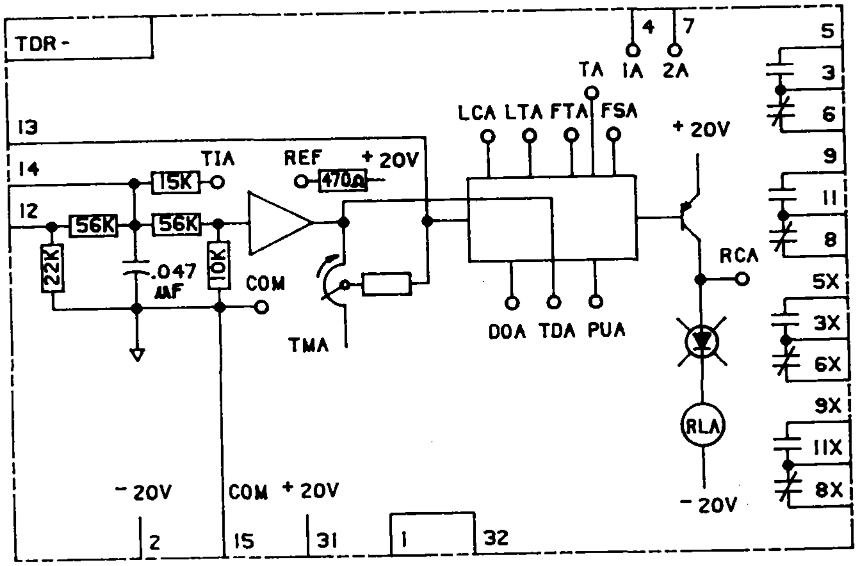

TIME DELAY RELAY - B
(G02 ONLY)

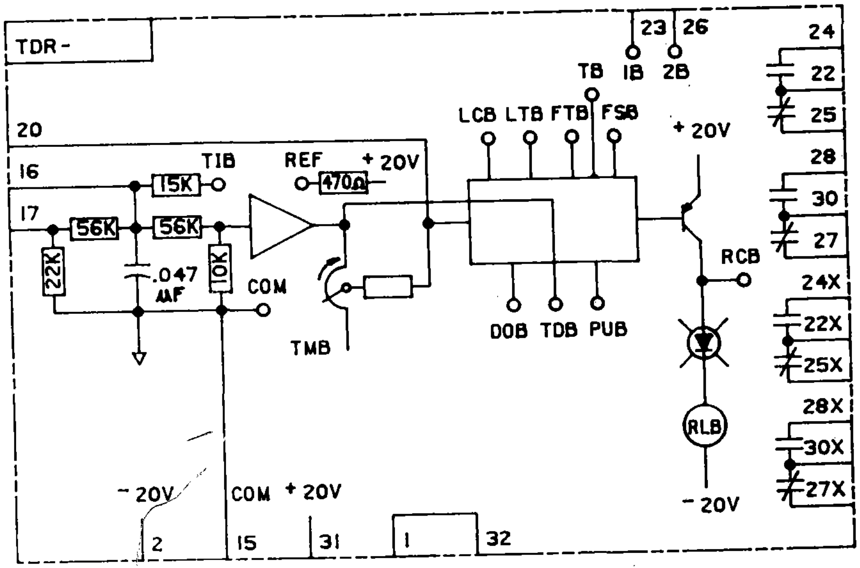

GENERAL ELECTRIC

36C764194AB

CONT ON SHEET 2 SH NO. 1

ELEMENTARY DIAGRAM
TIME DELAY RELAY

FIRST MADE FOR STANDARD LINE

193X543ACG01

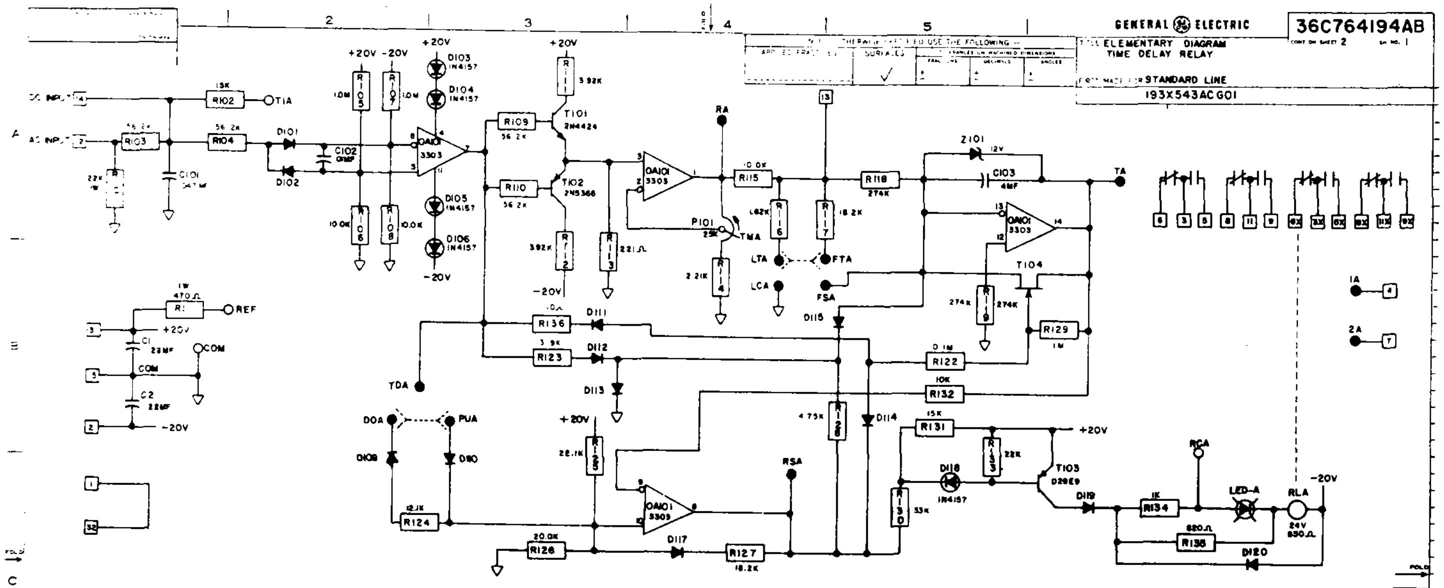

NOTE:

JUMPER CONNECTIONS	
PU-DO	PICK-UP & DROP-OUT DELAY
TD-PU	PICK-UP DELAY
TD-DO	DROP-OUT DELAY
FT-FS	.1-1 SEC
LT-FT	1-10 SEC
LT-LC	6-60 SEC

—○ TEST POST, CARD FRONT

—● JUMPER CONNECTOR

REVISIONS

No revisions are to be made to this drawing without the specific approval of the Development Engineering Section of the Speed Variator Department	1	D Lamb	CHG REV SV-921

PRINTS TO	
5B(8)M	5J(BW)
5R(2)BW	TS(BO)
5L(2)BW	
AW(BW)	
5D(CD)	
JA(CD)	

MADE BY D Lamb FEB 28, 1980

ISSUED FEB 28 1980

SPEED VARIATOR DIV OR DEPT

ERIE PA. U.S.A. LOCATION

36C764194AB

CONT ON SHEET 2 SH NO. 1

GENERAL ELECTRIC

36C764194AB
CONT ON SHEET FL SH NO 2

TITLE **PRINTED CIRCUIT DIAGRAM**
TIME DELAY RELAY CARD
FIRST MADE FOR **STANDARD LINE**
193X543ACG01

UNLESS OTHERWISE SPECIFIED USE THE FOLLOWING
APPLIED PRACTICES: 716A315
SURFACES: ✓
TOLERANCES ON MACHINED DIMENSIONS: FRACTIONS ± DECIMALS ± ANGLES ±

HOLE TABULATION

ALL HOLES 032 DIA. EXCEPT
THE HOLES TABULATED BELOW

LOC.	DIA.	QUAN.
A	.157	2
B	.040	101
C	.062	18
D	.070	16

NOTES

1. INDICATED TAB NUMBERS CORRESPOND TO MATCHING RECEPTACLE NUMBERS
2. CROSS HATCHED TABS INDICATES TABS USED.
3. CARD SIZE, $5.500^{+.000}_{-.016}$ X $5.130^{+.002}_{-.008}$
4. THIS CARD HAS GOLD PLATED TABS ON BOTH SIDES. TABS 1 THRU 32 ARE LOCATED ON THE REVERSE SIDE. TABS 1X THRU 32X ARE LOCATED ON THE COMPONENT SIDE OF THE CARD. TAB 1X IS OPPOSITE TAB 1 AND ETC. THE TAB NUMBERS SHOWN ARE THOSE USED ON THIS CARD.

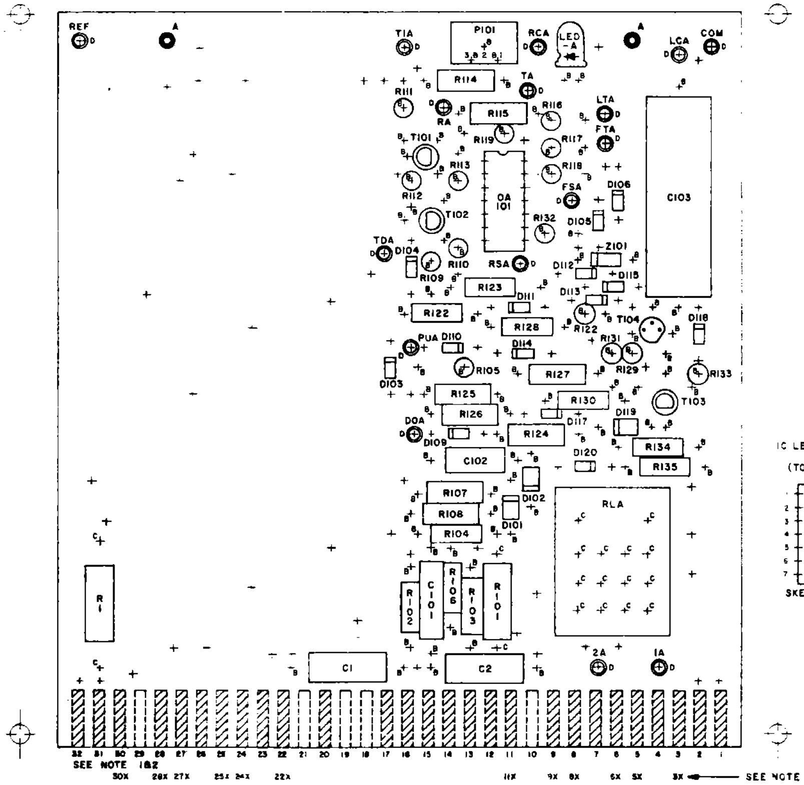

GROUP	KEY LOCATIONS			
G01	12-13	13-14	16-17	——

IC LEAD SKETCH

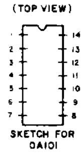

SKETCH FOR OA101

TRANSISTOR LEAD SKETCHES

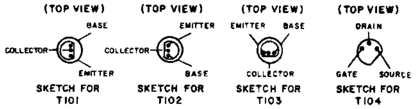

SKETCH FOR T101
SKETCH FOR T102
SKETCH FOR T103
SKETCH FOR T104

2X	36A358063AB005	36A358064AB005	2	——
SCALE	REAR ETCHED BOARD DWG.	FRONT ETCHED BOARD DWG.	FRONT	BACK
			SPACE UNIT REQUIREMENT	

REVISIONS

No revisions are to be made to this drawing without the specific approval of the Development Engineering Section of the Speed Variator Department

PRINTS TO	
5B(6)M	5J(BW)
5R(2)BW	T5(50)
5L(2)BW	
AW(BW)	
5D(CD)	
JA(CD)	

MADE BY Dianuh FEB. 28, 1980
ISSUED FEB 28,1980

speed variator
ERIE, PA., USA

36C764194AB
CONT ON SHEET FL SH NO 2

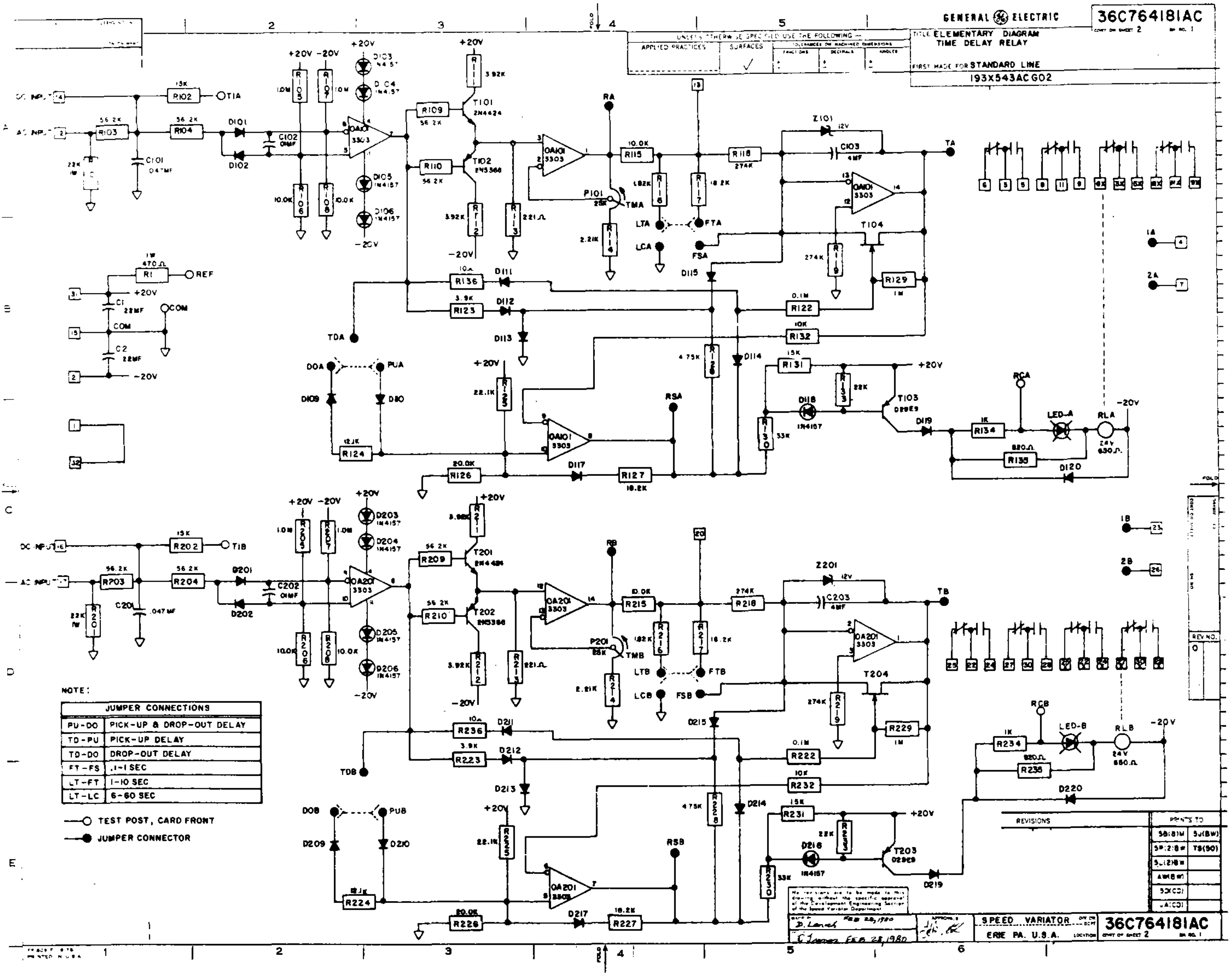

GENERAL ELECTRIC **36C764181AC**

CONT ON SHEET 2 SH NO. 1

UNLESS OTHERWISE SPECIFIED USE THE FOLLOWING —

APPLIED PRACTICES	SURFACES	TOLERANCES ON MACHINED DIMENSIONS		
		FRACTIONS	DECIMALS	ANGLES
	✓	±	±	±

TITLE ELEMENTARY DIAGRAM
TIME DELAY RELAY

FIRST MADE FOR STANDARD LINE

193X543AC G02

NOTE:

JUMPER CONNECTIONS	
PU-DO	PICK-UP & DROP-OUT DELAY
TD-PU	PICK-UP DELAY
TD-DO	DROP-OUT DELAY
FT-FS	.1-1 SEC
LT-FT	1-10 SEC
LT-LC	6-60 SEC

—○ TEST POST, CARD FRONT

—● JUMPER CONNECTOR

REVISIONS

PRINTS TO	
58(8)M	5J(BW)
5P(2)BW	TS(50)
5J(2)BW	
AW(BW)	
5D(CD)	
JA(CD)	

No revisions are to be made to this drawing without the specific approval of the Development Engineering Section of the Speed Variator Department

MADE BY D. Lanek FEB 28, 1980

C Jones FEB 28, 1980

APPROVED

SPEED VARIATOR DIV OR DEPT

ERIE PA. U.S.A. LOCATION

36C764181AC

CONT ON SHEET 2 SH NO. 1

GENERAL ELECTRIC

36C764181AC
CONT ON SHEET FL SH NO 2

UNLESS OTHERWISE SPECIFIED USE THE FOLLOWING				
APPLIED PRACTICES	SURFACES	TOLERANCES ON MACHINED DIMENSIONS		
		FRACTIONS	DECIMALS	ANGLES
710A515	✓	±	±	±

PRINTED CIRCUIT DIAGRAM
TIME DELAY RELAY CARD
FIRST MADE FOR STANDARD LINE
193X543ACG02

HOLE TABULATION

ALL HOLES 032 DIA. EXCEPT THE HOLES TABULATED BELOW

LOC.	DIA.	QUAN
A	157	2
B	.040	158
C	.062	34
D	.070	30

NOTES

1. INDICATED TAB NUMBERS CORRESPOND TO MATCHING RECEPTACLE NUMBERS
2. CROSS HATCHED TABS INDICATES TABS USED.
3. CARD SIZE. 5 500$^{+.000}_{-.015}$ X 5.130$^{+.002}_{-.008}$
4. THIS CARD HAS GOLD PLATED TABS ON BOTH SIDES. TABS 1 THRU 32 ARE LOCATED ON THE REVERSE SIDE. TABS 1X THRU 32X ARE LOCATED ON THE COMPONENT SIDE OF THE CARD. TAB 1X IS OPPOSITE TAB 1 AND ETC. THE TAB NUMBERS SHOWN ARE THOSE USED ON THIS CARD.

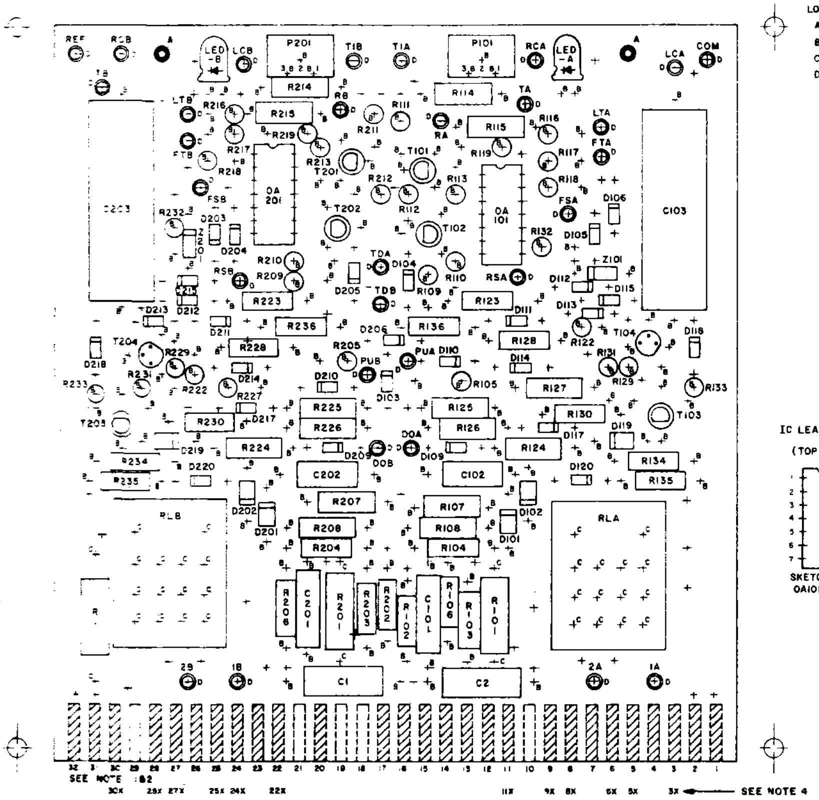

GROUP	KEY LOCATION			
G02	12 – 13	13 – 14	16 – 17	18 – 19

IC LEAD SKETCH

(TOP VIEW)

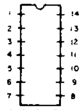

SKETCH FOR
OA101, OA201

TRANSISTOR LEAD SKETCHES

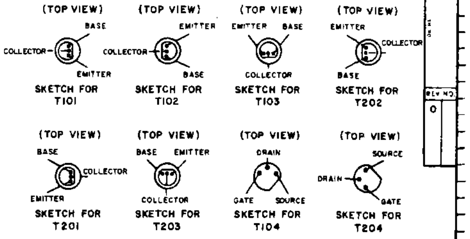

SKETCH FOR T101
SKETCH FOR T102
SKETCH FOR T103
SKETCH FOR T202
SKETCH FOR T201
SKETCH FOR T203
SKETCH FOR T104
SKETCH FOR T204

2X	36A358063AB005	36A358064AB005	2	—
SCALE	REAR ETCHED BOARD DWG.	FRONT ETCHED BOARD DWG.	FRONT	BACK
			SPACE UNIT REQUIREMENT	

REV NO.
0

REVISIONS

No revisions are to be made to this drawing without the specific approval of the Development Engineering Section of the Speed Variator Department

PRINTS TO	
SB(8)M	SJ(BW)
SR(2)BW	TS(SO)
SL(2)BW	
AW(BW)	
SD(CO)	
JA(CO)	

MADE BY D Lamick FEB 28, 1980
ISSUED FEB 28, 1980
APPROVALS

speed variator
ERIE, PA., USA

36C764181AC
CONT ON SHEET FL SH NO 2

GENERAL ELECTRIC COMPANY — DC MOTOR & GENERATOR DEPARTMENT
SPEED VARIATOR PRODUCTS OPERATION
ERIE, PENNSYLVANIA 16531

GENERAL ELECTRIC

GEK-24960A (9/80) 2M (P)

CONTROL

INSTRUCTIONS—J 600 LINE CIRCUIT BREAKERS

GEH-3035A
Supersedes
GEH-3035

Installation Instructions

TRIP UNITS — FRONT CONNECTED LUGS

Type TJK, 2- and 3-pole **Type THJK, 2- and 3-pole**

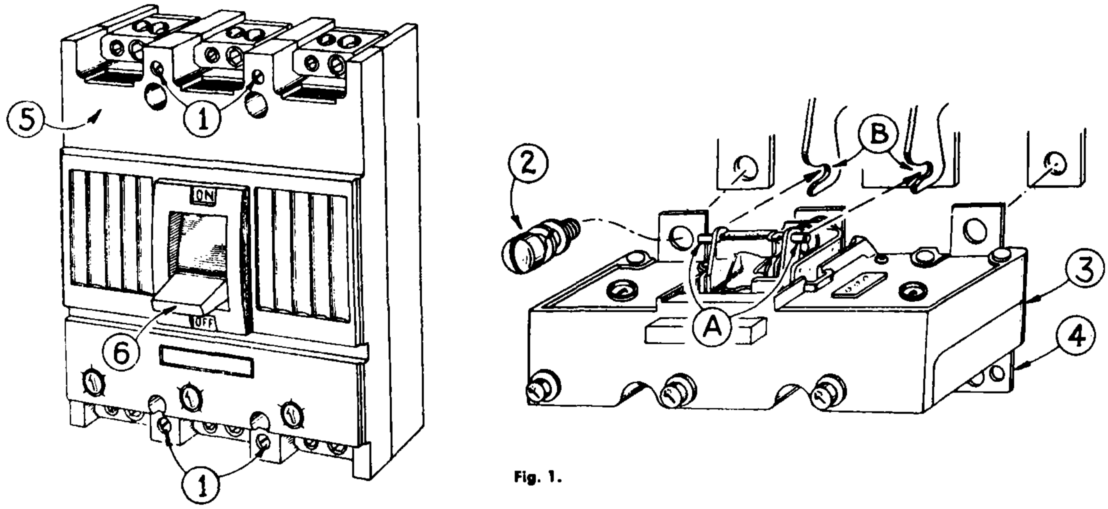

Fig. 1.

DESCRIPTION

The J 600 circuit breaker is designed to open an electrical circuit under normal or abnormal conditions without injury to itself when applied within its interrupting capabilities.

The trip unit kit consists of the rated trip mechanism. Mounting hardware for the line end of the trip unit is included with the breaker frame.

The non-automatic unit is similar to the rated mechanism in appearance.

Trip units with Catalog Numbers TJK636T, 250 through 600 amperes, are to be used in frames TJK626F000 and TJK636F000 only.

Trip units with Catalog Numbers TJK436T, 125 through 400 amperes, are to be used in frames TJK426F000 and TJK436F000 only.

INSTRUCTIONS

Automatic Trip and Non-automatic Units Installation of a Trip Unit in a Two- or Three-pole Frame

See Fig. 1.

① Remove each of four breaker frame cover screws and remove frame cover.

② Insert a #3/8-16 slotted screw with lock washer and plain washer (furnished with breaker frame) into the left and right line-conductor holes of the trip unit. Mounting hardware for the center line-conductor is factory-assembled.

③ Place the trip unit in the breaker frame, engaging guide pins A with slots B. Start each line-conductor screw. Flex the trip unit as necessary to align the load lug terminal holes. (This can be done by inserting a screwdriver into the holes and gently forcing alignment.) Tighten the center screw, then tighten the other two line-conductor screws.

④ Fasten the load lugs. See lug information on reverse side of this page.

⑤ Replace and secure the breaker frame cover.

⑥ Set the circuit breaker by pushing the breaker handle to the extreme OFF position. Then move the handle to the ON position.

Note: Non-automatic trip unit kits contain an aluminum label which must be attached to the front of the breaker covering the spaces for the magnetic adjustment knobs.

Removal of a Trip Unit from a Two- or Three-pole Frame

See Fig. 1.

Push circuit breaker handle to OFF position. Be sure circuit to breaker is de-energized.

1. Remove each of four breaker frame cover screws ① and remove cover ⑤.
2. *IMPORTANT SAFETY PRECAUTION:* The circuit breaker must be in the "TRIPPED POSITION" (breaker handle mechanism midpoint between "OFF" and "ON") before removing the trip unit. The bottom (load end) of the trip unit has a small hole marked "Trip Here". Insert a .060 diameter or smaller pin (paper clip) into this hole and push to trip the circuit breaker.

GENERAL ELECTRIC

3. Unfasten trip unit's line and load connections.
4. Lift trip unit out of breaker frame, dis-engaging pins A from slots B.

Installation of Front Connected Lugs

See Fig. 2.

1. Insert two pan head screws and lock washers (furnished) in lug.
2. Place lug and inserted screws in breaker frame with stamped lug information visible on outside of breaker.
3. Secure each pan head screw.
4. Feed in copper or aluminum cable.
5. Secure cable connection to lug with hex socket screws (furnished).

NOTE: For 400 ampere rating and below use lugs with Catalog Number TCAL 43.

For 500 and 600 ampere rating, use lugs with Catalog Number TCAL 63.

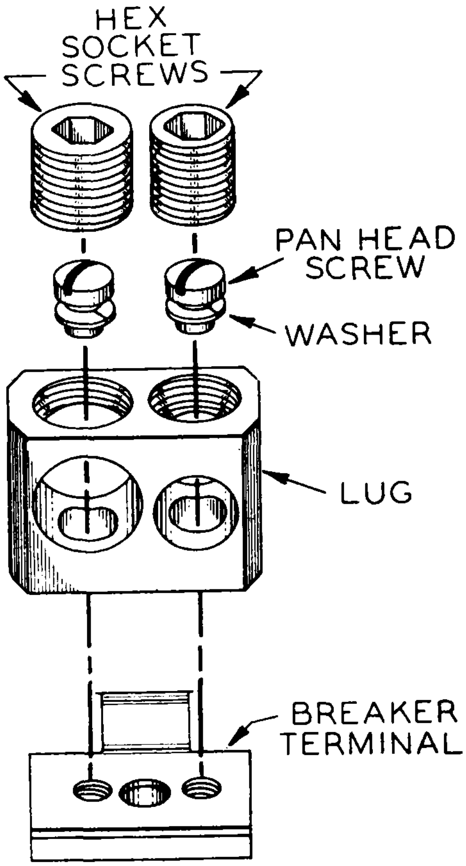

GENERAL ELECTRIC
CIRCUIT PROTECTIVE DEVICES DEPARTMENT, PLAINVILLE, CONNECTICUT

GEH-3246A

control

INSTRUCTIONS

NEMA SIZE 0

CR 205 magnetic contactors
CR 206 magnetic starters

DESCRIPTION

General Electric 200-Line full voltage magnetic motor starters include an open or enclosed magnetic contactor and a three-leg block overload relay, providing motor protection against running and stalled motor overloads. Separate motor branch circuit overcurrent protection against electrical faults should be supplied in accordance with the National Electrical Code.

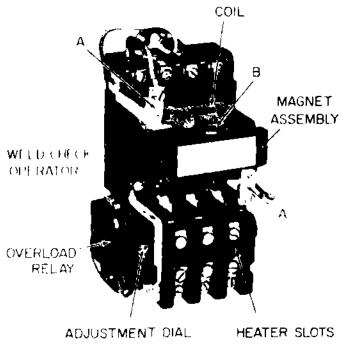

FIGURE 1

RATINGS

Max Voltage	Contactor Max Current Rating	AC Volts	Max HP for AC motors	
			Single phase	Poly-phase
600	20 amp (open) 18 amp (enclosed)	115 200 230 460-575	1 - 2 -	- 3 3 5

EASE OF INSTALLATION

Three-point mounting, straight-through wiring saves time, makes installation easy. Before connecting starter to power supply:

1. Remove all packing.
2. Clean magnet mating surfaces of any dirt or foreign matter.
3. Install overload relay heater(s). To prevent overloading the starter, do not select heaters for a motor of a larger rating than given on the starter nameplate. Select heater(s) in accordance with heater table, which accompanies each starter unit.
4. Operate movable magnet and operating arm by pressing on the nameplate to assure free movement.
5. Mount starter on a sturdy vertical support.
6. Make electrical connections, which are quick and convenient, due to 12 knockouts provided in NEMA 1 enclosures, straight through wiring and pressure terminals.
7. The 3-leg block overload relay, included on the starter, is furnished from the factory adjusted for manual reset. (Shift lever is in upper slot.) The relay may be adjusted for automatic reset by positioning lever in lower slot.

CAUTION: Overload relays, when adjusted for automatic reset, should not be used with two-wire, maintained contact pilot devices such as pressure, float and limit switches, as inadvertent restarting of the motor can occur.

EASY COIL REMOVAL

(* REFER TO FIGURE 3)

The encapsulated coil is impervious to moisture, contaminants and oil. It resists mechanical damage and failures due to high humidity. No tools are required to remove coil.

1. Remove power from device.
2. Press against coil while pulling up slightly on coil retainers (A-Figure 1) and move retainers away from coil.
3. Withdraw magnet assembly, coil, molded cover and movable arm from device.
4. Withdraw spring clip (B-Figure 1) and remove armature from movable arm.
5. Remove coil from magnet.
6. Reassemble device by reversing procedure.

QUICK CONTACT REMOVAL

Movable contacts can be inspected and replaced in seconds-without tools.

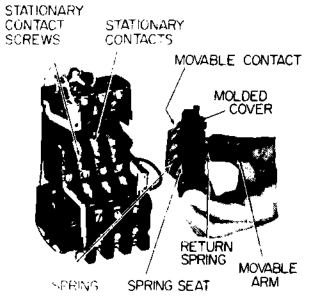

FIGURE 2

1. Perform steps 1 through 5 under "EASY COIL REMOVAL".
2. Remove magnet from molded cover and movable arm.
3. Remove return spring from center of movable arm.
4. Remove molded cover from movable arm.
5. Depress and slide movable contact, spring and spring seat from movable arm.
6. Remove screws holding stationary contacts in place and remove stationary contacts.
7. Reassemble device by reversing procedure.

NOTE: For starters with one or more normally closed contacts, perform steps 1 and 2 shown under "EASY COIL REMOVAL". Withdraw spring clip (B-Figure 1) and remove armature, coil and magnet from device. Remove return spring from center of movable arm. Remove molded cover and stationary contacts before lifting movable arm from device.

NORMALLY CLOSED CONTACTS

The contact on this device may be converted from normally open to normally closed with no additional parts. Perform steps 1 through 4 shown under "EASY COIL REMOVAL". Lift coil and magnet from movable arm. Remove return spring from center of movable arm. Remove molded cover from

GENERAL ELECTRIC

movable arm. Depress movable contact spring and spring seat against movable contact and rotate these parts ½ turn without removing them from window. Remove the stationary contacts. Install the movable arm in the device. Install the stationary contacts so that their silver pads face the movable contact silver pads.

Reassemble the device. To change contacts from normally closed to normally open, reverse the above procedure.

CHECK FOR WELDED CONTACTS IN OVERLOAD RELAY

This feature permits the maintenance man to check for welded relay contacts by simply depressing the brown operator located at the top of the overload relay contact housing. When the relay is in a reset condition, an audible "click" will be heard when the operator is depressed, indicating that the contacts are operating normally. A continuity check can also be made by disconnecting the control wiring from the terminals of the relay and placing a bell set or a resistance measuring instrument in the circuit. Connecting either of these across the relay terminals will indicate the relay contact is closed until the contact-check operator is depressed, interrupting the circuit.

The exclusive manual contact-operation check gives positive assurance that contacts have not welded due to short circuits in the control wiring.

SIMPLE MAINTENANCE

200-Line starters and contactors require virtually no corrective maintenance. Preventive maintenance will assure many years of dependable on-line service.

1. Always remove power from device before performing any maintenance.
2. Keep magnet mating surfaces free of accumulated dirt or dust.
3. DO NOT OIL OR GREASE the magnet mating surfaces.
4. Contacts are carefully designed for maximum life. They need only be replaced when nearly all the silver tip is gone and the contact tip support is exposed. DO NOT FILE the contacts. Filing or otherwise dressing the contacts only results in lost tip material and reduces contactor or starter life.
5. The ultimate tripping current of the installed relay heater can be adjusted ±10% by using adjustment dial shown in Fig. 1.

COIL DATA (Order 55-15D21G plus no. per table below)

Frequency	115V	200/ 208V	230V	460V	575V	600V
60 Hz	2	23	3	4	5	6
Frequency	110V	220V	380V	440V	550V	600V
50 Hz	7	8	4	9	10	11

Use 22 for 120V, 60 Hz/110V, 50 Hz coil.

ACCESSORY KITS

1st. Aux. Cont. N.O. for CR205, 206	CR205X100A
1st. Aux. Cont. N.C. for CR205, 206	CR205X100B
1st. Aux. Cont. N.O.-N.C. for CR205, 206	CR205X100C
Additional N.O. Aux. Cont. for All Forms	CR205X100D
Additional N.C. Aux. Cont. for All Forms	CR205X100E
Push Button	CR205X120N
Selector Switch H-O-A	CR205X130N
Selector Switch OFF-ON	CR205X130P
Indicating Light	CR205X150N
Fifth Pole	CR205X111B

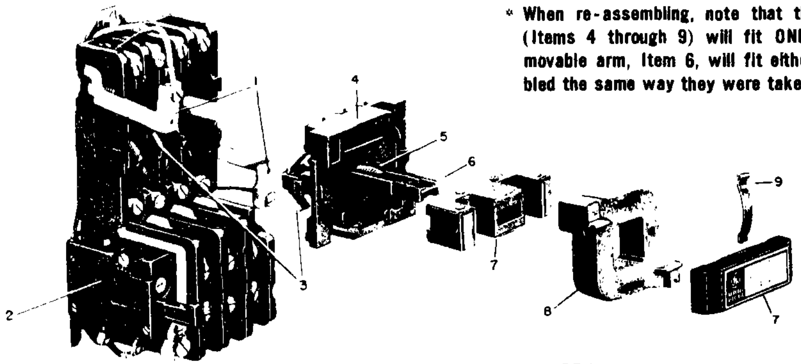

*** When re-assembling, note that the magnet and movable arm assembly (Items 4 through 9) will fit ONLY ONE WAY. The magnet, Item 7, and movable arm, Item 6, will fit either way but will be quieter if re-assembled the same way they were taken apart.**

FIGURE 3

PRINCIPAL RENEWAL PARTS

Ref. No.	Description	Part Number	Quantity Required	
			CR205	CR206
1	Coil retainer assembly	546A301G8	2	2
2	Overload relay (3-heater, non compensated form)	CR224C310F	-	1
3	Set of stationary and movable contacts with springs and serews for 4 poles	546A300G2	1	1
4	Molded cover for stationary and movable contacts	546A301G12	1	1
5	Return spring for movable contact support	541A278P1	1	1
6	Molded movable contact support 2, 3, 4 pole	187D350P1	1	1
7	Armature and frame (magnet)	546A301G5	1	1
8	Operating coil	55-15D21G **	1	1
9	Spring retainer for armature	546A588P1	1	1

** Add Suffix numbers for particular coil rating required. See COIL TABLE above.

GENERAL ELECTRIC COMPANY
GENERAL PURPOSE CONTROL PRODUCTS DEPARTMENT
BLOOMINGTON, ILLINOIS 61701

GENERAL ELECTRIC

10/72

PRINTED IN U S A

GEH-3645B

control

INSTRUCTIONS

NEMA SIZE 5

CR 205 magnetic contactors
CR 206 magnetic starters

DESCRIPTION

General Electric 200-Line full voltage magnetic motor starters include an open or enclosed magnetic contactor and a three-leg block overload relay, providing motor protection against running and stalled motor overloads. Separate motor branch circuit overcurrent protection against electrical faults should be supplied in accordance with the National Electrical Code.

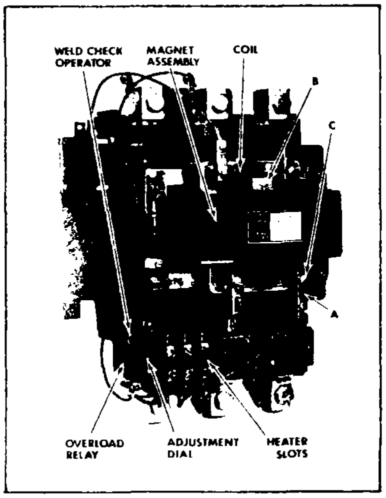

FIGURE 1

RATINGS

Max Voltage	Contactor Max. current rating	AC Volts	Max HP for AC motors
			Polyphase
600	300 amp (open) 270 amp (enclosed)	200 230 460-575	75 100 200

EASE OF INSTALLATION

Straight-through wiring saves time, makes installation easy. Before connecting starter to power supply;

1. Remove all packing.
2. Clean magnet mating surfaces of any dust or foreign matter.
3. Install overload relay heaters. To prevent overloading the starter, do not select heaters for a motor of a larger rating than given on the starter nameplate. Select heaters in accordance with heater table, which accompanies each device. **CAUTION: Do not energize starter before heaters are installed.**
4. Operate movable magnet and operating arm by pressing on the nameplate to assure free movement.
5. Mount starter on a sturdy vertical support.
6. Make electrical connections, which are quick and convenient, due to 10 knockouts provided in NEMA 1 enclosure, straight through wiring and pressure terminals.
7. The 3-leg block overload relay, included on the starter, is furnished from the factory adjusted for manual reset. (Shift lever is in upper slot). The relay may be adjusted for automatic reset by positioning lever in lower slot.

CAUTION: Overload relays, when adjusted for automatic reset, should not be used with two-wire, maintained contact pilot devices such as pressure, float and limit switches, as inadvertent restarting of the motor can occur.

EASY COIL REMOVAL

The encapsulated coil is impervious to moisture, contaminants and oil. It resists mechanical damage and failures due to high humidity.

1. Remove power from device.
2. Pull one end of the spring clip (B-Fig. 1) forward and slide it out of the slot.
3. Remove movable portion of magnet assembly.
4. Loosen 4 coil retainer screws (C-Fig. 1). Press against coil and pull up and out on coil retainers (A-Figure 1).
5. Remove coil from magnet.

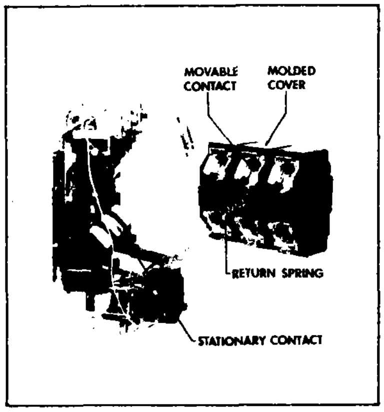

FIGURE 2

6. Re-assemble, reversing the above procedure.

QUICK CONTACT REMOVAL

Movable contacts can be inspected and replaced in seconds.

1. Perform steps 1 through 5 under "EASY COIL REMOVAL".
2. Remove complete magnet assembly by grasping magnet retaining straps and pull entire assembly from the contactor assembly.
3. With the magnet assembly resting on its side, remove the movable arm by sliding it out the back of the assembly.
4. Depress movable contact and spring and slide movable contact from movable arm.
5. Remove screws holding stationary contact in place and remove stationary contact.
6. Re-assemble by reversing the above procedure.

NOTE: Do not attempt to remove or replace arc traps in arc chute cover.

When re-assembling note that the arc chute cover will only fit one way. Magnet and movable arm will fit either way but will be quieter if re-assembled the same way they were taken apart.

GENERAL ELECTRIC

CHECK FOR WELDED CONTACTS IN OVERLOAD RELAY

This feature permits the maintenance man to check for welded relay contacts by simply depressing the brown operator located at the top of the overload relay contact housing. When the relay is in a reset condition, an audible "click" will be heard when the operator is depressed, indicating that the contacts are operating normally. A continuity check can also be made by disconnecting the control wiring from the terminals of the relay and placing a bell set or a resistance measuring instrument in the circuit. Connecting either of these across the relay terminals will indicate the relay contact is closed until the contact-check operator is depressed, interrupting the circuit.

The exclusive manual contact-operation check gives positive assurance that contacts have not welded due to short circuits in the control wiring.

SIMPLE MAINTENANCE

200-Line starters and contactors require virtually no corrective maintenance. Preventive maintenance will assure many years of dependable on-line service.

1. Always remove power from device before performing any maintenance.
2. Keep magnet mating surfaces free of accumulated dirt or dust.
3. DO NOT OIL OR GREASE the magnet mating surfaces.
4. Contacts are carefully designed for maximum life. They need only be replaced when nearly all the silver tip is gone and the contact tip support is exposed. DO NOT FILE the contacts. Filing or otherwise dressing the contacts only results in lost tip material and reduces contactor or starter life.
5. The ultimate tripping current of the installed relay heater can be adjusted the ±10% by using adjustment dial shown in Figure 1.

COIL DATA (Order 55-501493G plus no. per table below)

Frequency	115V	200/ 208V	230V	460V	575V	600V
60 Hz	2	23	3	4	5	6
Frequency	110V	220V	380V	440V	550V	600V
50 Hz	7	8	4	9	10	11

Use 22 for 120V, 60 Hz/110V, 50 Hz coil.

ACCESSORY KITS

1st. Aux. Cont. N.O. for CR205, CR206 (Right Side Mounting)	CR205X500A
1st. Aux. Cont. N.C. for CR205, CR206 (Right Side Mounting)	CR205X500B
1st. Aux. Cont. N.O.-N.C. for CR205, CR206 (Right Side Mounting)	CR205X500C
Additional N.O. Aux. Cont. for All Forms	CR205X100D
Additional N.C. Aux. Cont. for All Forms	CR205X100E
Push Button	CR205X520B
Selector Switch H-O-A	CR205X530B
Selector Switch OFF-ON	CR205X530D
Indicating Light	CR205X550B

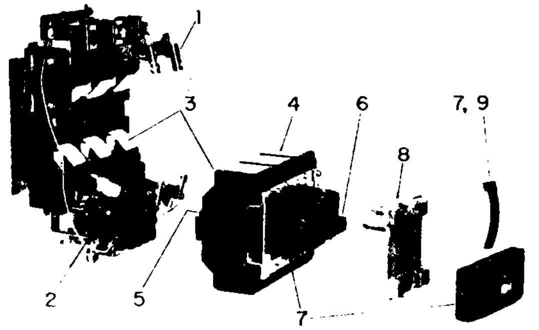

PRINCIPAL RENEWAL PARTS

Ref. No.	Description	Part Number	Quantity Required	
			CR205	CR206
1	Coil retainer assembly	55-154607G3	4	4
2	Overload relay (3-heater, non-compensated form)	CR224G310F	-	1
3	Set of stationary and movable contacts with springs and screws for 3 poles	55-154607G2	1	1
4	Molded cover for stationary and movable contacts	55-501448G1	3	3
5	Return spring for movable contact support	55-153205G1	1	1
6	Molded movable contact support with return spring 2, 3 pole	55-154607G10	1	1
7	Armature and frame (magnet) with retainer	55-154607G4	1	1
8	Operating coil	55-501493G **	1	1
9	Spring retainer for armature	55-502270G1	1	1

** Add Suffix numbers for particular coil rating required. See COIL TABLE above.

GENERAL ELECTRIC COMPANY
GENERAL PURPOSE CONTROL PRODUCTS DEPARTMENT
BLOOMINGTON, ILLINOIS 61701
11/72

GENERAL ELECTRIC

PRINTED IN U. S. A.

GEH-4115

control

INSTRUCTIONS

CR120B industrial relay

DESCRIPTION

General Electric's CR120B 600 volt multi-circuit industrial relay line includes the basic magnetic relay, a solid-state timer attachment and latch attachment. These units plus contact modules and mounting accessories provide for maximum flexibility.

RATINGS

Max. AC Voltage	Max. Continuous Current	Max. Volt-Ampere Rating		Max. Current Rating	
		Make	Break	Make	Break
600	10 Amp	7200	720	60	6

INSTALLATION

Two-point mounting and straight-through wiring saves time and makes installation easy. Before connecting the relay to the power supply:

1. Remove all packing.
2. Operate the magnet and operating arm by pulling the manual operator to assure free movement.
3. Mount the relay on a vertical panel.
4. Make all electrical connections. Normally open contacts are indicated by green, and normally closed by white.

COIL REMOVAL

(Refer to Figure 2.) The encapsulated coil is impervious to moisture, contaminants and oil. It resists mechanical damage and failures due to high humidity.

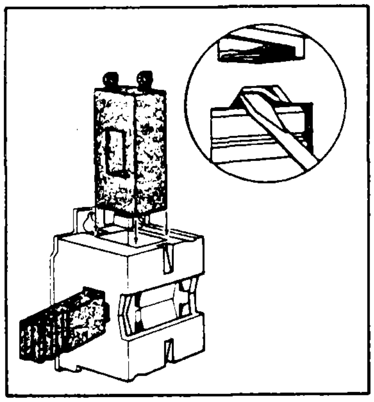

FIGURE 2

1. Disconnect power from the device.
2. Insert a screwdriver blade between magnet and magnet retaining clip. Twist blade to force retaining clip away from magnet. Push down on screwdriver, dislodging magnet; then applying firm pressure with screwdriver push magnet through coil to position shown in Figure 2.
3. Grasp the coil terminals and pull out.

TO REASSEMBLE:

4. Insert coil and center in housings.
5. Slide magnet back through coil and center with housing window. Using thumbs to apply pressure, snap magnet back into position under retaining clip. Magnet must be centered in housing window in order for it to seat properly.

QUICK CONTACT REMOVAL/CONVERSION

Contact modules may be removed, inspected, converted from normally open to normally closed or replaced using only a screwdriver.

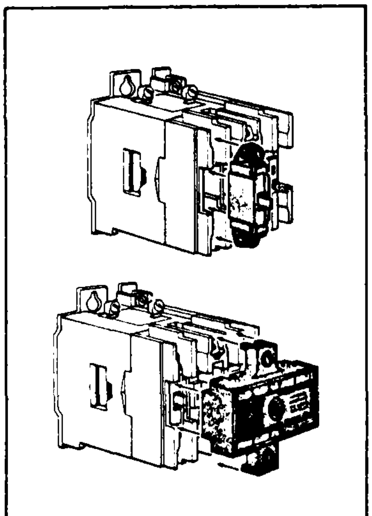

FIGURE 3

1. Disconnect power from the device.
2. Loosen cover screws and remove cover.
3. Lift out contact module. Contacts may be inspected through green transparent side of module.
4. To convert contact from normally open to normally closed or normally closed to normally open:
   a. Remove contact module terminal screws and reassemble on opposite side.
   b. Replace contact module in back.
5. Reassemble cover.

NOTE: For relays with more than one deck; the deck above the contact module to be removed must be removed by loosening the two deck screws.

INSTALLING ADDER DECKS

Additional decks of contact modules may be added to the relay making a relay with up to 12 poles.

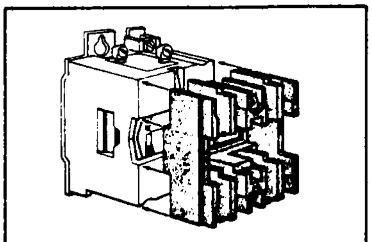

Deck Assembly

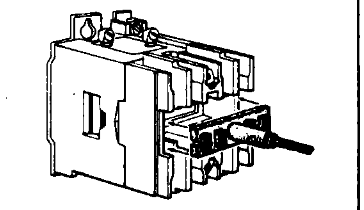

Yoke Assembly and Post

FIGURE 4

To install additional adder decks:

1. Remove power from the device.
2. Loosen cover screws and remove cover.
3. Unscrew steel post and replace with the longer post supplied with the adder deck. If adding two decks only, the extra long post supplied with the second adder deck should be used.
4. Add the deck to the relay using the screws provided.
5. Slip the T-shaped yoke over the steel post.
6. Add the contact modules. For a normally open contact assemble with green tabs up. A normally closed con-

GENERAL ELECTRIC

tact should have the white side up. Make sure the screws are on the top side of each module.

7. If a second adder deck is being used, repeat steps 4, 5, and 6.
8. Reassemble the cover.

INSTALLING THE LATCH ATTACHMENT

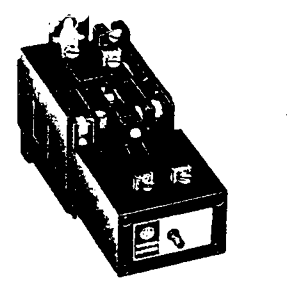

A latch attachment CR120BL000** is available to use with any relay up to 8 poles.

Voltage	Frequency	Suffix No.**
115	60	02
200	60	23
230	60	03
460	60	04
575	60	05
600	60	06
110	50	07
220	50	08
380	50	04
440	50	09
550	50	10

1. Unscrew the steel post and replace with one of the posts supplied with latch. Use the longer post for a 5-8 pole form and the shorter one for a 1-4 pole relay.
2. Remove the two screws holding the cover, but leave the cover in place.
3. Pulling the release lever of the latch attachment toward the latch coil slip the latch attachment over the post.
4. Secure the latch attachment to the relay with the longer screws that are supplied with the latch attachment.
5. If the latch has been assembled correctly the relay should not latch when operated. Check this by either energizing the relay coil or operating by pushing magnet through hole in mounting plate.
6. Adjust the latch by turning post ½ turn CCW and activating the relay. Repeat this operation until relay latches. Release latch and turn post an additional ½ turn CCW. Adjustment is now complete.

   If it is necessary to remove the latch attachment to convert contacts, remove the two screws holding the latch attachment. Pull the release lever of the latch attachment toward the coil and pull the latch attachment off of the post. To reassemble follow steps 3 and 4; readjustment should not be necessary.

INSTALLING THE TIMER ATTACHMENT

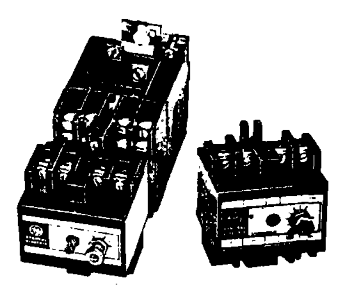

A solid state timer attachment is available in four ranges.

Timing Range	Nomenclature
0.1 - 5 Sec.	CR122BT00002A
.3 - 30 Sec.	CR122BT00002B
.6 - 60 Sec.	CR122BT00002C
1.8 - 180 Sec.	CR122BT00002D

Timers work on 115V 60 Hz.

To install the timer attachment on any relay up to a maximum of 8 poles:

1. Disconnect power from the device.
2. Unscrew the steel post and replace with one of the posts supplied with the timer. Use the longer post for a 5-8 pole form and the shorter one for a 1-4 pole relay.
3. Remove the 2 screws which hold the relay cover; leave the cover in place.
4. Attach the timing head to the relay using the 2 screws supplied with it.
5. Wire the timer as shown on the timer connection diagrams.

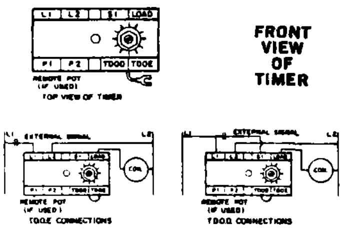

TIMER CONNECTION DIAGRAMS

6. If remote pot. is used,, remove the jumper from P1-P2. Attach the pot. with shielded wire connecting the shield to P1 and the low end of the pot., and connect the other wire to P2 and the pot. wiper. The remote pot. is in series with the internal pot. Therefore the internal pot. should be turned to zero (CCW). For easier setting of time and full timer range a 1 megaohm audio taper pot. should be used.

SIMPLE MAINTENANCE

Preventive maintenance will assure many years of dependable service.

1. Always remove power from device before performing any maintenance.
2. Do not oil or grease the magnet mating surfaces.
3. Contacts are carefully designed for maximum life. The contact module need only be replaced when the silver tip is gone.

ACCESSORY KITS

Contact Modules	CR120BX1
First Adder Deck (can accommodate up to 8 total contact modules)	CR120BX3
Second Adder Deck (use with first adder deck on 8 pole relay to accommodate up to 12 total *contact modules)*	*CR120BX14*
Mounting track	
(40″ long for 16 relays)	CR120BX4
Indicating light	
115V 50/60 Hz	CR120BX5
230V 50/60 Hz	CR120BX6
460V 50/60 Hz	CR120BX7
Noise suppressor, 115V 50/60 Hz	CR120BX2
Wiring trough covers	
1½″ wide x 6 ft.	CR120X15A
2″ wide x 6 ft.	CR120X16A
2½″ wide x 6 ft.	CR120X17A
NEMA 1 enclosure	
(for up to 8 pole relay)	CR120BX15
Retaining shields—6 ft. long for use	
with mounting track	CR120BX9
without mounting track	CR120BX8
Retaining shield brackets (pk of 8)	
for use with mounting track	*CR120BX13*
for use without mounting track	CR120BX12

RENEWAL PARTS

Contact modules CR120BX1

Coils (Order 55-513696G** plus suffix number per table below)

Voltage	Frequency	Suffix No.**
115	60	02
200	60	23
230	60	03
460	60	04
575	60	05
600	60	06
110	50	07
220	50	08
380	50	04
440	50	09
550	50	10

Coil & Magnet Asm

Order CR120B0000A** plus suffix no. per table above.

GENERAL ELECTRIC COMPANY
GENERAL PURPOSE CONTROL PRODUCTS DEPARTMENT
BLOOMINGTON, ILLINOIS 61701

GENERAL ELECTRIC

4/74

PRINTED IN U.S.A.

SELECTION AND INSTALLATION INSTRUCTIONS

APPLYING COMMERCIALLY AVAILABLE CONNECTORS TO GENERAL ELECTRIC TYPE QL OR TYPE QL-C TRANSFORMERS

SECTION 1
SELECTION

GENERAL

There are a number of commercially available connectors which may be applied to General Electric Type QL transformers. Table III provides a listing of several types of UL-listed connectors which may be used. The actual connector should be selected on the basis of the type cable and cable size to be used for the specific job.

SAMPLE SELECTION PROCEDURE UTILIZING GE TABLES

1. Determine if copper or aluminum cable is to be used.

2. Determine high-voltage cable size from either Column 3 or 4 in Table IV.

   The cable size and type shown in Table IV are based upon the following:

   - Nameplate voltage
   - Ampacity at 125% of nameplate kVA
   - 60 C rated cable through 100 amperes
   - 75 C rated cable for greater than 100 amperes
   - National Electrical Code

3. Determine quantity of high-voltage connectors required by multiplying the number of high voltage terminals (Column 2) times the number in parentheses in Column 3 or 4. If no parentheses are shown, the number is one cable per terminal.

4. Determine low-voltage cable size from either Column 6 or 7.

5. Determine quantity of low-voltage connectors required by multiplying Column 5 times the number in parentheses in Column 6 or 7. If no parentheses are shown, the number is one cable per terminal.

6. Select a connector type from Table III and then select specific part numbers which will accept the cable sizes determined in Steps 2 and 4 above.

7. Obtain bolts and washers as required for the various types. The size of bolt holes and the number of holes per terminal pad can be determined by referring to Table IV and Fig. 1.

EXAMPLE

Connectors in Tables I and II were selected by using Table III and IV with Ilsco TA series UL listed for cu/al.

TABLE I
SINGLE-PHASE CONNECTORS

	HV CONNECTORS*			LV CONNECTORS*		
KVA	Qty.	ILSCO No.	Connector Range	Qty.	ILSCO No.	Connector Range
37.5	4	TA250	6-250	4	TA250	6-250
50-75	4	TA250	6-250	8	TA350	6-350
100	4	TA500	4-500	8	TA500	4-500
167	8	TA350	6-350	12	TA500	4-500

TABLE II
THREE-PHASE CONNECTORS

	HV CONNECTORS*			LV CONNECTORS*		
KVA	Qty.	ILSCO No.	Connector Range	Qty.	ILSCO No.	Connector Range
30-50	3	TA250	6-250	4	TA250	6-250
75	3	TA250	6-250	8	TA350	6-350
112.5	3	TA350	6-350	8	TA350	6-350
150	3	TA350	6-350	8	TA500	4-500**
225	6	TA350	6-350	16	TA350	6-350
300	6	TA350	6-350	16	TA350	6-350
400-500	9	TA350	6-350	24	TA500	4-500

* Each connector requires (1) 1-1/2 inch long bolt -
5/16" diameter for TA250
1/2" diameter for TA350 and TA500

**208Y/120 only. 240V LV use TA350.

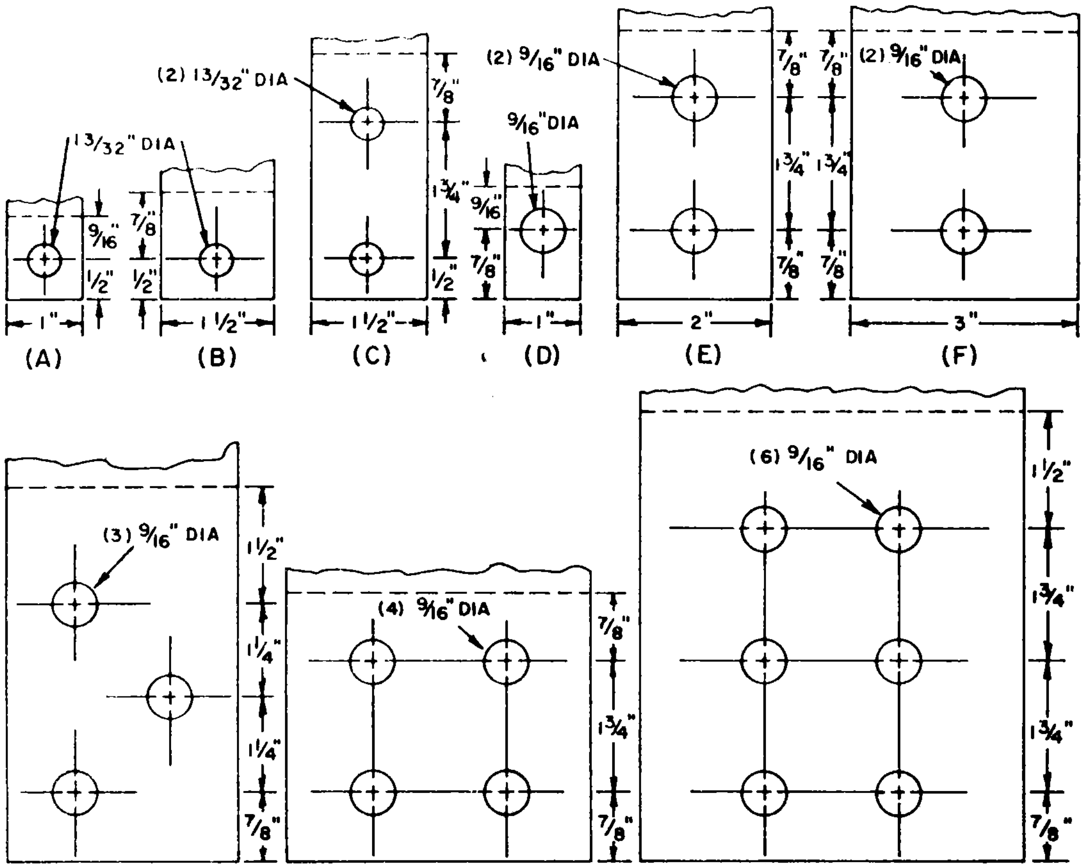

Fig. 1. Terminal pad dimensions

TABLE III
UL LISTED CONNECTORS

	Copper Cable		Aluminum Cable	
Mfg. Name	Screw Type	Crimp Type	Screw Type	Crimp Type
Thomas & Betts	Series 71000 Series 31000	Series 54100	Series 62200	Series 60100
Penn-Union	Type PNL Type SLU Type SAU		Type LA	
Burndy	Type KA	Type YA	Type KA-U	Type YA-A-TN
Anderson	Type LU	Type VCLU	Type DA	Type VCAL
Ilsco	Type LO		Type SLUH Type XTA Type TA Type SG	
Conductor Fittings Corp.			Type A Type A-D	

TABLE IV
GUIDE FOR CABLE TERMINATION SELECTIONS

	COL. 1	COL. 2		COL. 3	COL. 4	COL. 5		COL. 6	COL. 7
		HIGH VOLTAGE				LOW VOLTAGE			
		No. of HV Term.	Term. Pad Dimensions Fig. 1	Cable Size per Terminal		No. of LV Term.	Term. Pad Dimensions Fig. 1	Cable Size per Terminal	
KVA	Model No.			Copper	Alum.			Copper	Alum.
	SINGLE-PHASE*								
37.5	9T23B2662	4	(A)	#1	1/0	4	(B)	3/0	250 MCM
	9T23B2672	4		#1	1/0	4		3/0	250 MCM
	9T23A2672G62	4		#1	1/0	4		3/0	250 MCM
	9T23B2682	2		#3	#2	4		3/0	250 MCM
50	9T23B2663	4		2/0	2/0	4		300 MCM	(2)3/0
	9T23B2673	4		2/0	2/0	4		300 MCM	(2)3/0
	9T23A2673G62	4	↓	2/0	2/0	4	↓	300 MCM	(2)3/0
	9T23B2683	2	(A)	#1	2/0	4	(B)	300 MCM	(2)3/0
75	9T23B2674	4	(B)	3/0	250 MCM	4	(C)	(2) 3/0	(2)250 MCM
	9T23A2674G62	4	(B)	3/0	250 MCM	4	↓	(2) 3/0	(2)250 MCM
	9T23B2684	2	(B)	2/0	3/0	4	(C)	(2) 3/0	(2)250 MCM
100	9T23B2675	4	(D)	300 MCM	400 MCM	4	(E)	(2)300 MCM	(2)400 MCM
	9T23A2675G62	4	(D)	300 MCM	400 MCM	4	↓	(2)300 MCM	(2)400 MCM
	9T23B2685	2	(D)	4/0	300 MCM	4	(E)	(2)300 MCM	(2)400 MCM
167	9T23B2676	4	(F)	(2) 4/0	(2)300 MCM	4	(H)	(3)350 MCM	(3)500 MCM
	9T23B2686	2	(F)	(2) 3/0	(2) 4/0	4	(H)	(3)350 MCM	(3)500 MCM
	THREE-PHASE								
30	9T23B3872	3	(A)	#6	#4	4	(A)	#1	2/0
	9T23A3872G2	3		#6	#4	4		#1	2/0
	9T23B3882	3		#6	#4	3		#2	0
	9T23A3882G62	3		#6	#4	3		#2	0
	9T23B3892	3		#8	#6	4		#1	2/0
45	9T23B3873	3		#4	#2	4		2/0	4/0
	9T23A3873G62	3		#4	#2	4		2/0	4/0
	9T23B3883	3		#4	#2	3		2/0	3/0
	9T23A3883G62	3		#4	#2	3		2/0	3/0
	9T23B3893	3		#6	#4	4		2/0	4/0
50	9T23B3864	3		#3	#1	4		2/0	4/0
75	9T23B3874	3		0	2/0	4		300 MCM	(2)3/0
	9T23A3874G62	3		0	2/0	4		300 MCM	(2)3/0
	9T23B3884	3		0	2/0	3		4/0	300 MCM
	9T23A3884G62	3	↓	0	2/0	3	↓	4/0	300 MCM
	9T23B3894	3	(A)	2	0	4	(A)	300 MCM	(2)3/0
112.5	9T23B3875	3	(D)	2/0	4/0	4	(E)	(2)3/0	(2)250 MCM
	9T23A3875G62	3		2/0	4/0	4		(2)3/0	(2)250 MCM
	9T23B3885	3		2/0	4/0	3		(2)3/0	(2)4/0
	9T23A3885G62	3		2/0	4/0	3		(2)3/0	(2)4/0
	9T23B3895	3		2/0	3/0	4		(2)3/0	(2)250 MCM
150	9T23B3876	3		4/0	300 MCM	4		(2)300 MCM	(2)400 MCM
	9T23A3876G62	3		4/0	300 MCM	4		(2)300 MCM	(2)400 MCM
	9T23B3886	3		4/0	300 MCM	3		(2)4/0	(2)300 MCM
	9T23A3886G62	3	↓	4/0	300 MCM	3	↓	(2)4/0	(2)300 MCM
	9T23B3896	3	(D)	3/0	4/0	4	(E)	(2)300 MCM	(2)400 MCM
225	9T23B3877	3	(E)	(2)3/0	(2)4/0	4	(H)	(3)300 MCM	(4)250 MCM
	9T23A3877G62	3		(2)3/0	(2)4/0	4		(3)300 MCM	(4)250 MCM
	9T23B3887	3		(2)3/0	(2)4/0	3		(3)4/0	(3)300 MCM
	9T23A3887G62	3		(2)3/0	(2)4/0	3		(3)4/0	(3)300 MCM
300	9T23B3878	3		(2)4/0	(2)300 MCM	4		(4)300 MCM	(4)400 MCM
	9T23A3878G62	3		(2)4/0	(2)300 MCM	4		(4)300 MCM	(4)400 MCM
	9T23B3888	3	↓	(2)4/0	(2)300 MCM	3	↓	(4)250 MCM	(4)300 MCM
	9T23A3888G62	3	(E)	(2)4/0	(2)300 MCM	3	(H)	(4)250 MCM	(4)300 MCM
400	9T23B3866	3	(G)	(2)350 MCM	(2)350 MCM	4	(J)	(4)500 MCM	(5)500 MCM
500	9T23B3879	3		(3)250 MCM	(3)350 MCM	4		(5)500 MCM	(6)500 MCM
	9T23A3879G62	3		(3)250 MCM	(3)350 MCM	4		(5)500 MCM	(6)500 MCM
	9T23B3889	3	↓	(3)250 MCM	(3)350 MCM	3	↓	(5)400 MCM	(6)500 MCM
	9T23A3889G62	3	(G)	(3)250 MCM	(3)350 MCM	3	(J)	(5)400 MCM	(6)500 MCM

* Series and multiple single-phase transformers, connected for 480-V high voltage and 240/120-V three-wire voltage.

NOTE: Connectors for 9T23 models may be used for any Group Number variation of the basic model number. For example, the proper connectors for Model 9T23B2672 are also proper for 9T23B2672G14.

NOTE: Max. thickness of terminal pad is 3/8 inches.

SECTION 2
INSTALLATION

ALUMINUM CABLE TERMINATION PROCEDURES

CAUTION: *TO HELP GUARD AGAINST OVERHEATING, THE PROCEDURES LISTED IN STEPS 1 THROUGH 6 ARE RECOMMENDED WHEN CONNECTING ALUMINUM WIRE.*

Step 1. Strip the wire of its insulation to the desired length, without ringing or nicking the wire.

Step 2. Apply a suitable joint compound, such as Penetrox A, Alnox-UG, or T&B21059, to the exposed conductor and wirebrush through it to remove the oxide film from the outer strands.

Step 3. Thoroughly coat the exposed conductor with joint compound.

Step 4. Insert the wire into the connector, making certain all strands are contained, and tighten the wire retaining screw securely per Table V. This operation should result in compound oozing out from between the individual strands of the wire. If this does not happen, it is an indication that an insufficient quantity of compound was used.

Step 5. Wipe the excess compound from the area adjacent to the wire connection because some compounds contain metallic particles which could reduce the dielectric strength of the insulating material employed.

Step 6. After a few seconds, retighten the wire retaining screw per Table V.

COPPER CABLE TERMINATION PROCEDURES

The procedures used for aluminum cable are applicable except the use of the joint compound may be omitted.

TABLE V

Wire Size	Torque (In. -Lbs)	Wire Size	Torque (In. -Lbs)
14-8	75	3/0-200	200
6-4	100	250-400	250
3-1	125	500-750	300
1/0-2/0	150		

CABLE RETAINING SCREW TORQUE

The wire retaining screw should be tightened in accordance with Table V for both copper and aluminum wire:

A few seconds after the initial tightening, the retaining screw should be retightened to ensure a good connection. This retightening procedure is of particular importance when aluminum wire is used.

CONNECTION TO TRANSFORMER TERMINAL

NOTE: *Do not remove the protective compound from the line terminal of the transformer. If the compound is accidentally removed, make certain that the terminal contact area is clean and then coat both surfaces with a copper-aluminum joint compound.*

Bend the cable so that the hole in the connector mates with the hole in the terminal and the contact surfaces are in good contact alignment.

With a flat washer under the head, insert the bolt through the hole in the terminal and the connector and add a flat washer, lockwasher, and nut.

CAUTION: *TO GUARD AGAINST OVERHEATING THERE MUST NOT BE ANY WASHERS BETWEEN THE TERMINALS AND THE CONNECTORS.*

Align the cables so that adequate electrical clearances per NEÇ-373-11 are maintained and tighten per Table VI.

If electrical clearances are questionable, the exposed electrical connection should be insulated with electrical tape.

TABLE VI

Bolt Size	Torque (In. -Lbs)
5/16"	120
3/8"	220
1/2"	480

INSTALLATION AND OPERATING INSTRUCTIONS

GEK-33276-B

DRY-TYPE GENERAL PURPOSE TRANSFORMERS

TYPE QL *

HANDLING

Provisions for lifting are provided. Because transformers are surprisingly heavy, care should be exercised to check the weight shown on the shipping label to assure adequate capacity of lifting equipment. For safety, spreaders should be used with lifting chains or slings to assure near vertical lift, thereby minimizing stress in the lifting equipment. Lifting means are provided on the top core clamps inside the unit. The unit may be lifted by forks or skidded at the base.

INSTALLATION

PREPARATION

Any accumulations of dirt or dust may be removed by brushing or by blowing dry air on the unit. If moisture is evident by the appearance of rust or mildew, the unit should be dried out by placing it in an oven or by blowing heated air over it. In either case the temperature should not exceed 110 C (230F).

MOUNTING

The only foundation necessary is a flat surface strong enough to support the weight of the unit. Regardless of the type of mounting surface, permanent and effective grounding of the metal case in accordance with the National Electrical Code is recommended as a safety precaution for personnel. Free circulation of air is essential for the proper operation of all dry-type transformers. Therefore, a minimum distance of six inches to adjacent structures, except the mounting surface, should be maintained.

CONNECTIONS

Reference should be made to the wiring diagram and/or nameplate when making electrical connections to the transformer.

WARNING: *BECAUSE OF DANGER OF ELECTRICAL SHOCK, DO NOT CHANGE CONNECTIONS WHILE THE UNIT IS ENERGIZED.*

Care must be taken to place all leads to the same load, or from the supply source, through one knockout so that no part of the transformer case is positioned between such leads.

All General Electric Type QL general purpose transformers are designed for easy accommodation of cables sizes in accordance with NEC. Cables which will carry less than 100 amperes may have a 60 C temperature rating or higher, and cables which will carry 100 amperes or more must have a 75 C temperature rating or higher. All cable entrances should be in the lower part of the transformer enclosure in accordance with markings on the enclosure and outline drawings.

This unit has been designed and assembled to provide excellent electrical connections to this transformer with either copper or aluminum connecting cable.

Do not remove the protective compound from tap or line terminals. This protective material has been put on at the factory to help assure proper electrical contact. If the compound is accidentally removed, make certain that the terminal contact area is clean and coat this surface with a commercially available protective compound recommended for copper-aluminum electrical joints.

This assembly of a connector to the line terminal is also important. The connector must be of the proper size for the cable and of the proper type for the cable connector metal. Follow established installation procedures recommended by the connector manufacturer. Space and insulate connectors per NEC Section 374-7. Type QL transformers are designed to accommodate a variety of UL-listed copper or copper-aluminum cable connectors. Transformers 15 through 100 kva have terminals with holes for 3/8" bolts, while larger transformers have holes for 1/2" bolts. GEK-33278 is a typical guide for connector selection.

GENERAL INFORMATION

After the encased transformer is installed, but before it is energized, the bolt and nut connections which extend through the rubber mounting pads and secure the core and coil to the frame should be loosened (with no visible compression of the pads under the bolt head and nut) to assure quiet operation. These connections should be retightened before transporting the transformer to another location.

*AND OTHER GENERAL PURPOSE DRY TYPE CONSTRUCTIONS.

Dry-type transformers inherently have lower capability for withstanding voltage surges imposed upon the lines by lightning, switching, or other sources than liquid-filled units. Particular care should be taken to provide adequate surge protection to the transformer by means of lightning arresters in any installation where transformer or connecting lines are exposed to such voltages.

All General Electric Type QL transformers have built-in capability for overloading in accordance with the table below.

PERMISSIBLE ONCE-DAILY OVERLOADS
WITH NORMAL LIFE MAINTAINED

Peak Load Time (Hours)	Peak Load Following and Followed by A Constant Load of		
	90% NPR	70% NPR	50% NPR
1/2	162% NPR	185% NPR	200% NPR
1	138% NPR	148% NPR	152% NPR
2	123% NPR	128% NPR	133% NPR
4	113% NPR	115% NPR	118% NPR
8	106% NPR	107% NPR	108% NPR

NPR — Nameplate Rating

RECEIVING

Upon receipt of shipment, examine the package for damage that may have been sustained in transit. If the shipping container must be opened outdoors, take proper precautions to prevent the entrance of moisture. While unpacking, examine the product for broken, bent, or loose parts or other damage. If injury from outside sources is evident, file a damage claim with the transportation company and notify the nearest General Electric Sales Office.

DESCRIPTION

Type QL transformers have a ventilated, encased construction suitable for indoor service only, unless ordered and supplied for protected-outdoor service. All encased models are designed for floor or platform mounting. The core-and-coil structure is mounted on rubber pads at the base to minimize transmission of vibration.

Transformers having outdoor protection, are provided with a tamper-resistant hardware kit. The kit consists of 8 Holt-head screws (which replace factory installed screws) and a tool for their installation. The recommended location of the tamper-resistant screws is as follows: one in each corner of the top cover and one in each lower corner of the front and rear cover plates.

In addition to the tamper resistance provided by the Holt-head screws, the front and back coverplates may be padlocked (one required for each plate). This is accomplished by removing the knockouts located in the bottom center of the front and back cover plates. Then insert the padlock through the corresponding holes in the coverplate and the transformer base.

Dry-type general purpose transformers are cooled by free circulation of surrounding air. Type QL transformers depend upon air to enter the case at the bottom, flow upward over the core-and-coil surfaces, and exit through openings near the top. These transformers will carry full-rated loads continuously when the surrounding air does not exceed 40 C (104 F) and adjacent structures permit free movement of cooling air.

General purpose transformers are designed to reach rated temperature rise above ambient air temperature when operating continuously at rated voltage, frequency, and load. Serious overheating with resultant fire damage may result if the unit is operated for sustained periods above rated voltage, above rated current*, or lower than rated frequency. However, general purpose transformers having frequency ratings within the range of 25 to 100 hertz may be operated safely at *higher* than nameplate-rated hertz.

General purpose transformers of identical model numbers will operate satisfactorily when connected in parallel or in three-phase banks. (Tapped units must be connected on the same voltage tap.) Single-phase units may also be connected as autotransformers for boosting or bucking voltage. However, the use of autotransformers is subject to precautions: secondary circuits supplied by autotransformers may be subjected to exceptionally severe short circuits unless protected by current-limiting means. It is recommended that suitable current-limiting devices be installed, where necessary, to limit the short-circuit current to 25 times the rated current. In all cases, the National Electrical Code regulations should be followed.

MAINTENANCE

In general, dry-type transformer products have no moving parts. The only maintenance required is periodic inspection of connections and removal of accumulated dust, dirt, and lint.

Additional information relating to the installation and maintenance of general purpose transformers can be found in American National Standards Institute publication C57-94, "Guide for Installation and Maintenance of Dry-type Transformers."

RENEWAL PARTS

Because of the unit structure of these transformers, field repairs are usually uneconomical, and no spare parts and renewal parts are recommended. If conditions of operation dictate the need for standby equipment, a complete spare unit is recommended.

STORAGE

The storage room should be clean and dry and, when possible, without extreme temperature variations. Before placing a dry-type transformer in service after a period of storage, be sure that it is clean and dry by observing the instructions under "Installation."

---

* Rated current equals rated volt-amperes divided by rated voltage for single-phase units; or for three-phase units, rated volt-amperes divided by rated line-to-line volts, the quotient of which is divided by the square root of three – (1.732).

PRINTS

BN 8(1-14) 8-80

SH NO A

36B598459 CONT'D ON SH

REV NO 0

©

ADJUSTABLE FREQUENCY DRIVE

FOR

P. L. ARMSTRONG CO., INC

REQN NO 480-02818-2

SYMBOLS

Ⓡ - RED INDICATING LIGHT

$\boxed{\text{D}}$ - MOUNTED ON DOOR

 - THERMAL SWITCH

▲ - RELAY COIL SUPPRESION

○─○ - JUMPER

 - TWISTED WIRE

$\boxed{\text{O}}$ - SUPPLIED BY OTHERS REMOTELY MOUNTED

$\boxed{\text{R}}$ - REMOTELY MOUNTED

$\boxed{\text{BA}}$ - MOUNTED IN BUBBLER ASSEMBLY

$\boxed{\text{M2}}$ - REMOTELY MOUNTED AT MOTOR NUMBER 2

NOMENCLATURE

DR - DRIVER

IL - INDICATING LIGHT

INV - INVERTER

IPSR-PA, PS-1B - ± 20V POWER SUPPLY ASSEMBLY

IS - SIGNAL ISOLATOR

LLR - LOW LEVEL RELAY

LOR - LOGIC RELAY

OA1 - OPERATIONAL AMPLIFIER

OPTB - OUTPUT POWER TERMINAL BOARD

PL - PLUG CONNECTION

CB - CIRCUIT BREAKER

CT - CURRENT TRANSFORMER

SLD - SIGNAL LEVEL DETECTOR

THSW - THERMAL SWITCH

TVR - 20 VOLT RELAY

SI - SPEED INDICATOR

TDAD - TIME DELAY AFTER DE-ENERGIZATION

TDAE - TIME DELAY AFTER ENERGIZATION

FU - FUSE

3.24-177

REV 3	REV 2	REV 1	APPROVED	GENERAL ELECTRIC	ELEMENTARY DIAGRAM TITLE
REV 4	ISSUED T. FREEBORN 9/15/80	PRINTS TO 5(S)	FIRST MADE FOR REQ 480-02818-2	SPEED VARIATOR PROD DIV OR DEPT	36B598459 SH NO A
REV 5	MADE BY T. EASTER AUGUST 27, 1980			ERIE, PA LOCATION	CONT ON SH

DRAWING NOTES

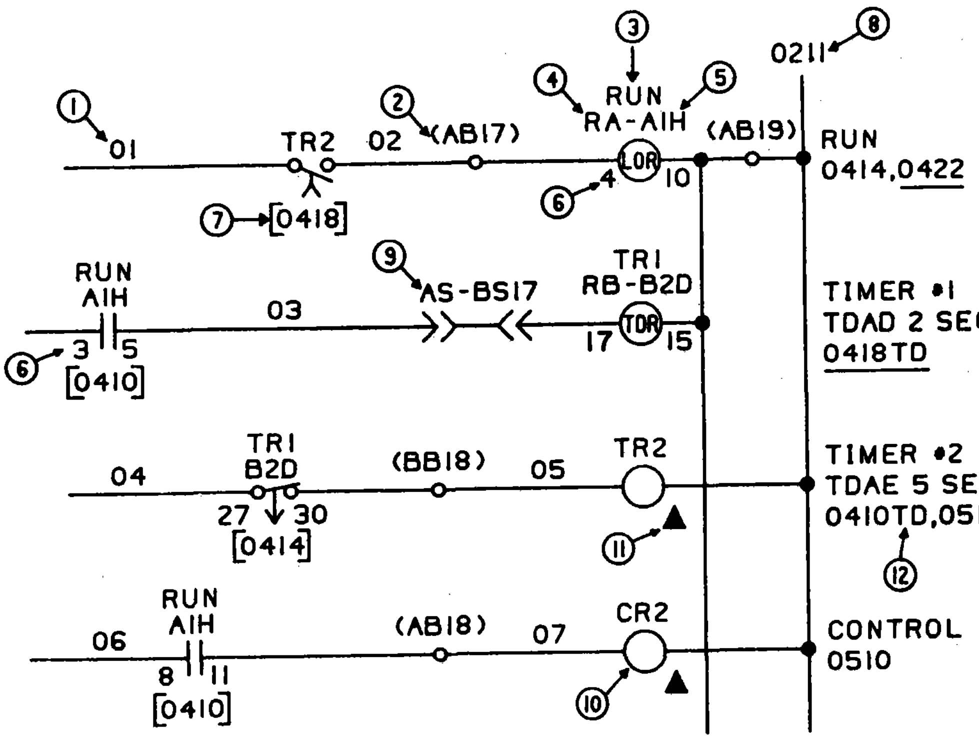

① WIRE NUMBERS ARE SHOWN ON EACH SHEET AS TWO-DIGIT NUMBERS (E.G. 01, 02, 10, 42, ETC.) EXCEPT FOR WIRES ORIGINATING ON ANOTHER SHEET, WHICH ARE SHOWN AS 4-DIGIT OR 5-DIGIT NUMBERS. IN ALL CASES, THE COMPLETE WIRE NUMBER (WHICH APPEARS ON THE ACTUAL WIRES IN THE EQUIPMENT AND ON THE TERMINAL BOARDS) IS A 4-DIGIT OR 5-DIGIT NUMBER. THE FIRST TWO OR THREE DIGITS INDICATE THE NUMBER OF THE ELEMENTARY DIAGRAM SHEET ON WHICH THE WIRE ORIGINATES AND THE LAST TWO DIGITS INDICATE THE WIRE ON THAT SHEET. THUS 2A04 INDICATES WIRE NUMBER 04 ORIGINATING ON SHEET 2A OF THE DIAGRAM; ANC 15C34 INDICATES WIRE NUMBER 34 ORIGINATING ON SHEET 15C. I.E. IF THIS SKETCH WERE ON ELEMENTARY PAGE 4 THE COMPLETE WIRE NUMBER WOULD BE 0401.

② THIS NUMBER SPECIFIES THE LOGIC RELAY ASSEMBLY INPUT-OUTPUT TERMINAL POINT. THE NUMBER AB17 SPECIFIES "A" FOR THE "A" RACK ASSEMBLY AND "B" FOR THE "B" TERMINAL BOARD, TERMINAL NUMBER 17. IF A SINGLE RACK IS USED THE "A" MAY BE ELIMINATED THEN THE NUMBER BECOMES B17.

③ THESE LETTERS SHOW THE FUNCTIONAL NOMENCLATURE OF THE ASSOCIATED RELAY.

④ THE LETTERS "RA" INDICATE THE "A" COIL IS USED FOR THE "RUN" RELAY.

⑤ THIS NUMBER SPECIFIES THE PHYSICAL LOCATION OF THE RELAY.

- A) THE FIRST CHARACTER A__ REPRESENTS LOGIC RELAY ASSEMBLY A. IF A SECOND RELAY ASSEMBLY IS PROVIDED ITS NOMENCLATURE WOULD BE "B" ETC. FOR A SINGLE ASSEMBLY THE A MAY BE OMITTED, THEN THE NOMENCLATURE BECOMES RA-1H.
- B) THE SECOND CHARACTER _1_ REPRESENTS THE LOWER MOST ROW OF RELAY CARDS WHEN THE ASSEMBLY CONTAINS TWO ROWS OR IN THE CASE OF A SINGLE ROW OF RELAY CARDS, THIS NUMBER SIMPLY REFERS TO THAT SINGLE ROW, IF THE ASSEMBLY CONTAINS TWO ROWS THE UPPER ROW WOULD BE SHOWN _2_.
- C) THE THIRD CHARACTER SHOWS THE LOGIC ASSEMBLY RELAY CARD SOCKET LOCATION WITHIN THE LOGIC ASSEMBLY. THE LETTER B DESIGNATES THE RELAY CARD TO THE EXTREME LEFT, D REPRESENTS THE CARD TO THE IMMEDIATE RIGHT OF B, F REPRESENTS THE CARD TO THE IMMEDIATE RIGHT OF D ETC., ETC.

⑥ THIS NUMBER SPECIFIES THE TERMINATION POINT ON THE LOGIC RELAY ASSEMBLY CARD SOCKET.

⑦ THIS NUMBER SPECIFIES THE LOCATION OF THE RELAY COIL CONTROLLING THE CONTACTS SHOWN IMMEDIATELY ABOVE. THIS EXAMPLE SHOWS THE TR2 COIL IS ON ELEMENTARY PAGE 4 LINE 18.

⑧ THIS NUMBER SPECIFIES THE WIRE ORIGINATING ON ELEMENTARY PAGE 2 WIRE NUMBER 11.

⑨ PLUG CONNECTION (IF USED) FROM RACK "A" PLUG "S" TO RACK "B" PLUG "S" AT PIN 17.

⑩ PANEL MOUNTED RELAY
TDAE - TIME DELAY AFTER ENERGIZATION
TDAD - TIME DELAY AFTER ENERGIZATION

⑪ INDICATES A RELAY COIL SUPPRESSOR

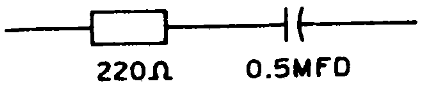

ALL RELAYS OR CONTACTORS ADDED IN THE PROXIMITY OF THE SCR EQUIPMENT ENCLOSURE, OR USED WITH CONTROL INTERFACE LOGIC MUST HAVE SUPPRESSED COILS. INCLUDES: SOLENOIDS, BRAKES, ETC.

⑫ THIS NUMBER SPECIFIES THE LOCATION OF THE RELAY CONTACT CONTROLLED BY THE COIL. THIS EXAMPLE SHOWS A TIME DELAY CONTACT FROM THE TR2 COIL BEING USED ON LINE 10 OF SHEET 04. UNDERLINED CONTACT LOCATION INDICATE N.C. CONTACTS.

3.24-178

ORIGINAL TRACING

REV. 3	REV. 2	REV. 1	APPROVALS	GENERAL ELECTRIC SPEED VARIATOR DEPT. ERIE, PA. U.S.A.	ELEMENTARY DIAGRAM DRAWING NOTES
REV. 4	ISSUED 9/15/		FIRST MADE FOR 480-02818-2		36B598459 CONT. ON SH.
REV. 5	ADDED BY August 26, 1990				SH. NO. B

WP0425B

SH. NO. C
36B598459
CONT. ON SH.

INVERTER
OPERATING NOTES

CAPACITOR FORMING

ELECTROLYTIC CAPACITORS HAVE A LIMITED SHELFLIFE WHEN NOT ENERGIZED. IT IS THEREFORE, NECESSARY TO FORM THE CAPACITORS BEFORE NORMAL CHARGING CAN TAKE PLACE.

A. LESS THAN 6 MONTHS: NO FORMING REQUIRED.

B. 6 MONTHS OR MORE: SEE INSTRUCTION BOOK GEK 24982 (START UP AND CHECKOUT SECTION) FOR DETAILS.

THE UNIT WAS LAST ENERGIZED IN OUR FACTORY ON 12 JANUARY 1981.

THE AF400 INVERTER IS AN ADJUSTABLE FREQUENCY MOTOR DRIVE DESIGNED FOR INDUSTRIAL APPLICATIONS. EITHER SINGLE MOTOR OR MULTI-MOTOR OPERATION FROM A SINGLE POWER UNIT CAN BE ACCOMPLISHED. ADJUSTMENT OF MOTOR SPEED IS ACHIEVED BY CHANGING BOTH INVERTER OUTPUT FREQUENCY AND VOLTAGE. THIS CREATES THE CONSTANT VOLTAGE PER CYCLE (V/HZ) NECESSARY TO PROPERLY EXCITE THE AC MOTOR OVER ITS BASE OPERATING RANGE.

THE INVERTER OUTPUT IS CREATED IN THREE BASIC STEPS: 1) THE CONVERTER MODULE CHANGES THE INCOMING 3 PHASE AC LINE TO A VARIABLE DC VOLTAGE NECESSARY TO OBTAIN THE ADJUSTABLE INVERTER OUTPUT VOLTAGE. THE CONVERTER MODULE IS A 3 PHASE SIX SCR FULL WAVE RECTIFIER BRIDGE. 2) THE DC LINK FILTER PROVIDES THE NECESSARY CONVERTER FILTERING AND OPTIMUM MOTOR OPERATION. THE DC LINK FILTER CONSISTS OF AN IRON CORE REACTOR (L1) AND A BANK OF ELECTROLYTIC CAPACITORS (C1). 3) THREE INVERTER PHASE MODULES ALTERNATELY CONNECTS THE POSITIVE AND NEGATIVE SIDE OF THE DC BUS THE MOTOR LEADS. THIS ACTION CREATES THE ADJUSTABLE VOLTAGE AND FREQUENCY FOR CONTROLLING THE MOTOR SPEED. EACH INVERTER PHASE MODULE CONSISTS OF TWO MAIN SCRS, TWO COMMUTATION SCRS, TWO COMMUTATION DIODES, A COMMUTATION CAPACITOR AND COMMUTATION REACTOR.

THE PHASE TO PHASE OUTPUT VOLTAGE IS A SQUARE WAVE. THE VOLTAGE DURING THE FIRST 30° OF THE OUTPUT WAVE FORM IS ZERO. DURING THE NEXT 120° OF THE WAVE THERE IS A POSITIVE SQ. WAVE VOLTAGE. FOR THE FOLLOWING 60° THE WAVE IS ONCE AGAIN ZERO. THE NEXT 120° HAS A NEGATIVE SQ. WAVE VOLTAGE. THE FINAL 30° OF THE WAVE IS ZERO. A DETAILED THEORY OF OPERATION AS WELL AS PICTURES OF THE OUTPUT VOLTAGE CAN BE FOUND IN THE INSTRUCTION BOOK SUPPLIED WITH THIS EQUIPMENT.

REFER TO GEK 29482 FOR A DETAILED DESCRIPTION.

STOPPING AND STARTING OF INVERTERS

THE INVERTER IN THIS DRIVE SYSTEM HAS TIMED ACCELERATION AND TIMED DECELERATION. STARTING AND STOPPING IS NORMALLY ACCOMPLISHED BY MEANS OF THE CONTROL LOGIC. THE INVERTER WILL GO THROUGH A TIMED STOP FOR AN OPENING OF THE THERMAL SWITCH IN THE INVERTER MODULE.

DURING A TIMED STOP THE INVERTER WILL TIME DOWN FROM THE FREQUENCY AT WHICH IT IS RUNNING TO A MINIMUM FREQUENCY AND THEN STOP. IF THE MOTOR REMAINS CONNECTED TO THE INVERTER WHEN THE STOP LOGIC IS ACTIVATED, THE MOTOR WILL DECELERATE TO THE SPEED CORRESPONDING TO THE MINIMUM FREQUENCY AND THEN COAST TO A STOP. THE INVERTER WILL ALSO STOP FOR CONDITIONS SUCH AS UNDER OR OVER VOLTAGE INPUT, OVER FREQUENCY OR INSTANTANEOUS OVER CURRENT. FOR THESE CONDITIONS THE INVERTER STOPS IMMEDIATELY AND THE MOTOR WILL COAST TO A STOP, OR BE OPERATED FROM ANOTHER SOURCE AS DETERMINED BY THE PARTICULAR SYSTEM MODE OF OPERATION.

PROTECTIVE DEVICES

THE INVERTER HAS THE FOLLOWING PROTECTIVE FEATURES:

A) INCOMING AC LINE FUSES, B) THERMAL SWITCH OVERTEMPERATURE PROTECTION, C) DRIVER CONTROLLED CURRENT LIMIT (CL), D) TIME OVERCURRENT ITOC, INSTANTANEOUS OVERCURRENT - IFT, E) COMMUTATION OVERCURRENT - COC, F) SINGLE PHASE AND PHASE SEQUENCE PROTECTION - PSLP, G) CONTROL UNDER VOLTAGE - CUV, AND H) OVERFREQUENCY PROTECTION.

THE CURRENT LIMIT CIRCUITRY REDUCES THE REFERENCE IN THE DRIVER AND THUS REDUCES BOTH THE OUTPUT VOLTAGE AND FREQUENCY OF THE INVERTER TO LIMIT THE CURRENT. TIMED OVERCURRENT WILL SHUT DOWN THE INVERTER AFTER A CERTAIN PERIOD OF OVERCURRENT. THE DRIVER ALSO PROVIDES AN IFT TRIP CIRCUIT. THIS CIRCUIT SENSES A FAULT CONDITION, SHUTS OFF ALL THE SCR'S AND PREVENTS THEM FROM FIRING AGAIN. THE DRIVE IS RESET BY OPERATING THE STOP LOGIC, WAITING UNTIL THE REFERENCE TIMES DOWN TO ZERO, AND THEN RESTARTING THE INVERTER. IF THE FAULT CONDITION HAS BEEN REMOVED, THE INVERTER WILL FUNCTION NORMALLY.

REFER TO GEK 24982 FOR DETAILS.

STARTUP AND CHECKOUT PROCEDURE

SEE GEK 24982.

324-179

ORIGINAL TRACING

REV. 3	REV. 2	REV. 1	APPROVALS	GENERAL ELECTRIC SPEED VARIATOR DEPT. ERIE, PA. U.S.A.	ELEMENTARY DIAGRAM OPERATING NOTES
REV. 4	ISSUED V.FREEBURN 9/15/80		FIRST MADE FOR M.O. 480-02818-2		36B598459 CONT. ON SH.
REV. 5	MADE BY R.Bolln August 26, 1980				SH. NO. C

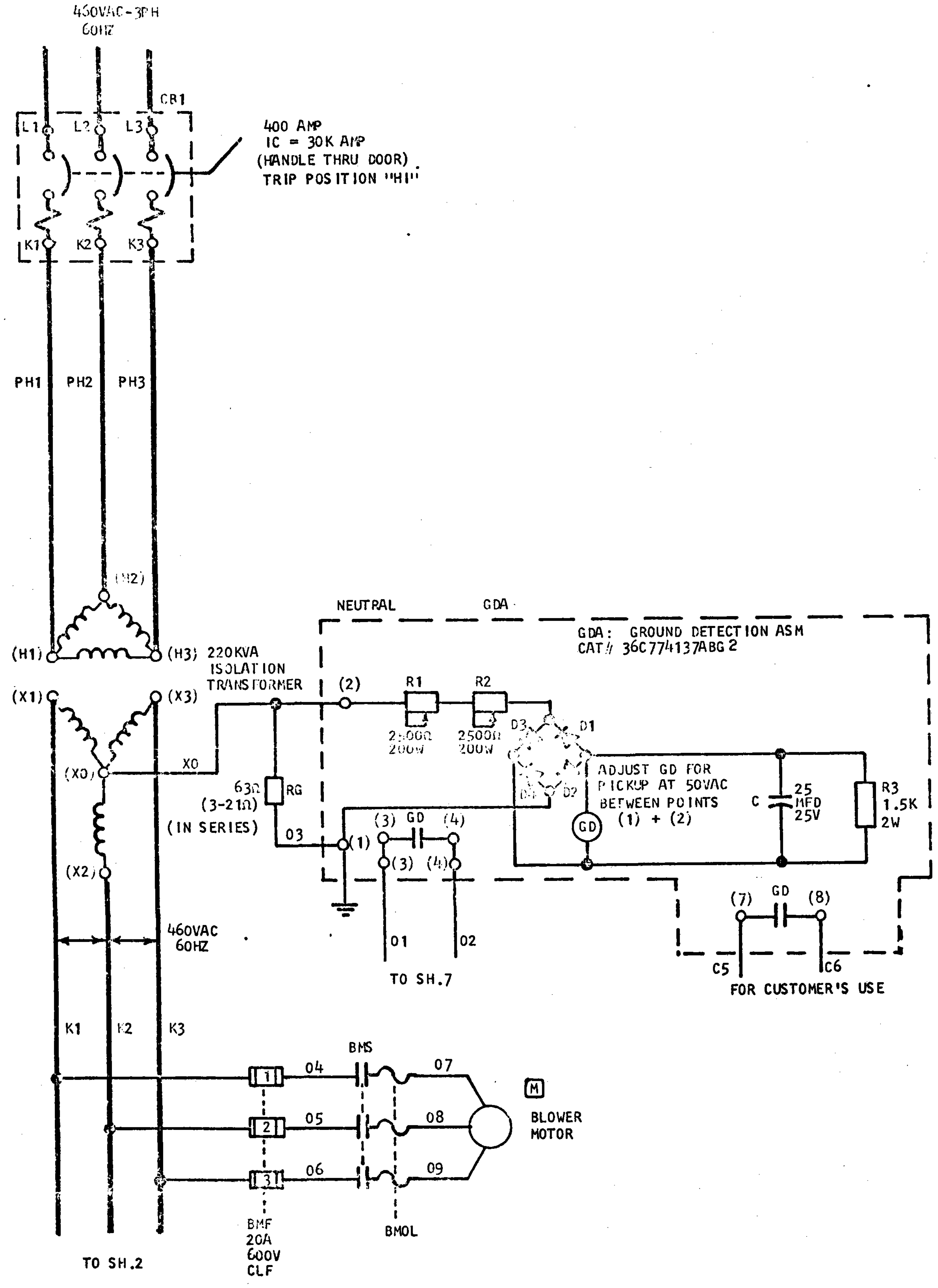

REV. 3	REV. 2	REV. 1	APPROVALS	**GENERAL ELECTRIC** SPEED VARIATOR DEPT. ERIE, PA. U.S.A.	ELEMENTARY DIAGRAM
REV. 4	DRAWN	CHECKED	FIRST MADE FOR 480-02818-2		36B598459 / SH. NO. 1
REV. 5	D. Orrington, Aug. 26, 1980		6V200B5079		CONT. ON SH.

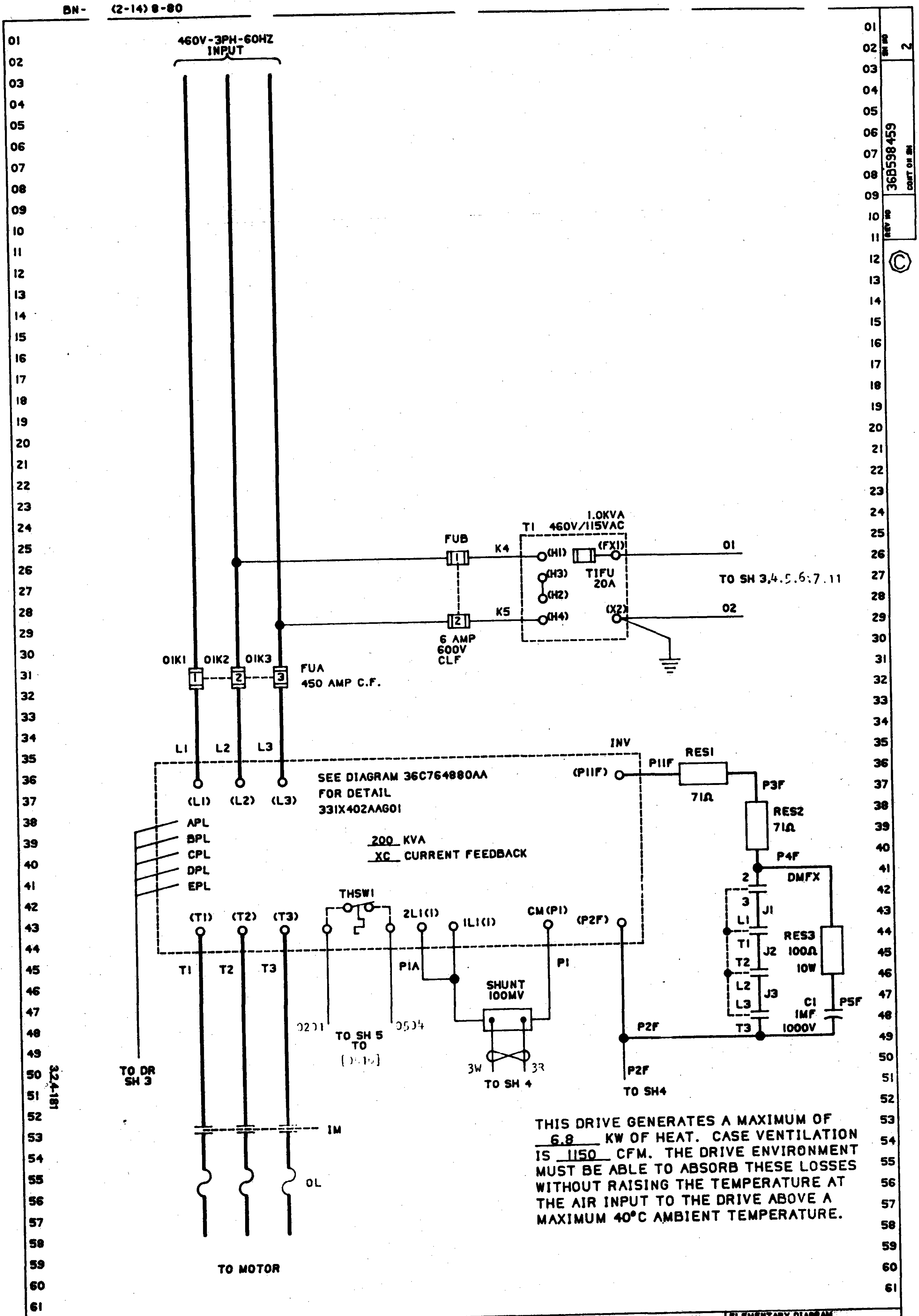

THIS DRIVE GENERATES A MAXIMUM OF 6.8 KW OF HEAT. CASE VENTILATION IS 1150 CFM. THE DRIVE ENVIRONMENT MUST BE ABLE TO ABSORB THESE LOSSES WITHOUT RAISING THE TEMPERATURE AT THE AIR INPUT TO THE DRIVE ABOVE A MAXIMUM 40°C AMBIENT TEMPERATURE.

REV 3	REV 2	REV 1	APPROVED	GENERAL ELECTRIC	ELEMENTARY DIAGRAM INVERTER
REV 4	ISSUED	PRINTS TO 5(S)	FIRST MADE FOR REQ 480-02818-2	SPEED VARIATOR PROD DIV OR DEPT	36B598459 | SH NO 2
REV 5	MADE BY T. EASTER AUGUST 27, 1980		6V200B5079	ERIE, PA LOCATION	CONT ON SH

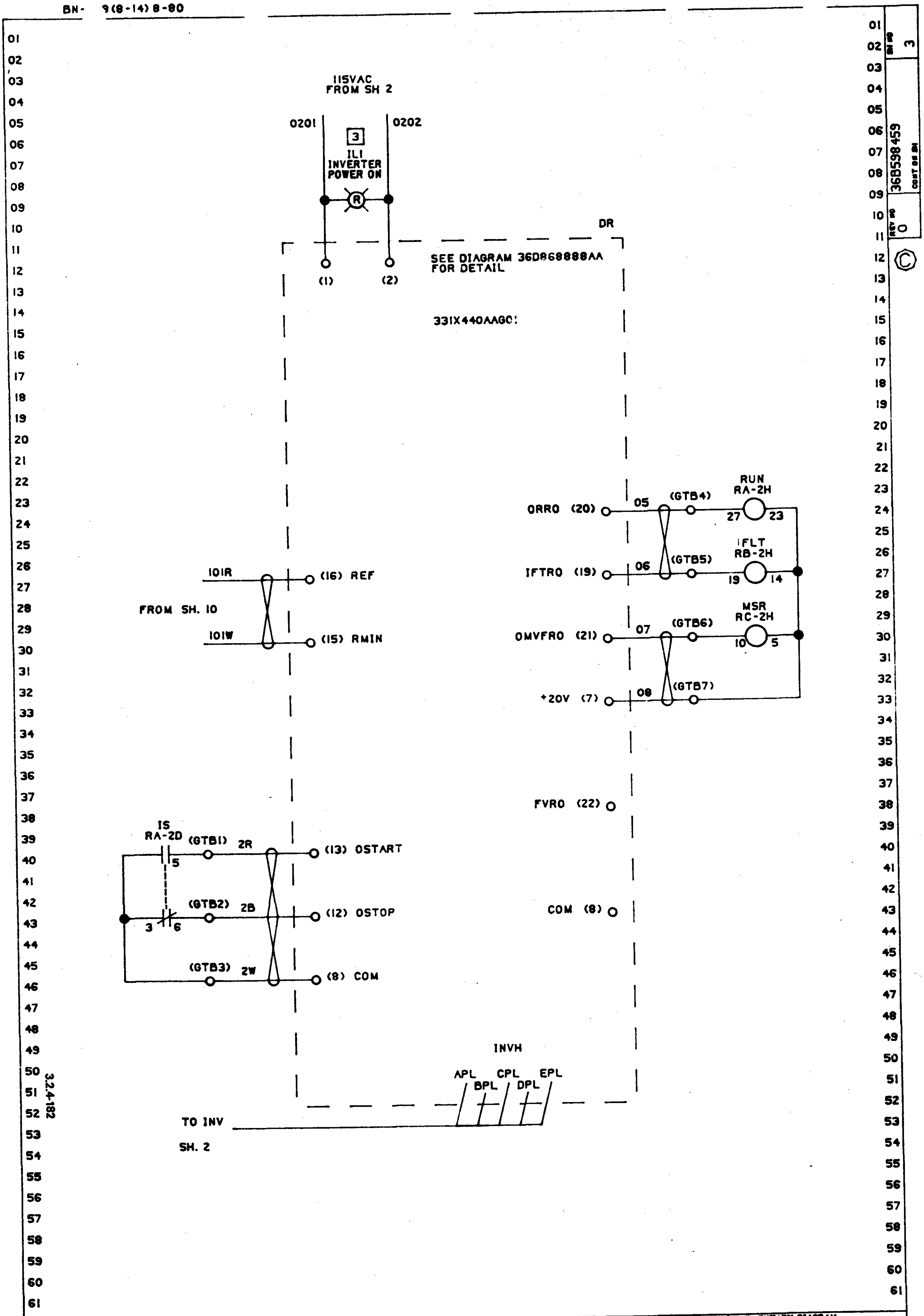

REV 3
REV 2
REV 1
APPROVED
REV 4
ISSUED
PRINTS TO 5(S)
FIRST MADE FOR REQ 480-02818-2
REV 5
MADE BY T. EASTER AUGUST 27, 1980
6V200B5079

GENERAL ELECTRIC
SPEED VARIATOR PROD DIV OR DEPT
ERIE PA LOCATION

ELEMENTARY DIAGRAM
DRIVER
36B598459
SH NO 3
CONT ON SH

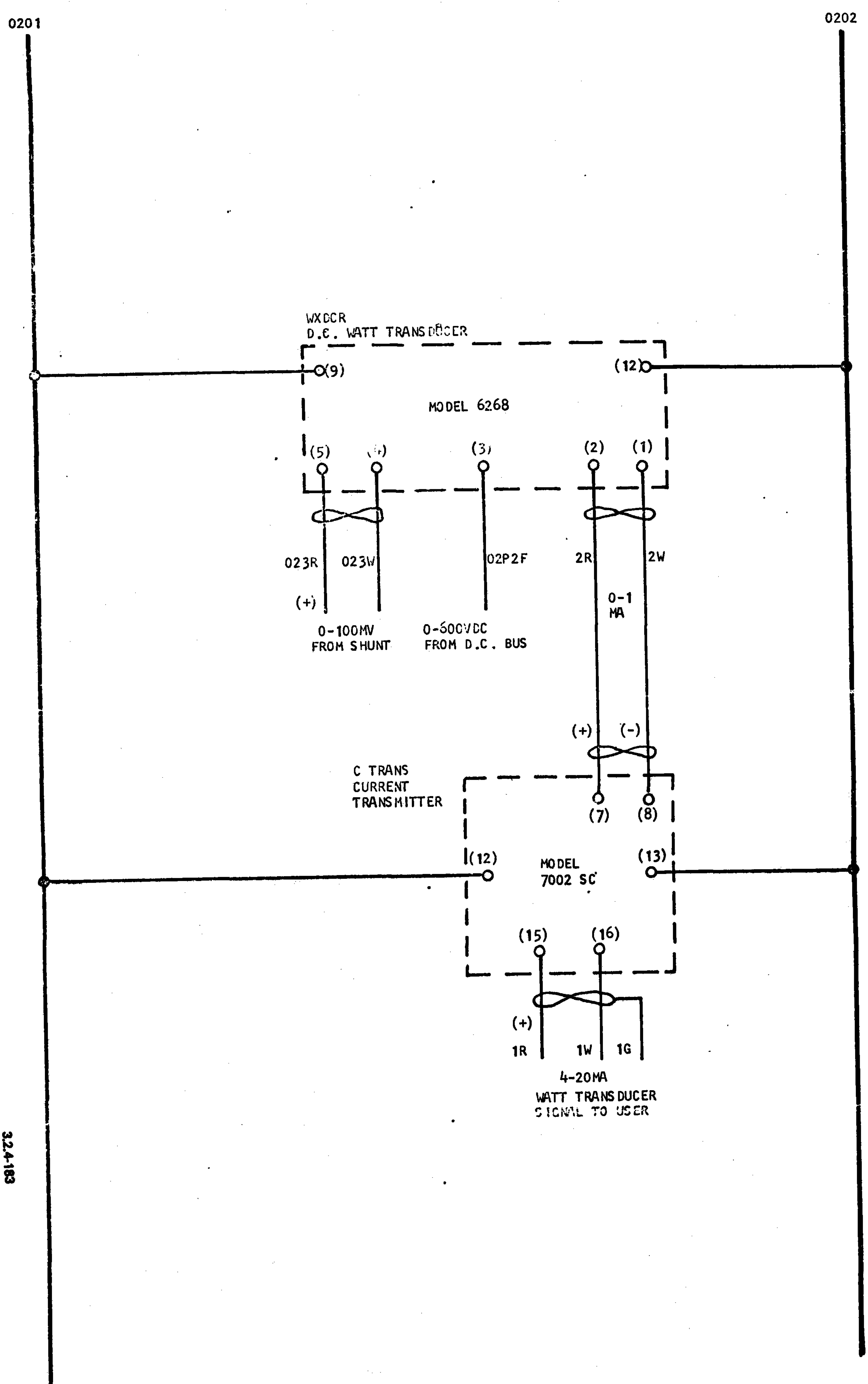

32.4-183

REV. 3	REV. 2	REV. 1	APPROVALS	**GENERAL ELECTRIC** SPEED VARIATOR DEPT. ERIE, PA. U.S.A.
REV. 4	ISSUED 9/15		FIRST MADE FOR REQ. 480-02818-2	
REV. 5	D. Carrington Aug 21, 1980		6V200B5079	

ELEMENTARY DIAGRAM

36B598459

CONT. ON SH.

SH. NO. 4

M

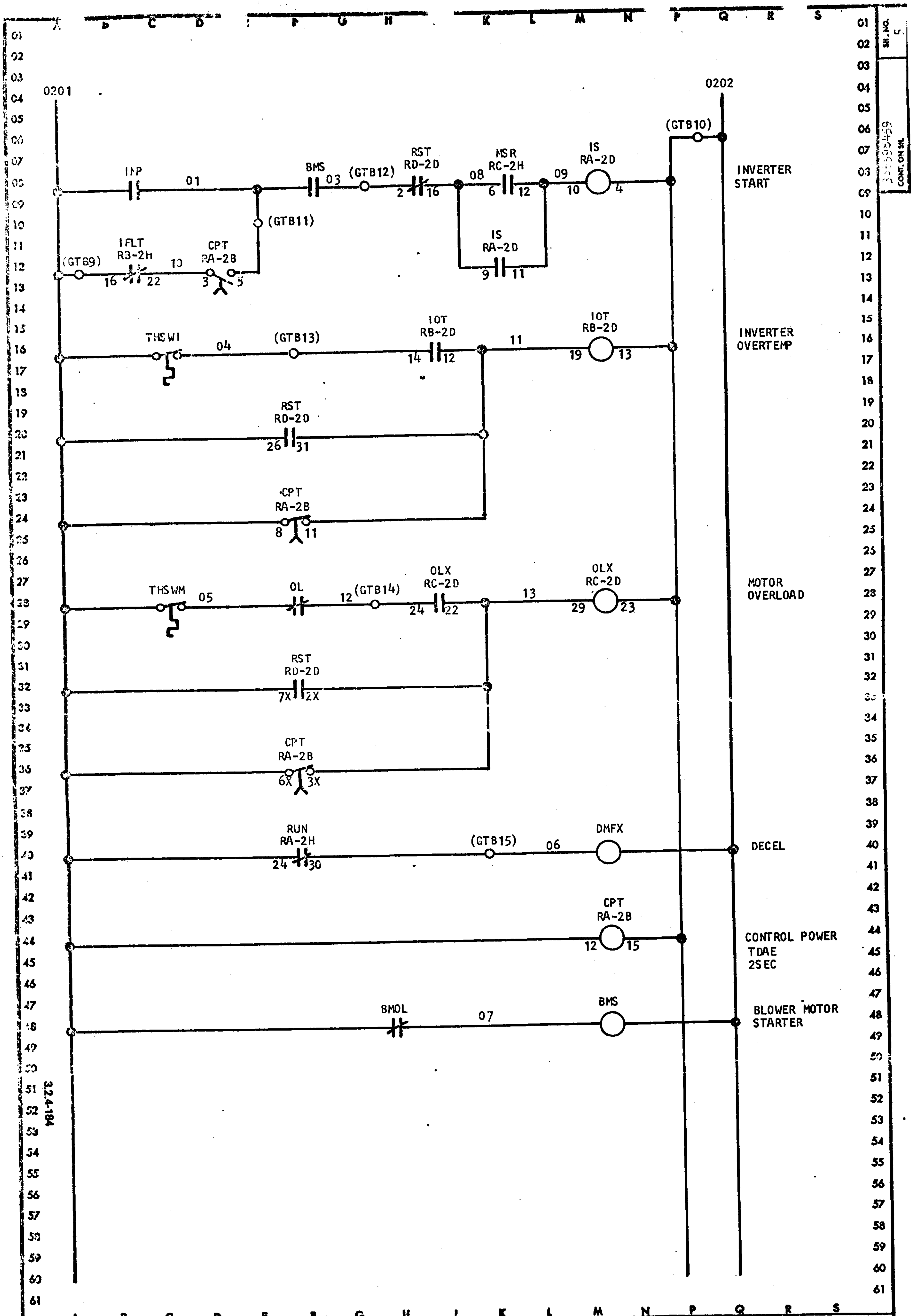

REV. 3	REV. 2	REV. 1	APPROVALS
REV. 4			FIRST MADE FOR S.O. 480-02818-2
REV. 5	W. Orrington Aug. 27, 1980		6V200B5079

GENERAL ELECTRIC
SPEED VARIATOR DEPT.
ERIE, PA. U.S.A.

ELEMENTARY DIAGRAM
36B598459
CONT. ON SH.
SH. NO. 5

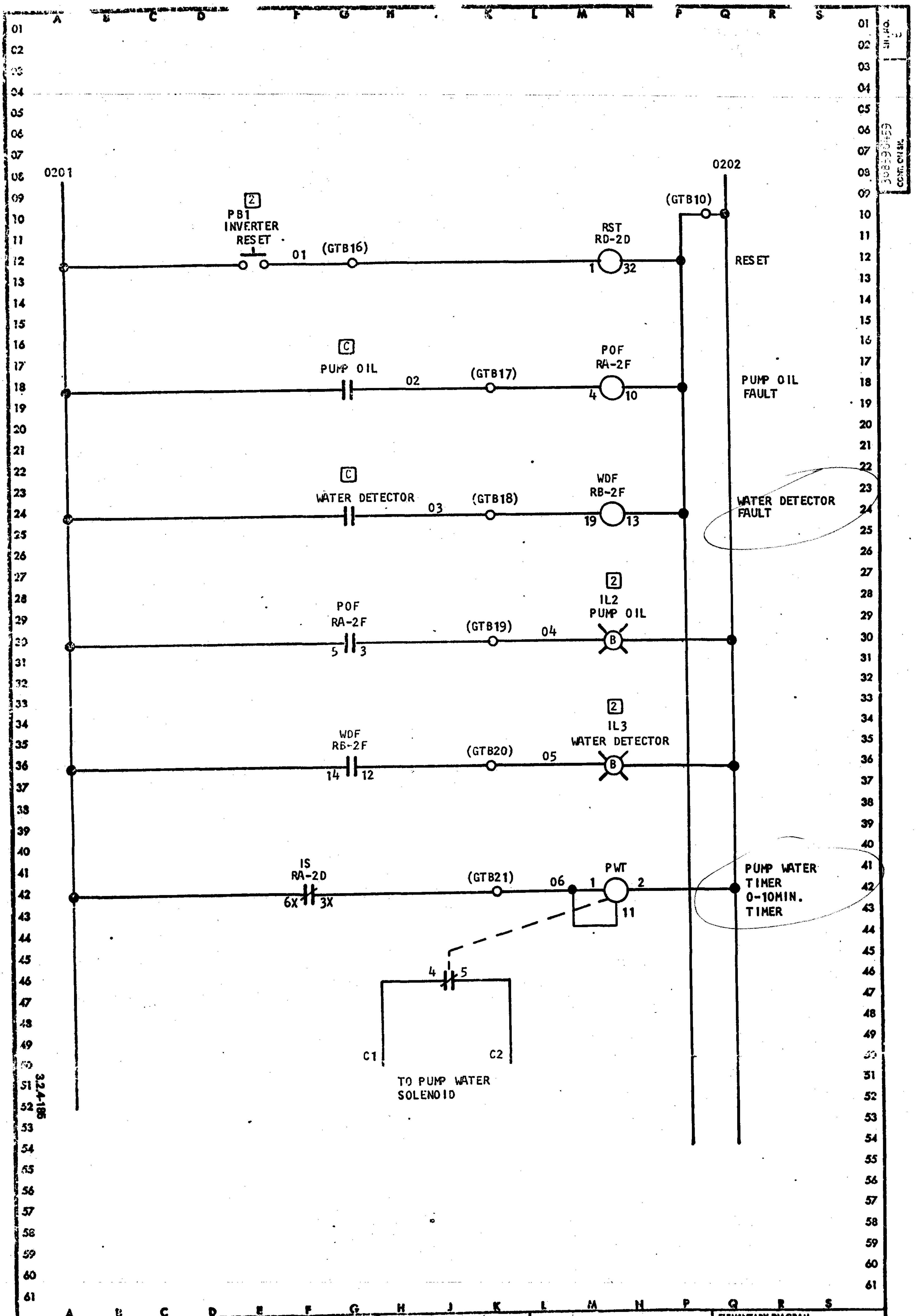

REV. 3	REV. 2	REV. 1	APPROVALS	**GENERAL ELECTRIC** SPEED VARIATOR DEPT. ERIE, PA. U.S.A.	ELEMENTARY DIAGRAM
REV. 4			FIRST MADE FOR 480-02818-2		36B598459 CONT. ON SH.
REV. 5	Aug. 27, 1980		6V200B5079		SH. NO. 6

M

BN-632(10-79)

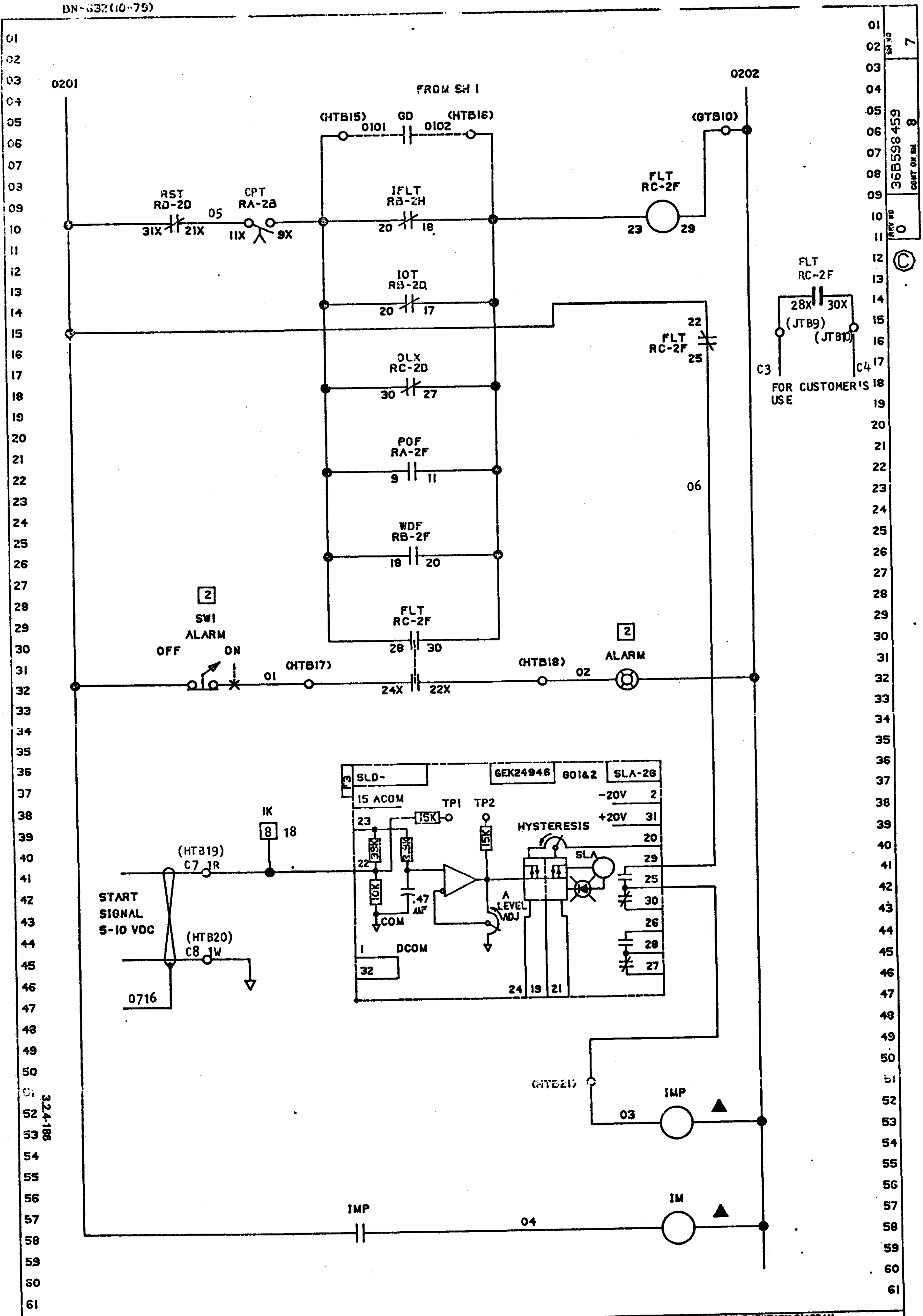

REV 3	REV 2	REV 1	APPROVED	GENERAL ELECTRIC	ELEMENTARY DIAGRAM
REV 4	ISSUED	PRINTS TO 5(S)	FIRST MADE FOR REQ 480-02818-2	SPEED VARIATOR PROD DIV OR DEPT	36B598459
REV 5	MADE BY T. EASTER AUGUST 27, 1980		6V200B5079	ERIE PA LOCATION	CONT ON SH 8

SH NO 7

I 632(10-75)

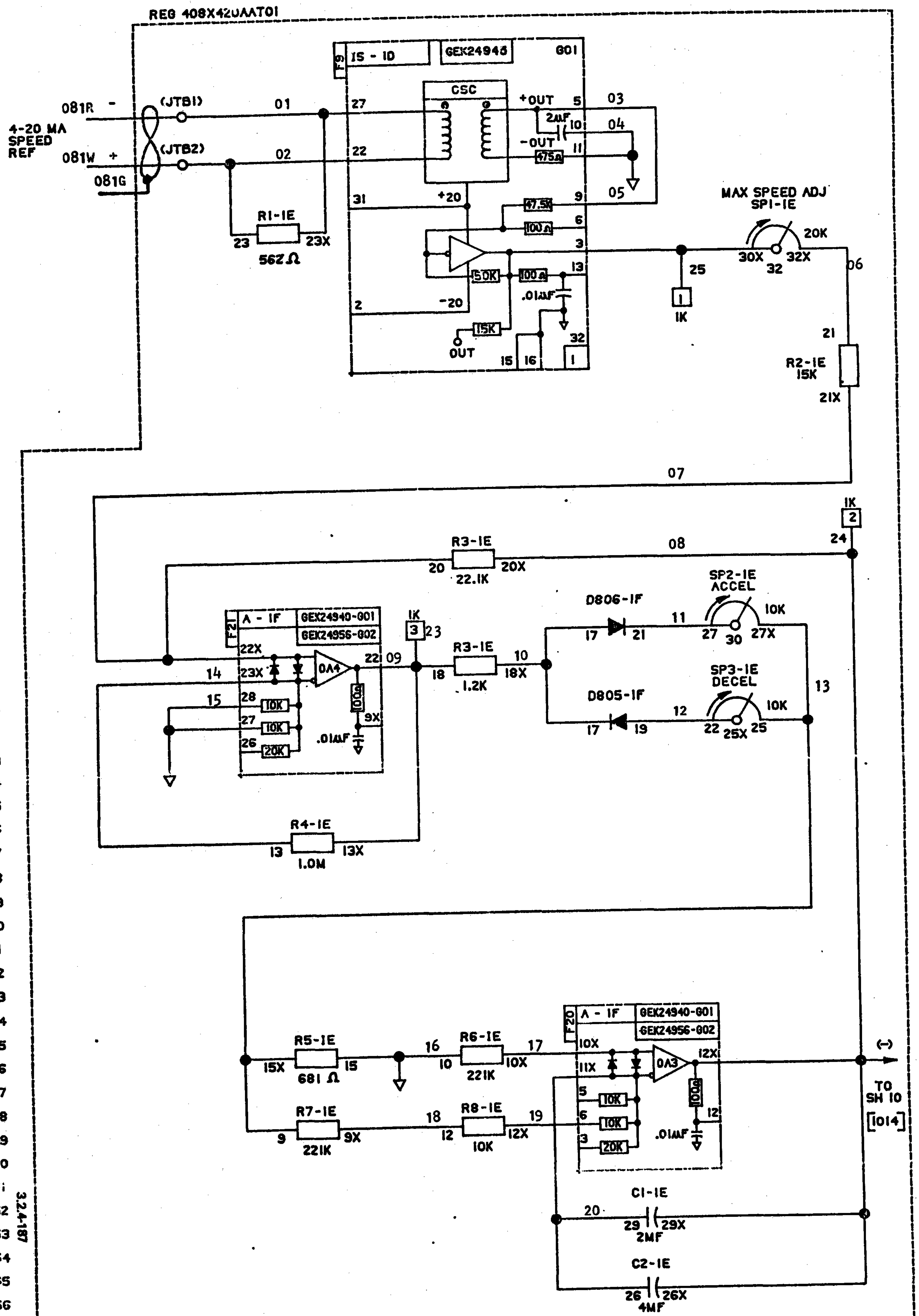

36B598459

REV NO 0

©

REV 3	REV 2	REV 1 [illegible]	APPROVED 7/1/81	GENERAL ELECTRIC	ELEMENTARY DIAGRAM
REV 4	ISSUED [illegible] 4/15/81	PRINTS TO 5(S)	FIRST MADE FOR REQ 480-02818-2	SPEED VARIATOR PROD DIV OR DEPT	36B598459 / SH NO 8
REV 5	MADE BY T. EASTER AUGUST 27, 1980			ERIE PA LOCATION	CONT ON SH 9

m

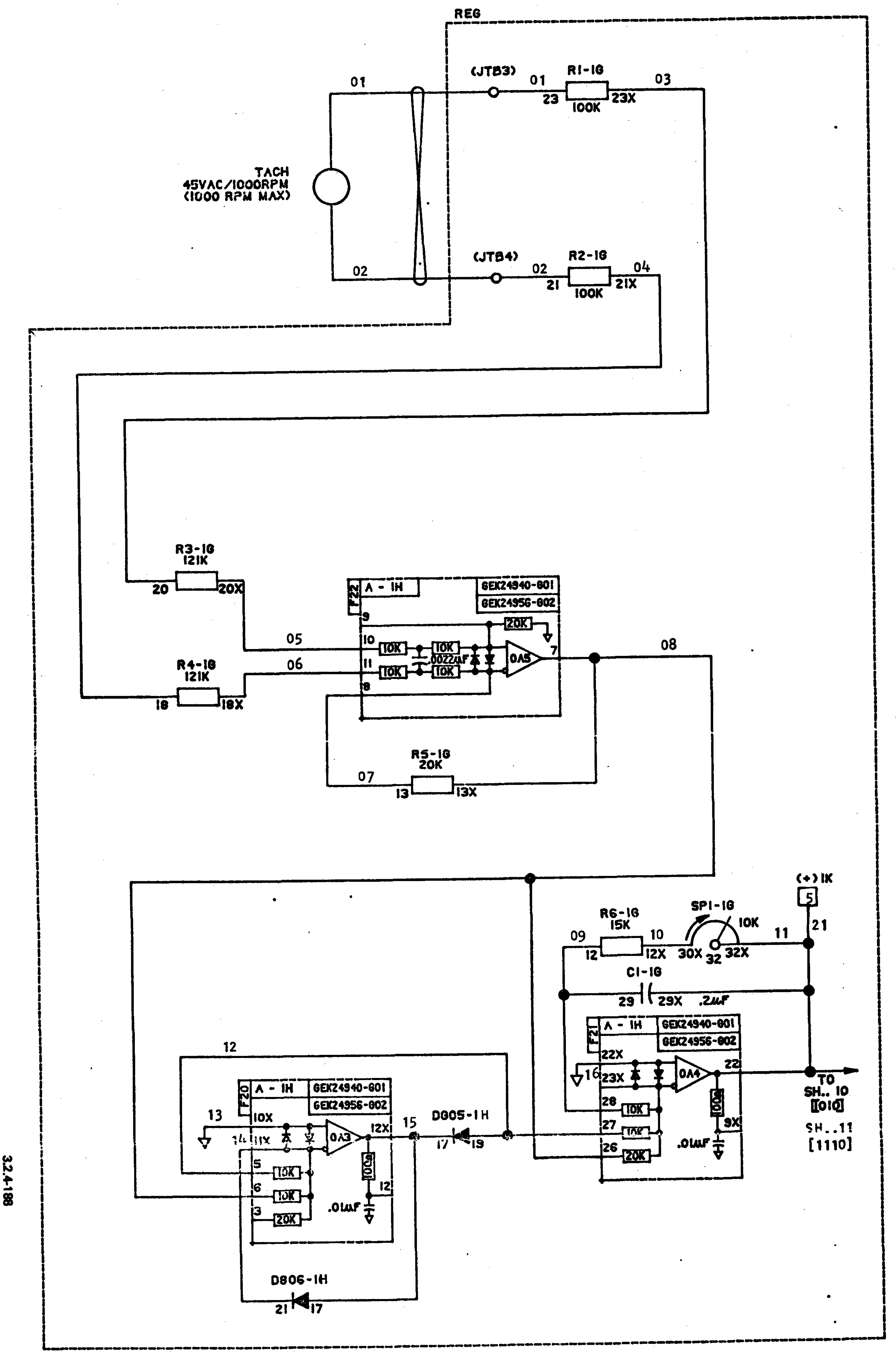

REV 3	REV 2	REV 1	APPROVED	GENERAL ELECTRIC	ELEMENTARY DIAGRAM
REV 4	ISSUED	PRINTS TO 5(S)	FIRST MADE FOR REQ 480-02818-2	SPEED VARIATOR PROD DIV OR DEPT	36B598459 — SH NO 9
REV 5	MADE BY T. EASTER AUGUST 27, 1980			ERIE PA LOCATION	CONT ON SH 10

BN-632(10-79)

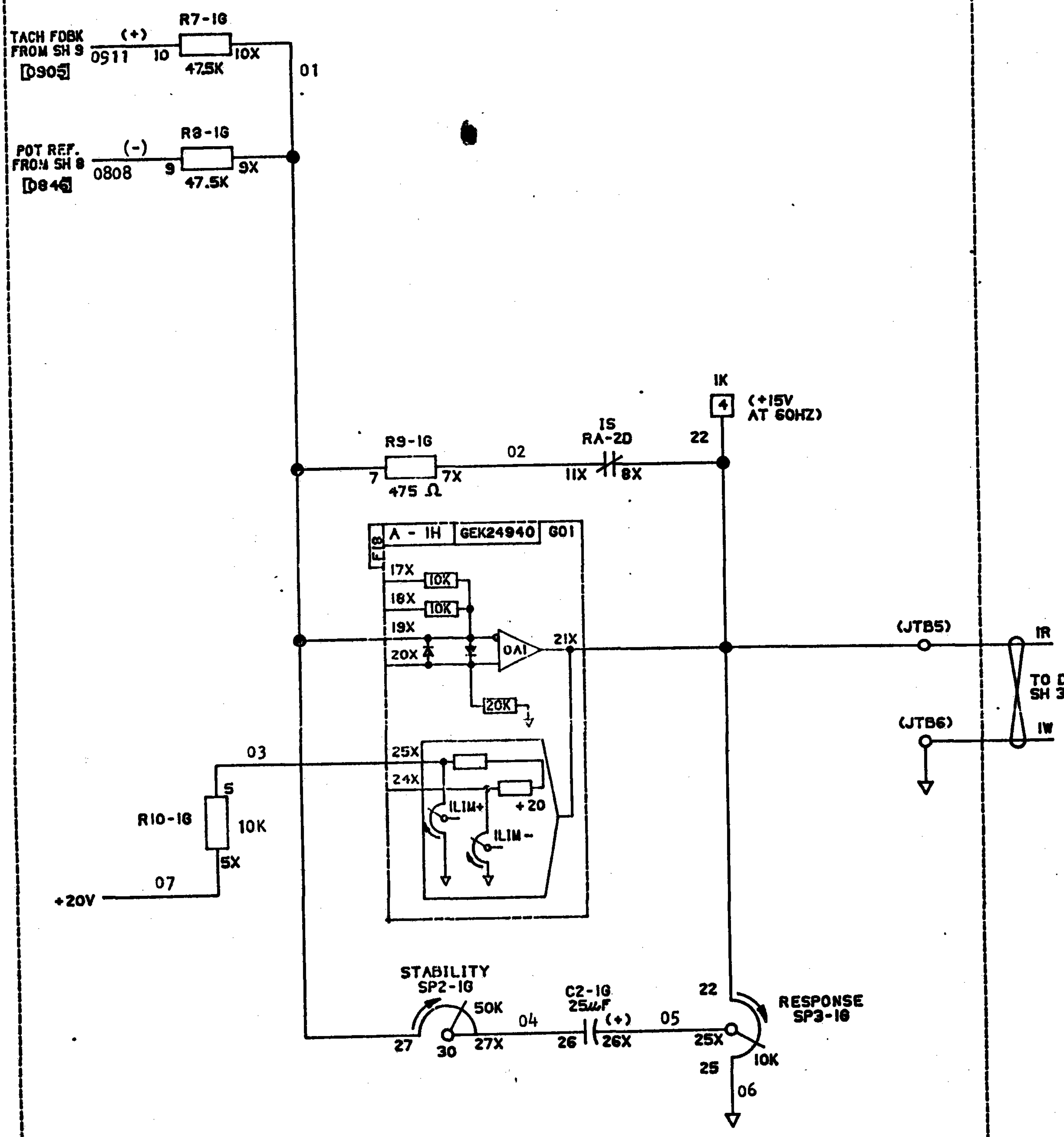

3.2.4-189

REV 3	REV 2	REV 1	APPROVED	GENERAL ELECTRIC	ELEMENTARY DIAGRAM REGULATOR
REV 4	ISSUED 2/5/81	PRINTS TO 5(S)	FIRST MADE FOR REQ 480-02818-2	SPEED VARIATOR PROD DIV OR DEPT	36B598459
REV 5	MADE BY T. EASTER AUGUST 27, 1980			ERIE PA LOCATION	CONT ON SH 11

SH NO 10

SH NO 10
36B598459
CONT ON SH 11
REV NO 0

©

SH NO 11
36B598459
CONT ON SH 12
REV NO 0

Ⓒ

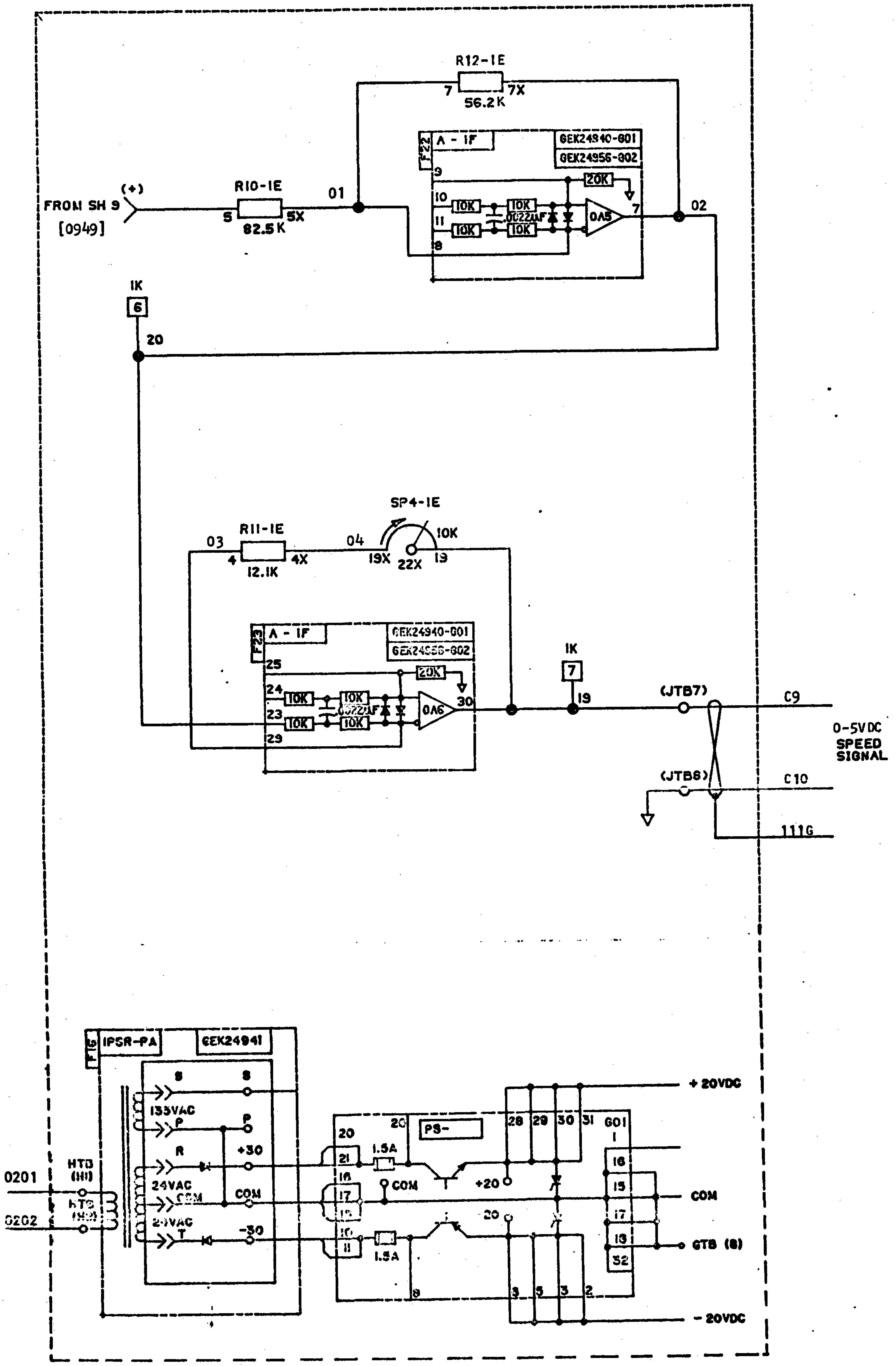

3.2.4-180

REV 3
REV 4
REV 5
REV 2
ISSUED
MADE BY T. EASTER AUGUST 27, 1980
REV 1
PRINTS TO S(S)
APPROVED
FIRST MADE FOR REQ 480-02818-2

GENERAL ELECTRIC
SPEED VARIATOR PROD DIV OR DEPT
ERIE PA LOCATION

ELEMENTARY DIAGRAM
36B598459
CONT ON SH 12
SH NO 11

SH. NO. 12	36B598459 CONT. ON SH. FL	REV. NO. 0

(FRONT VIEW OF RACK IN CLOSED POSITION)

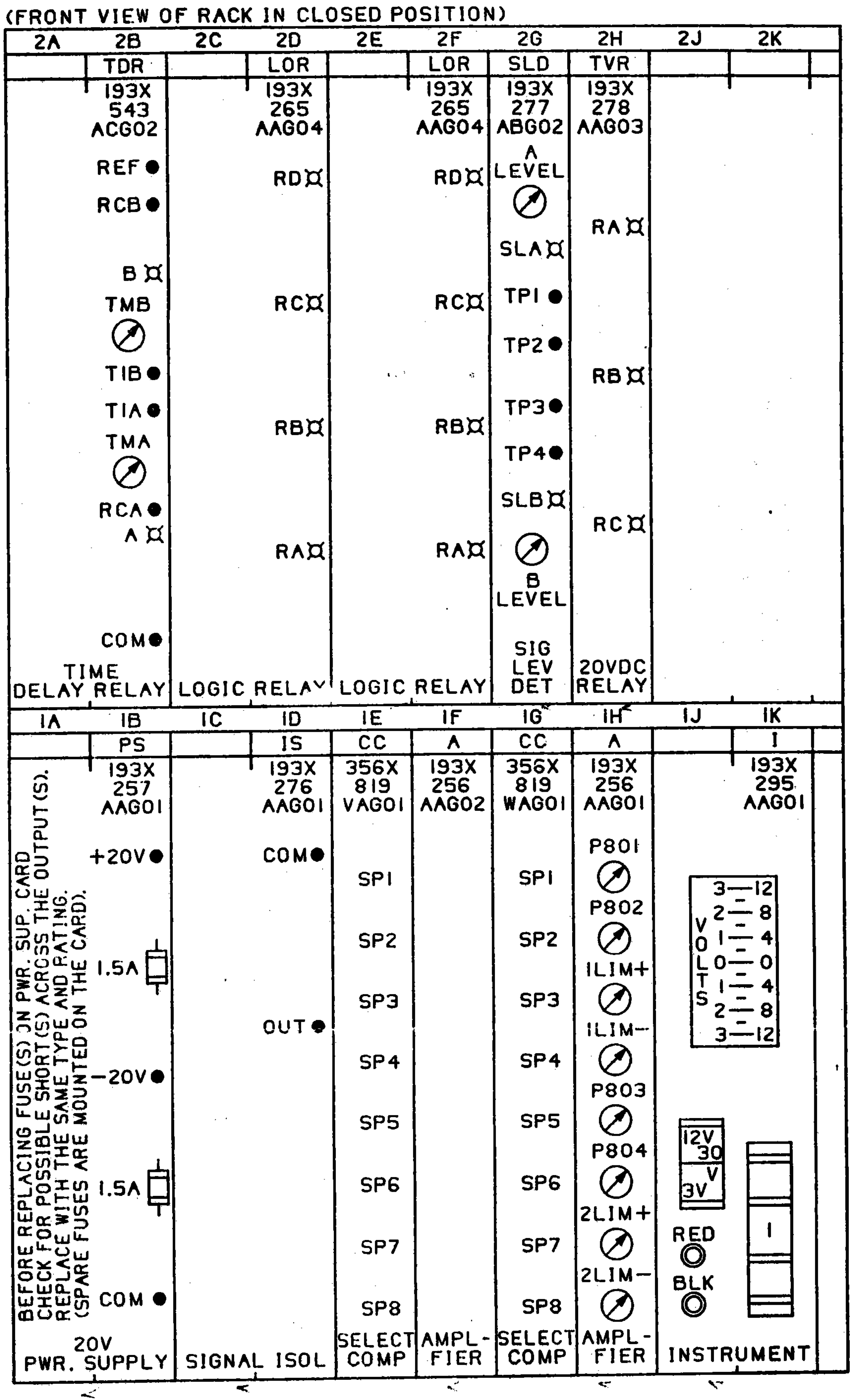

BEFORE REPLACING FUSE(S) ON PWR. SUP. CARD CHECK FOR POSSIBLE SHORT(S) ACROSS THE OUTPUT(S). REPLACE WITH THE SAME TYPE AND RATING. (SPARE FUSES ARE MOUNTED ON THE CARD).

ON PRINTED CIRCUIT CARDS USED IN THIS RACK THE LETTERS "AA" AFTER BASIC CATALOG NUMBER INDICATES ORIGINAL DESIGN. SUBSEQUENT DESIGNS WITH THE SAME BASIC NUMBERS AND GROUP NUMBER WITH THE SECOND LETTER CHANGED, SUCH AS AB, AC, AD, ETC., ARE DIRECTLY INTERCHANGEABLE AND MAY BE SUPPLIED IN PLACE OF THE "AA" CARDS.

THE PRINTED CIRCUIT CARD SHOULD ALWAYS BE REMOVED WITH THE CARD EXTRACTOR WHICH IS ATTACHED ON TOP OF THE CARD RACK. SOME CARDS CONTAIN PARTS WHICH WILL BE THERMALLY HOT AFTER BEING IN OPERATION. CARE SHOULD BE EXERCISED IN HANDLING ALL CARDS AFTER REMOVAL UNTIL THESE PARTS HAVE COOLED.

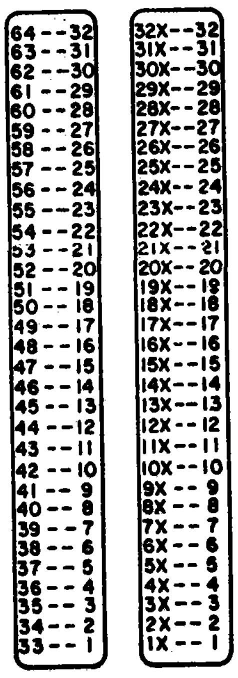

FRONT VIEW OF 64 PIN RECEPTACLE AS SEEN IN RACK CLOSED POSITION.

NOTE: RECEPTACLE PINS MAY BE NUMBERED AS SHOWN IN EITHER SKETCH. (PIN 33 CORRESPONDS TO PIN IX, 34 TO 2X, ETC.)

SKETCH "A"

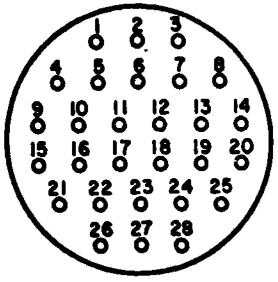

FRONT VIEW FROM PLUG SIDE

SYMBOLS

● – TEST POST

⊘ – POT ADJUSTMENT

¤ – INDICATING LIGHT

3.24-191

F2(9-77)

ORIGINAL TRACING

REV. 3	REV. 2	REV. 1	APPROVALS Y/M	GENERAL ELECTRIC SPEED VARIATOR ERIE, PA. U.S.A.	LAYOUT DIAGRAM
REV. 4	ISSUED C.E. KEEBLKKN 4/15/76	PRINTS TO 5(S)	FIRST MADE FOR REQ. 480-02818-2		36B598459 CONT. ON SH. FL · SH. NO. 12
REV. 5	MADE BY D. Dorrington Aug. 27, 1980		408X420AAT01		

RENEWAL PARTS

GENERAL ELECTRIC 36D870755 CONT. ON SHEET 2 SH. NO. 1

TITLE CONNECTION DIAGRAM

FIRST MADE FOR 480-02818-2

CASE - 50W X 90H. X 40D. 6Y200B5079

UNLESS OTHERWISE SPECIFIED USE THE FOLLOWING:—

APPLIED PRACTICES	SURFACES	TOLERANCES ON MACHINED DIMENSIONS		
718A503 & 718A504	✓	+ –	+ –	+ –

REV. NO. 0

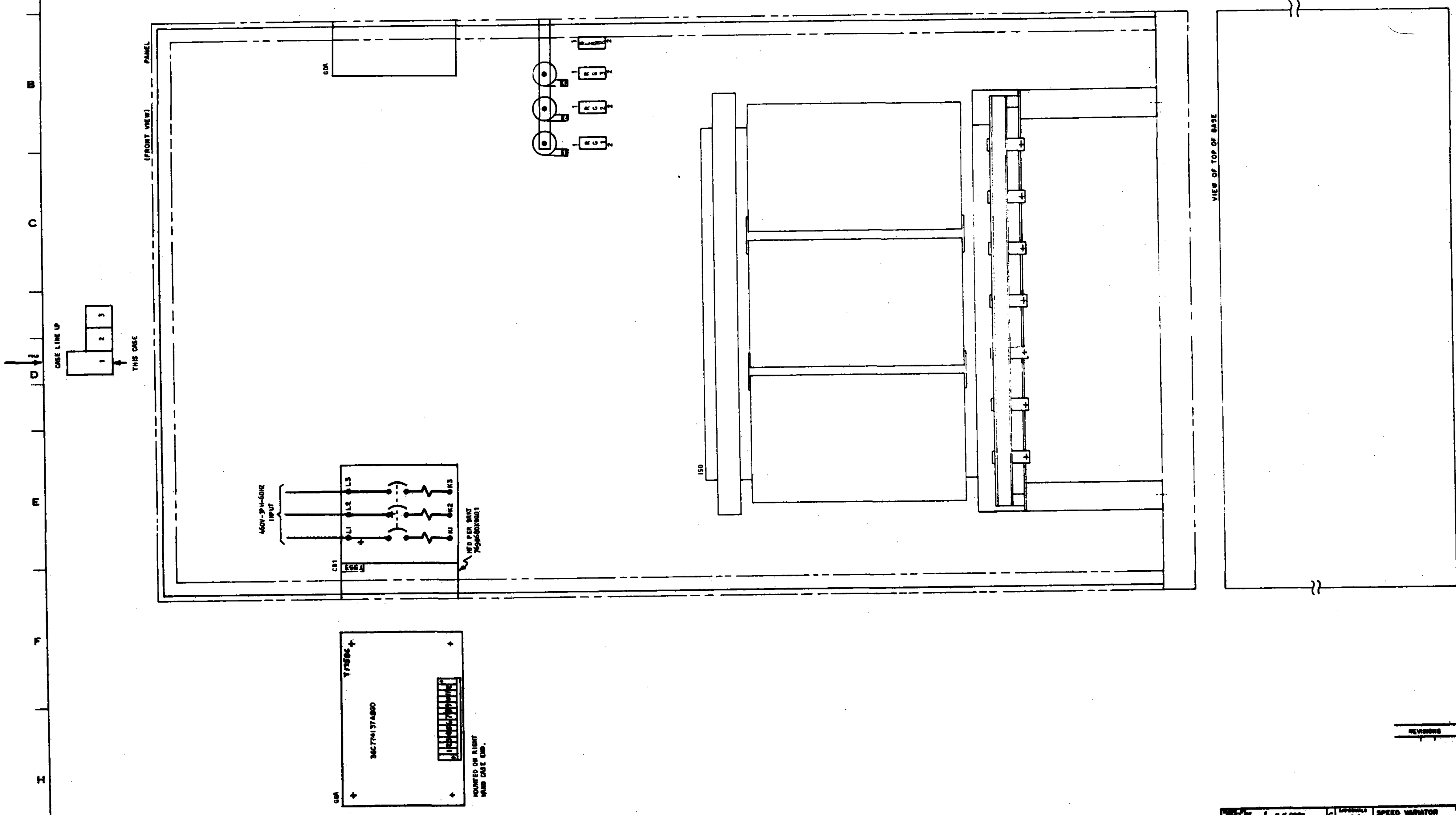

REVISIONS

PRINTS TO
B(2)

PROPRIETARY INFORMATION OF THE GENERAL ELECTRIC COMPANY

SPEED VARIATOR
ERIE, PA.
36D870755 CONT. ON SHEET 2 SH. NO. 1
316

3.2.4-193

GENERAL ELECTRIC

36D870755
CONT ON SHEET 3 SH NO. 2

TITLE LAYOUT DIAGRAM

FIRST MADE FOR 480-02818-2

CASE - 25W X 90H X 20D 6V20085079

UNLESS OTHERWISE SPECIFIED USE THE FOLLOWING

APPLIED PRACTICE 718A503 & 718A504

SURFACES ✓

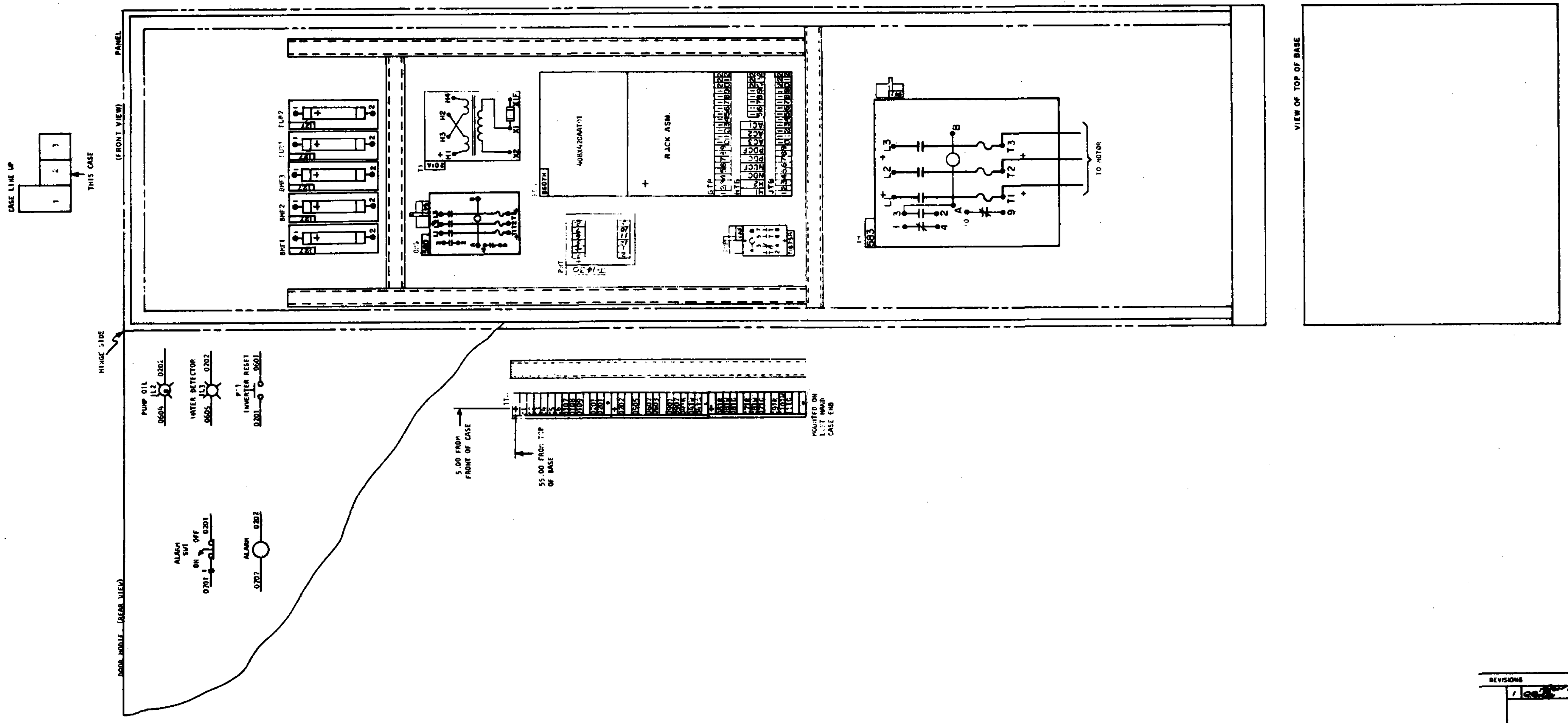

REVISIONS
1

PRINTS TO
S(S)

Sept. 11, 1980

SPEED VARIATOR
ERIE, PA

36D870755
CONT ON SHEET 3 SH NO. 2

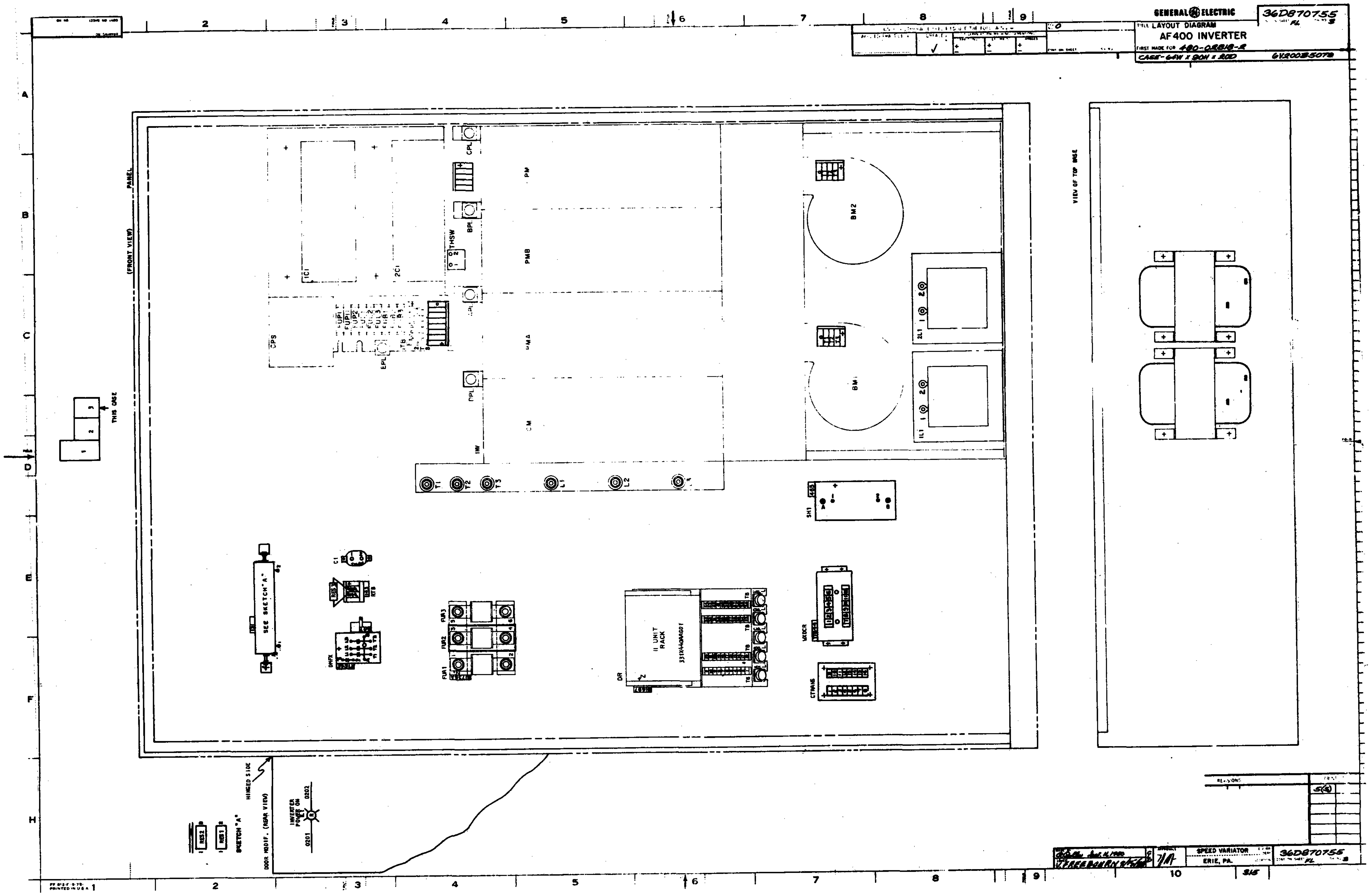

GENERAL ELECTRIC

36D870755

FL 3

LAYOUT DIAGRAM

AF400 INVERTER

FIRST MADE FOR 480-02818-2

CASE-64W x 90H x 20D

6V200B5078

SPEED VARIATOR

ERIE, PA.

V. FREEBOURN

36D870755

FL 3

5(5)

3.3 SUBSTATIONS

Equipment Number	Description	Maintenance Section	One Line Dwg. Number
CSF 001A thru CSF 0001M	Heliostat Power Centers	3.3.1	40E7005133106

3.3.1 Heliostat Power Centers

3.3.1.1 Identification

Tag Number	Description
CFS 0001A thru CFS 0001M	4160 Oil Filled Distribution Transformers with 120/208 volt distribution panels

3.3.1.2 Description

Manufacturer:	Westinghouse Electric Corp. Jefferson City, Mo. 65101
Type:	Eleven Ttransformers Style A42A120KP2 Two Transformers Style A42A120KN3 One Transformer Style A42A120KN2

3.3.1.3 Vendor

Wesco
1661 W. 3rd Ave
Denver, CO 80223

3.3.1.4 Procurement Specification

Stearns-Roger Spec F230.6 (DOE Spec 40E500-6S)

3.3.1.5 Operation/Maintenance

See attached Westinhouse manual, section D.

Instructions for Oil-Immersed Distribution Transformers

I.B. 46-060-1
Section D

Section D: Pad-Mounted, 75-1500 KVA, Three-Phase

GENERAL

These instructions apply to three-phase oil-immersed pad-mounted distribution transformers. Read these instructions carefully before attempting to install, operate, maintain, or store the transformers.

The equipment covered by these instructions should be operated and serviced only by competent personnel familiar with good safety practices. These instructions are written for such personnel and are not intended as a substitute for adequate training and experience in the use of this equipment. These instructions do not purport to provide for every possible contingency that might be encountered in the installation, operation and maintenance of this equipment. Should clarification or further information be required or should problems arise which are not covered sufficiently for the user's purposes, refer the matter to the Westinghouse Electric Corporation.

Westinghouse is not responsible for the adequacy of instructions provided by suppliers of non-Westinghouse components which may be incorporated in this equipment and any additional information required should be obtained from such suppliers.

INTRODUCTION

The three-phase pad-mounted transformer is designed to provide service for such electrical underground distribution loads as shopping centers, schools, institutions and industrial plants. The transformer is designed for outdoor mounting on a pad. The primary and secondary cables enter the transformer from below, through openings in the pad. All live parts are completely enclosed in tamper-resistant compartments with provision for locking.

RECEIVING

Westinghouse three-phase pad-mounted distribution transformers are normally shipped completely assembled and ready to install. Each transformer should be carefully inspected upon receipt and the transportation company notified of any damage that has been incurred. The shipping list should be checked for possible shortages.

Three-phase transformers rated 500 kVA and below are shipped on a pallet, being securely attached to the pallet by means of straps banded to the lifting lugs. Palletized transformers in these ratings may be moved readily by a lift truck, crane, or cart. The lifting lugs supplied on the sides of the transformer enable it to be lifted by crane.

Three-phase transformers rated 750 kVA and above are shipped on flat bed or open topped trucks due to the size and configuration of the transformer. Similar lifting lugs on the sides of the transformer enable it to be lifted by crane.

Lift the transformer utilizing all the lugs and use proper spreaders to obtain a vertical lift.

CAUTION: **DO NOT LIFT THE TRANSFORMER BY USING CRANES OR JACKS ON ANY PART OF THE TRANSFORMER OTHER THAN THE LIFTING LUGS OR JACKING AREAS PROVIDED FOR THIS PURPOSE. IMPROPER LIFTING OR JACKING MAY RESULT IN SERIOUS PERSONAL INJURY AND DAMAGE TO PROPERTY.**

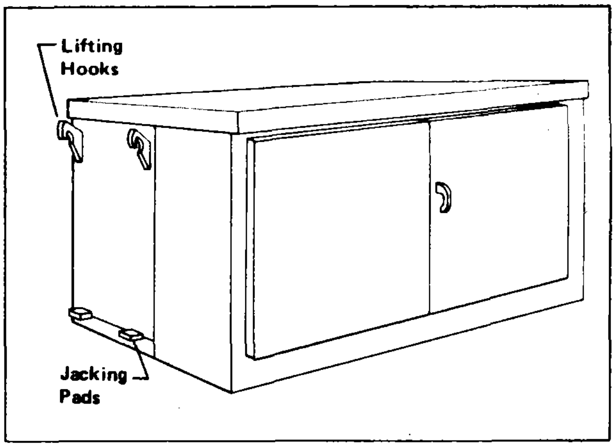

Fig. 1 *Lifting Provisions*

INSPECTION

The unit has been carefully assembled, filled with oil, tested, and sealed at the factory.

The oil level can be checked by means of the liquid level gauge or by removing the oil level plug which is located at the 25°C oil level.

Any unit which does not have the proper oil level should be checked for leaks and refilled through the vent plug before placing it in service. Use only quality oil per ASTM D3487 when adding oil to the transformer. Note: Extreme care should be taken to use oil free of any PCB contamination to avoid future problems with disposal regulations.

Tighten any parts that may have worked loose during shipment. Internal inspection is not required for this unit; however, if the transformer must be opened for internal inspection or fuse replacement, take proper care to prevent the entrance of moisture or other foreign matter into the transformer. For access, first vent the transformer, then remove the weather cover and the handhole cover, placing the nuts and washers in storage for reuse.

To remove the weather cover, both left and right hand doors must be open. Loosen the wing nut assembly inside the cabinet near each top front corner. Lift the front of the cover and rotate 180° about the hinges mounted at the rear of the tank, then support the cover or slide it off of the hinges to remove it.

Effective April, 1979

SR No F230.6 File No 4

When re-assembling the handhole, replace the gasket if there is evidence of damage or its thickness is less than 0.12 inches. The gasket should be compressed to a thickness of from 0.12 to 0.15 inches; however, the nuts should not be tightened greater than 20 ft-lbs.

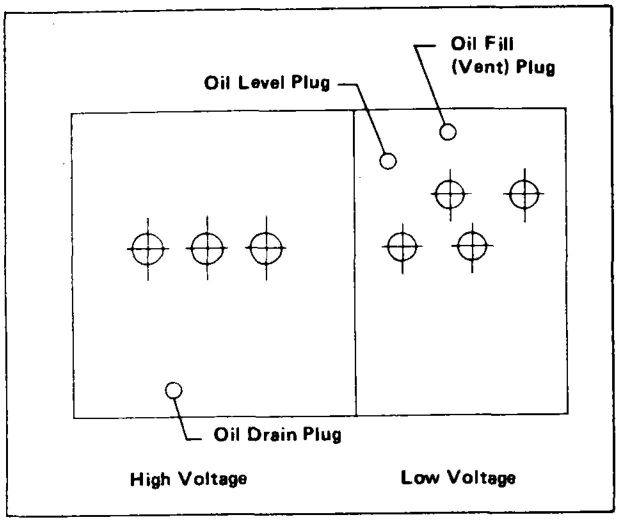

Fig. 2 *Oil Plugs*

STORAGE

No unusual precautions for storing need to be taken because pad-mounted transformers are built for outdoor service. However, the transformer should be stored with the tank sealed and filled with oil and the units must not be stacked on top of one another. The compartment doors should be in the closed position to protect the bushings and other accessories from damage. Care must be exercised to prevent submersion in water.

The purchaser should perform a final inspection of each transformer prior to installation.

MAINTENANCE

A periodic visual inspection of the external parts of the transformer is desirable. At such times, the general condition of the following should be noted:

1. High voltage bushings and leads
2. Low voltage bushings
3. Arresters (if provided)
4. Tamper resistance of cabinet, especially cabinet hinges and latching provisions
5. Any signs of oil leakage
6. Finish on tank
7. Ground connections
8. Accessories including warning and instruction labels.

Where parts have been broken, or where any sign of oil leakage is observed, the transformer should be removed from service until repairs can be made.

CAUTION: **WHEN BROKEN PARTS, LEAKING OIL OR OTHER POTENTIALLY HAZARDOUS CONDITIONS ARE OBSERVED, REMOVE THE TRANSFORMER FROM SERVICE UNTIL REPAIRS CAN BE COMPLETED. FAILURE TO DO SO MAY RESULT IN VIOLENT FAILURE OF THE TRANSFORMER CAUSING HAZARD TO LIFE AND PROPERTY.**

Where tanks show evidence of rusting or deterioration of the finish, they may be cleaned and retouched with paint available for that purpose. When bare metal is exposed, a primer should be also applied.

Periodically, the condition of the oil should be inspected and, if necessary, the oil should be removed and replaced with good, clean, dry oil per ASTM D3487.

A periodic check of the load should be made to insure that the transformer is not being unduly overloaded. Planned overloading should be in accordance with the ANSI *Loading Guiding* (C57.91).

Whenever replacement parts or information regarding existing transformers are required, complete nameplate data including kVA rating, style number, serial number, and a description of the part should be given to Westinghouse.

INSTALLATION

Installation should comply with the latest edition of the National Electrical Safety Code.

Mounting

The transformer should be mounted on a level pad strong enough to support the weight of the transformer. The unit should not be tilted in any direction greater than 1.5 degrees. Tilt of the transformer should be kept to a minimum, especially when it will cause deviations in oil level near drawout fuses, pressure relief devices, or other accessories specifically located with respect to the 25°C oil level.

Brackets are supplied for bolting the transformer securely to the pad.

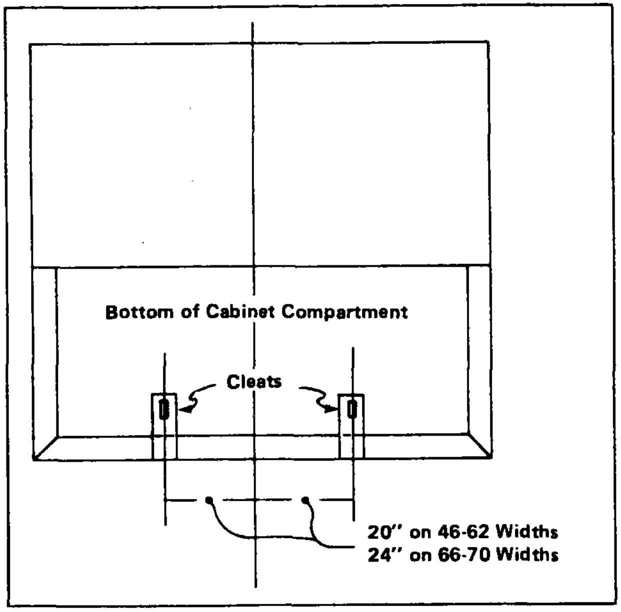

Fig. 3 *Mounting Provision*

The transformer cabinet should sit flush on the pad allowing no gaps which would compromise the tamper resistance of the transformer.

CAUTION: SINCE THESE TRANSFORMERS CONTAIN A FLAMMABLE INSULATING FLUID (MINERAL OIL), TRANSFORMER FAILURE CAN RESULT IN FIRE AND/OR EXPLOSION. THIS POSSIBILITY SHOULD BE CONSIDERED WHEN LOCATING THESE TRANSFORMERS IN CLOSE PROXIMITY TO BUILDINGS OR PUBLIC THOROUGHFARES.

Venting

The transformer should be vented to the atmosphere before it is placed in service if it has been pressurized for leak test or if the unit has been opened and resealed when the temperature was above or below 25°C. Venting should take place at approximately 25°C to prevent excessive operating pressures or vacuums from developing. Vent the transformer by removing the vent plug or by operating the pressure relief device normally provided.

Grounding

A good permanent low impedance ground connection must be made to the tank by means of the ground pad provided for this purpose near the bottom of the tank.

CAUTION: IMPROPER GROUNDING CAN CAUSE HIGH VOLTAGE ON METALLIC PARTS OF THE TRANSFORMER TANK AND TRANSFORMER SECONDARY TERMINALS RESULTING IN DANGER TO LIFE AND PROPERTY.

Transformers which are designed for use on a grounded wye system, that is one having a solidly grounded neutral, must have the tank and other available neutrals permanently and solidly grounded to the common neutral of the system before the transformer energized.

CAUTION: TRANSFORMERS WITH UNGROUNDED SECONDARY WINDINGS, SUCH AS WITH THE DELTA, OPEN DELTA, AND FLOATING WYE CONNECTIONS, MAY UNDER CERTAIN CONDITIONS HAVE VOLTAGES AS HIGH AS THOSE OF THE PRIMARY SUPPLY SYSTEM APPEARING FROM TERMINAL-TO-GROUND. SUCH VOLTAGES CAN RESULT IN DANGER TO LIFE AND PROPERTY.

Connections

CAUTION: ALWAYS ASSUME THAT TERMINALS ARE ENERGIZED UNLESS CHECKED AND GROUNDED. DO NOT RELY ON FUSE REMOVAL, SWITCH POSITION INDICATORS, OR OTHER VISUAL INDICATIONS. CONTACT WITH AN UNGROUNDED TERMINAL MAY RESULT IN ELECTRICAL SHOCK AND BURNS.

CAUTION: MAKE ONLY THE CONNECTIONS AND OPERATE ONLY AT THE VOLTAGES AUTHORIZED BY THE DIAGRAMS AND INFORMATION GIVEN ON THE TRANSFORMER NAMEPLATE. FAILURE TO DO SO CAN CAUSE DAMAGE TO THE TRANSFORMER AND DANGER TO NEARBY PERSONNEL.

CAUTION: THE TRANSFORMER MUST BE DE-ENERGIZED BEFORE CHANGING CONNECTIONS BY EITHER TAP CHANGER OR DUAL VOLTAGE SWITCH. FAILURE TO DO SO CAN CAUSE DANGER TO LIFE AND DAMAGE TO PROPERTY.

During installation, the recommended sequence of connections is to first make all ground connections, then the low voltage connections, and finally the high voltage connections. The transformer should be removed from service by reversing the above sequence of connections.

Line connections must not place such strain on the bushing terminals or insulators that would loosen the contact joints or damage the insulators.

Three-phase transformers are only designed for proper operation with all three-phases energized; operating with one or more phases open can result in unbalanced service voltages and single-phasing of the load.

Three-phase transformers may exhibit abnormal voltage and current behavior when switched one phase at a time. Three-phase switching is recommended whenever available or possible - particularity when conditions susceptable to ferroresonance exist. The highest probability of ferroresonant overvoltages occurs when ungrounded primary windings fed by underground cable circuits are switched remotely one phase at a time.

Security

Before leaving the site of an energized transformer, make sure that the cabinet is completely closed and all locking provisions are properly installed. Be certain that the terminal compartment is secured against unauthorized entry.

CAUTION: FAILURE TO SECURE THE TERMINAL COMPARTMENT COULD ALLOW ACCESS BY UNAUTHORIZED PERSONNEL RESULTING IN DANGER TO LIFE.

OPERATION

The pad-mounted transformer is an integral part of the distribution system and consideration must be given to proper protection from system disturbances. Protection from excessive voltage transients and severe overcurrents should be provided. To allow proper operation of overcurrent devices that may be supplied with the transformer, coordination with system overcurrent protection must be achieved.

HIGH VOLTAGE ACCESSORIES

CAUTION: THE TRANSFORMER AND ITS ACCESSORIES MUST BE OPERATED WITHIN THEIR RATINGS. FAILURE TO OBSERVE THESE RATINGS COULD RESULT IN SERIOUS PERSONAL INJURY AND DAMAGE TO PROPERTY.

Consult Westinghouse for the ratings of specific accessories.

Porcelain Bushings

The standard high-voltage porcelain bushing is a gasketed bushing with clamp type terminals. The clamp type terminal arrangements accommodate cables ranging from No. 8 to 250 kcmil. The high voltage terminals are oriented for vertical takeoff of primary cables entering the compartment from below.

Separable Insulated Connectors

Separable insulated connector components may be universal bushings wells, integral bushings or bushing wells with inserts installed.

All separable connector components must be dry and clear of any contaminations before connecting. Unused terminals must be capped before energizing the unit.

The separable insulated connectors may be either livebreak or deadbreak. Follow the manufacturer's instructions and warnings on the use of these terminations.

Fusing

When a protective device on the primary side of the transformer has operated, the possibility of an internal transformer fault exists.

CAUTION: OPERATION OF A PRIMARY PROTECTIVE DEVICE MAY INDICATE A FAULTED TRANSFORMER. DO NOT RE-ENERGIZE IF ANY SIGN OF FAILURE IS OBSERVED. RE-ENERGIZING SHOULD BE PERFORMED FROM A REMOTE LOCATION UNLESS THE CAUSE OF DEVICE OPERATION IS POSITIVELY IDENTIFIED AND CORRECTED. TO DO OTHERWISE PRESENTS A HAZARD OF VIOLENT TRANSFORMER FAILURE RESULTING IN DANGER TO LIFE AND PROPERTY.

To assure proper operation and coordination, a fuse device should only be replaced by one with equivalent characteristics.

Protective Links

Protective links are oil-immersed high voltage expulsion fuses designed to isolate the transformer from the distribution system in the event of a transformer fault inside the tank on the load side of the link; not to provide overload or secondary fault current protection for the transformer.

Inspection or replacement of the internal link can be accomplished by using the handhole cover.

These internal fuses can be replaced utilizing the following procedures:

1. De-energize the transformer by disconnecting all power sources from the transformer (including any secondary power sources) to avoid danger to life and property. Take proper care to prevent the entrance of moisture or other foreign matter into the transformer. The transformer should be vented prior to removing the handhole cover. Remove the weather cover and then the handhole cover, placing the nuts and washers in storage for reuse.
2. Lower the oil level below the protective links.
3. The transformer should be checked for visible arcing damage and for electrical integrity such as continuity, turns ratio and insulation strength.
4. If no signs of internal failure are observed, replace with new fuse taking care to maintain electrical clearances.
5. Reassemble the weather cover and handhole. (See "Inspection" section).
6. Refill with good, clean, dry oil per ASTM D3487.

Air-Insulated Loadbreak Drawout Current-Limiting Fuse

Three-phase pad-mount transformers are supplied with an air-insulated drawout current-limiting fuses when specified. The fuse holder is a single-pole loadbreak and load make device, allowing the transformer to be de-energized by withdrawing the fuse from the transformer with a hot line tool.

High-voltage current-limiting fuses are designed to limit the flow of current (and energy) to a low impedance fault. Like protective links, their purpose is to isolate the transformer from the distribution system in the event of an internal transformer fault. Current-limiting fuses are applied when the available system fault current exceeds the interrupting capability of the protective links.

To open primary – Attach a hot line tool to the hookeye, stand to one side and rapidly pull the fuse completely from the holder.

To replace fuse – Disassemble parts from spent fuse. Assemble detail parts to new fuse per instruction decal on transformer. Replace any worn or damaged parts.

To close primary – Attach a hot line tool to the hookeye. Insert the end of the fuse into the opening until the upper contacts just enter the fuse tube. Stand to one side and rapidly push the assembly straight into the holder until the dust cap seats into the spring retainers.

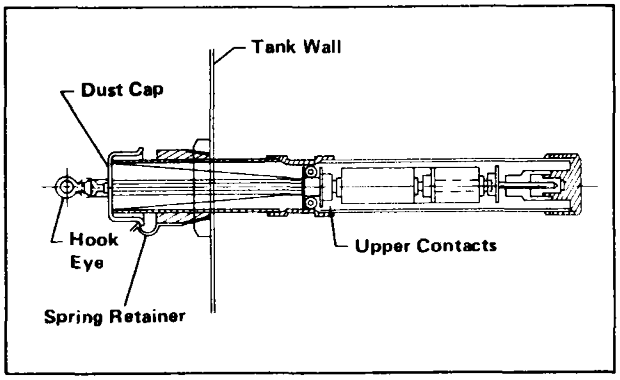

Fig. 4 *Drawout Current-Limiting Fuse*

Bayonet[1] Oil Fuse

Three-phase transformers are supplied with bayonet[1] oil fuses when specified. The bayonet[1] itself is a way of replacing an under oil expulsion fuse link in the field, and has single-pole loadbreak capability allowing it to be used as a switch to energize and de-energize a transformer.

It is recommended that the initial energization of transformers be accomplished through the use of loadbreak terminators, switches, cutouts, and other line sectionalizing devices.

CAUTION: ANY LOADBREAK DEVICE IS SUBJECT TO VIOLENT FAILURE. WE THEREFORE RECOMMEND RE-ENERGIZING, WHENEVER POSSIBLE FROM A REMOTE LOCATION INSTEAD OF USING THE BAYONET TO CLOSE IN ON POTENTIAL FAULT CURRENT. VIOLENT FAILURE CAN CAUSE PERSONAL INJURY AND PROPERTY DAMAGE.

When replacing a blown fuse, re-energize from a remote location. This procedure is an added precaution when picking up load and after a fuse has blown. When the transformer is refused under energized conditions, it is possible the fuse would be closed in on the system's maximum fault current. This is always of concern, and any transformer showing the slightest evidence of failure could be dangerous.

To Remove Fuse

1. Lift the weather cover and hold in position with locking support bracket.
2. Relieve any pressure in the tank using the pressure relief device.

---

[1] Bay-O-Net is a trademark of the RTE Corporation

3. Attach universal hot line tool, or hook stick to fuse handle eye – stand to one side – unlock handle.

4. Push down and rotate the handle 90° clockwise in the tube. The 90° rotation of the fuse holder breaks any adhesion between the seal gasket and the outer tube assembly.

5. Pull the fuse holder out six inches. This opens the primary circuit. Wait a few seconds for oil to drain into the tank.

DANGER: **IF ANY ARCING, RUMBLING, OR OTHER UNUSUAL NOISE IS HEARD, CURRENT IN EXCESS OF THE BAYONET'S LOADBREAK RATING IS LIKELY PRESENT. SLAM HOME THE BAYONET, LATCH AND DE-ENERGIZE FROM A REMOTE LOCATION.**

6. The inner fuse holder assembly can now be removed without dripping excess oil. The total length of the inner fuse holder assembly, including fuse element cartridge, is fourteen inches.

To Replace Fuse

Instructions for replacing the fuse on the fuse holder are packed with each replacement fuse or may be obtained from the fuse manufacturer.

To Reinstall Fuse Holder

1. Attach the handle eye of the inner fuse holder assembly to the hot stick.

2. Place it into the outer assembly and slam home.

3. When the inner fuse holder assembly is inserted as far as possible, push down and rotate the locking handle, hooking it over the shoulder of the outer tube assembly. When the handle is in the locked position, make sure the cover is seated against the shoulder of the outer tube assembly.

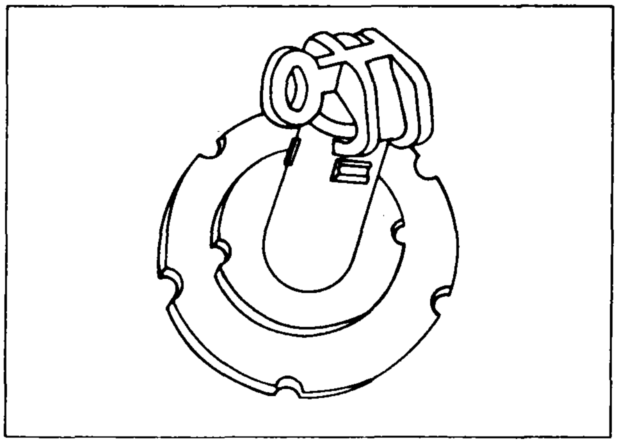

Fig. 5 *Bayonet Oil Fuse*

Internal Partial Range Current-Limiting Fuse

The partial range current-limiting fuse is used in series with an expulsion fuse to provide full range protection. The partial range fuse is designed to clear high current faults and the expulsion link to clear low current faults. These fuses are located under oil. Either internal expulsion fuses or bayonet[1] fuses are available as the series expulsion fuse.

High Voltage Switches

CAUTION: **ALWAYS ASSUME THAT TERMINALS ARE ENERGIZED UNLESS CHECKED AND GROUNDED. DO NOT RELY ON FUSE REMOVAL, SWITCH POSITION INDICATORS, OR OTHER VISUAL INDICATORS. CONTACT WITH AN UNGROUNDED TERMINAL MAY RESULT IN ELECTRICAL SHOCK OR BURNS.**

EFD Switch

The Westinghouse type EFD loadbreak (single-phase switching) air switch is available for either loop feed (three pole) or radial feed (single pole) application on live front transformers. A current-limiting fuse or a solid blade can be provided in the transformer connecting pole. The switch contacts are opened by drawing out the insulated switch pole so that they are completely free of the switch housing, leaving a visible disconnect. The switch poles should be drawn out or inserted quickly and uniformly with an ordinary hook stick. A schematic diagram decal is mounted on the front of the switch. The current-limiting fuse is replaced by removing the four nylon screws in the switch pole to expose the fuse.

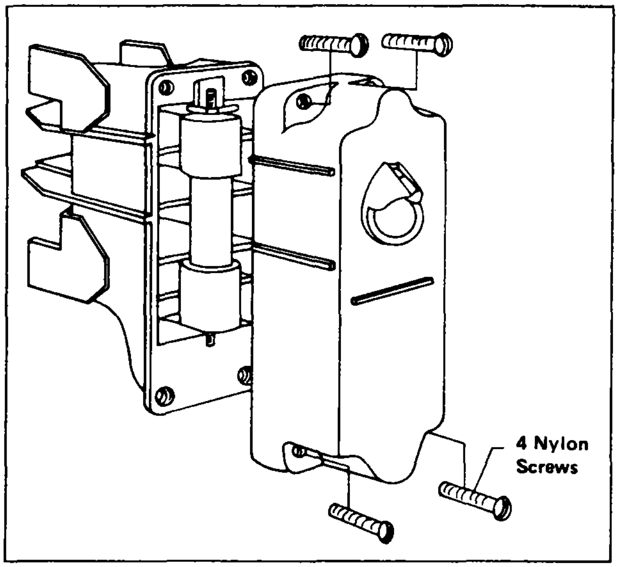

Fig. 6 *EFD Switch*

LBOR Switch

The Westinghouse type LBOR switch is an internal rotary three-pole loadbreak oil switch available for either loop feed or radial connection. For radial operation, a single two-position switch is supplied. Two two-position switches are provided for loop operation. The operating handles, which can be rotated with a hook stick or hot line tool, are located in the high voltage compartment with a position indicator showing the "closed" and "open" positions.

Circuit connections are shown on the transformer nameplate.

Tap Changers
(De-energized operation only)

The tap changer provides a means of changing the voltage ratio of a transformer. It can only be operated with the transformer de-energized. The tap changer operating handle is generally located in

---

[1] Bay-O-Net is a trademark of the RTE Corporation

the upper left-hand corner of the high voltage compartment. To change taps proceed as follows:

1. De-energize the transformer.

CAUTION: **THE TAP CHANGER MUST NOT BE OPERATED WHILE THE TRANSFORMER IS ENERGIZED. TO DO SO COULD RESULT IN SERIOUS PERSONAL INJURY AND DAMAGE TO PROPERTY.**

2. After de-energizing the transformer, pull the tap changer handle out until the end of the handle shaft clears the tap changer dial plate.

3. Turn the handle to the desired tap position.

4. When the shaft is over the slot in the dial plate for the desired position, apply a slight inward force and rotate the shaft within the confines of that slot until the end of the shaft moves inward beyond the face of the dial plate. This inward movement insures proper contact engagement.

Some large-size units are furnished with a power-transformer tap changer drive which requires pulling of a locking pin and a full turn of the handle for each change in tap position.

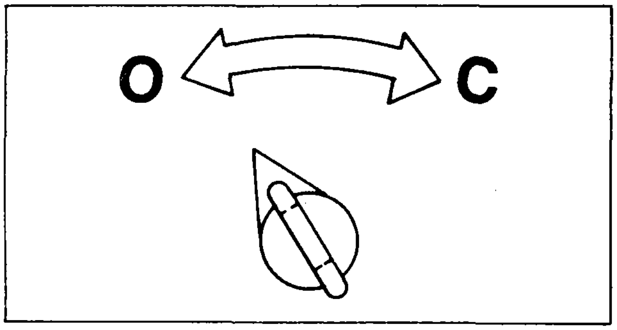

Fig. 7 *LBOR Switch*

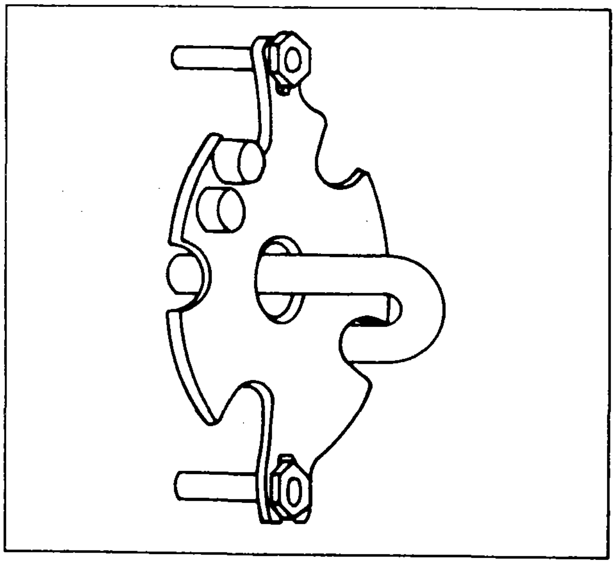

Fig. 8 *Tap Changer*

Dual Voltage Switch
(De-energized operation only)

The dual voltage switch permits the transformer to be operated on either of two primary voltages. The dual voltage switch handle is generally located in the upper left-hand corner of the high voltage compartment. Since considerable torque is required, a wrench should be used to rotate the handle.

To change voltages, proceed as follows:

1. De-energize transformer.

CAUTION: **THE DUAL VOLTAGE SWITCH MUST NOT BE OPERATED WHILE THE TRANSFORMER IS ENERGIZED. TO DO SO COULD RESULT IN SERIOUS PERSONAL INJURY AND DAMAGE TO PROPERTY.**

2. Back out the locking screw.

3. Rotate the switch handle in the direction of the arrows to the new position.

4. Reinsert locking screw to discourage unauthorized movement.

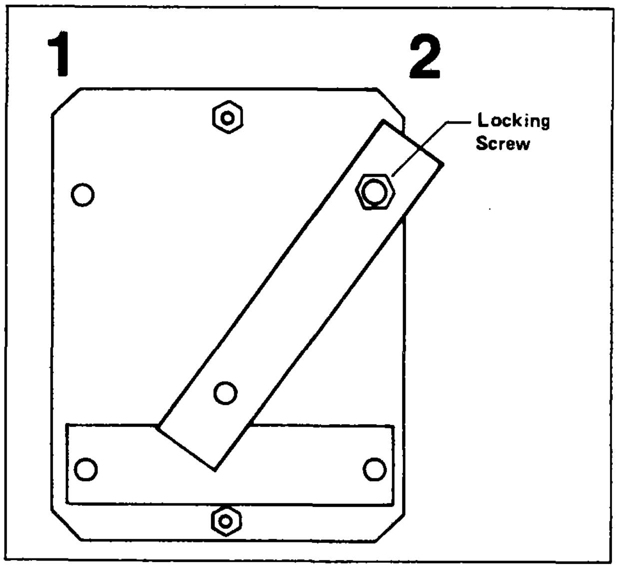

Fig. 9 *Dual Voltage Switch*

On a dual voltage transformer, position 1 is the low or multiple connected position while position 2 is the high or series connected position. On delta/wye rated transformers position 1 is the delta connected position and position 2 is the wye connected position.

CAUTION: **TRANSFORMERS SUPPLIED WITH REMOVABLE FUSES MAY REQUIRE REPLACEMENT OF FUSES WITH THOSE OF THE PROPER RATING WHEN CHANGING VOLTAGE POSITIONS. USE OF AN IMPROPERLY RATED FUSE MAY CAUSE VIOLENT FUSE FAILURE RESULTING IN DANGER TO LIFE AND DAMAGE TO PROPERTY.**

McGraw Edison Arc Strangler[2] and Switch

Transformers may be equipped with either radial or loop feed arc strangler[2] and switches mounted in the high voltage compartment. The fuses are current limiting fuses. The arc strangler[2] must be cocked before closing a switch or fuse assembly. Follow the McGraw Edison instructions for operating these devices which provide the loadbreak function using either fuses or blades.

---

[2] Arc strangler is a trademark of the McGraw Edison Company

S and C Pad-Mounted Gear

When S and C air switches or fused disconnects are used, follow the manufacturer's instructions for operating this equipment. When operated with the S and C loadbuster[3] tool, these disconnects function as a loadbreak switch.

CAUTION: **USE THE S AND C LOADBUSTER TOOL TO OPERATE THE SWITCH OR FUSED DISCONNECT. FAILURE TO DO SO COULD RESULT IN SERIOUS PERSONAL INJURY.**

Surge Arresters

Surge arresters are to be mounted in the high voltage compartment. Their function is to intercept and divert to ground various overvoltage transients (such as lightning surges) which occur on the distribution system.

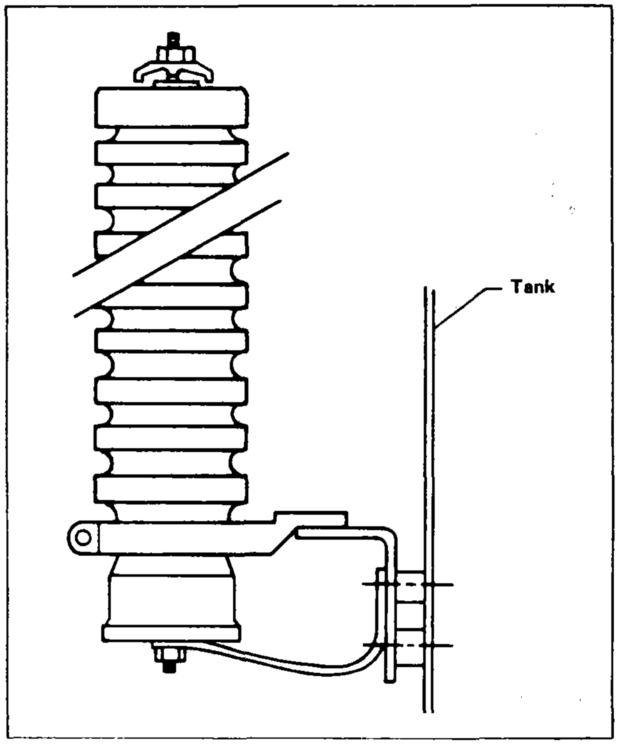

Fig. 10 *Surge Arrester Mounting*

LOW VOLTAGE ACCESSORIES

Low Voltage Oil-Immersed Circuit Breaker

CAUTION: **WITH THE SECONDARY CIRCUIT OPEN, THERE MAY BE SUFFICIENT COUPLING TO THE SECONDARY WINDINGS THAT PERCEPTIBLE SHOCK MAY BE OBTAINED FROM THE SECONDARY TERMINALS. GROUND THE OPEN SECONDARY TERMINALS BEFORE WORKING ON THE SECONDARY SERVICE.**

The three-pole secondary circuit breaker is designed to open the low voltage circuit on secondary faults or severe overloads. The breaker is located inside the tank under the oil. The handle is located in the low voltage compartment and may be operated with a hot line tool.

To open the low voltage circuit breaker manually, rotate the handle so that the pointer moves from the "C" (closed) to the "O" (open).

To close the breaker, rotate the handle past the open position to reset the breaker, then back through the open position to the closed position.

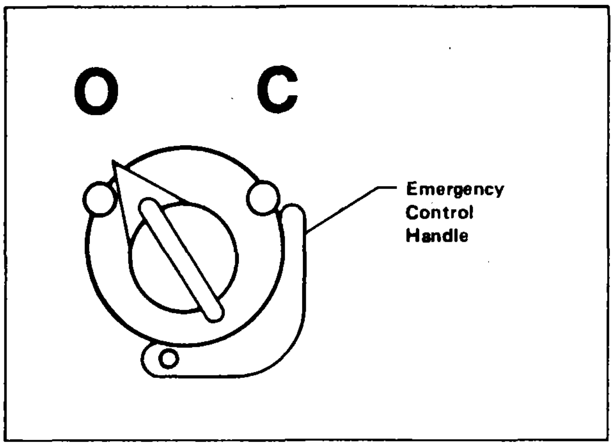

Fig. 11 *Oil Breaker Operator*

The breaker will reopen if a fault or excessive overload exists even though the handle may be held in the closed position.

Following a circuit breaker tripout due to an overload condition, the transformer oil may not have had time to cool sufficiently to allow the breaker latch to be reset, making it impossible to reclose the breaker immediately.

An emergency control handle is provided to recalibrate the breaker to a higher trip temperature. The emergency trip setting of the breaker should be used only when absolutely necessary and for as short a duration as possible because its use may result in a subsequent reduction in transformer life.

The breaker is recalibrated to the emergency position by removing the meter seal and rotating the emergency control handle approximately one-quarter turn down and away from the breaker operating handle. It is recommended that a new seal be applied to the handle when it is returned to the normal position after an emergency operation to avoid inadvertent operation of the emergency control.

Thermometer

A thermometer is available to indicate the top liquid temperature in the tank. The temperature sensitive element is mounted in a leak-proof well, permitting removal of the thermometer without lowering the liquid level. The device is furnished with an additional red pointer to show the highest temperature attained since last reset.

Liquid Level Gauge

A liquid level gauge is available located in the low voltage compartment, to indicate the variation from the 25°C oil level.

Pressure-Vacuum Gauge

A pressure gauge is available located in the low voltage compartment above the bushings in the air space. The gauge indicates whether the gas space in the tank is under positive or negative pressure.

---

[3] Loadbuster is a trademark of the S and C Electric Company

Pressure Relief Device

The automatic pressure relief device relieves excessive internal tank pressure and reseals at a lower positive pressure.

Molded Case Breakers

Westinghouse molded case breakers, when provided are located in the low voltage compartment. Contact the nearest Westinghouse Sales Office for data regarding this equipment.

Metering

Current transformers, potential transformers, kilowatt-hour meters or provisions for these items are mounted in or on the low voltage compartment when supplied.

APPLICATION LIMITATIONS

The transformers described herein are designed for the application conditions normally encountered on electric utility power distribution systems. As such they are suitable for use under the "usual service conditions" described in ANSI C57.12.00 (General Requirements for Liquid-Immersed Distribution, Power and Regulating Transformers). All other conditions are considered unusual service and should be avoided unless specific factory approval is obtained.

C. E. FI

3.4 JUNCTION BOXES

Equipment Number	Description	Maintenance Section	P&ID Dwg. Number
CFS 0003A	Collector Field Interface Cabinet	3.4.1	
CFS 0003B	Collector Field Interface Cabinet	3.4.1	

3.5 SWITCHGEAR

Equipment Number	Description	Maintenance Section	P&ID Dwg. Number
CFS 0002	Heliostat Interface Load Interrupter Switchgear	3.5.1	

3.5.1 Heliostat Interface Load Interrupter Switchgear

3.5.1.1 Identification

Tag Number	Description
CFS 0002	Heliostat Interface Load Interrupter Switchgear

3.5.1.2 Description

Manufacturer:	Powell Electrical Mfg. Co. 7555 West 10th Ave. Lakewood, CO 80215
Type:	5KV, 600A, 3P, Type SE-100S Load Break Switches by GE, and Model 2E206 Thermostat by Dayton

3.5.1.3 Vendor

Powell Electrical Mfg. Co.

3.5.1.4 Procurement Specification

Stearns-Roger Spec F233.3 (DOE Spec 40E500-3S)

3.5.1.5 Operation/Maintenance

See attached Powell Electrical Mfg. Co., instruction manual

INSTRUCTIONS AND
RECOMMENDED PARTS
FOR MAINTENANCE

GEI -88767E
Supersedes GEI-88767D

[illegible]

[illegible] C2 1700 AUG 23'80

SR No. E233.3 File No. 007

Load Break Switch

SE-100E
SE-100M
SE-100S✓

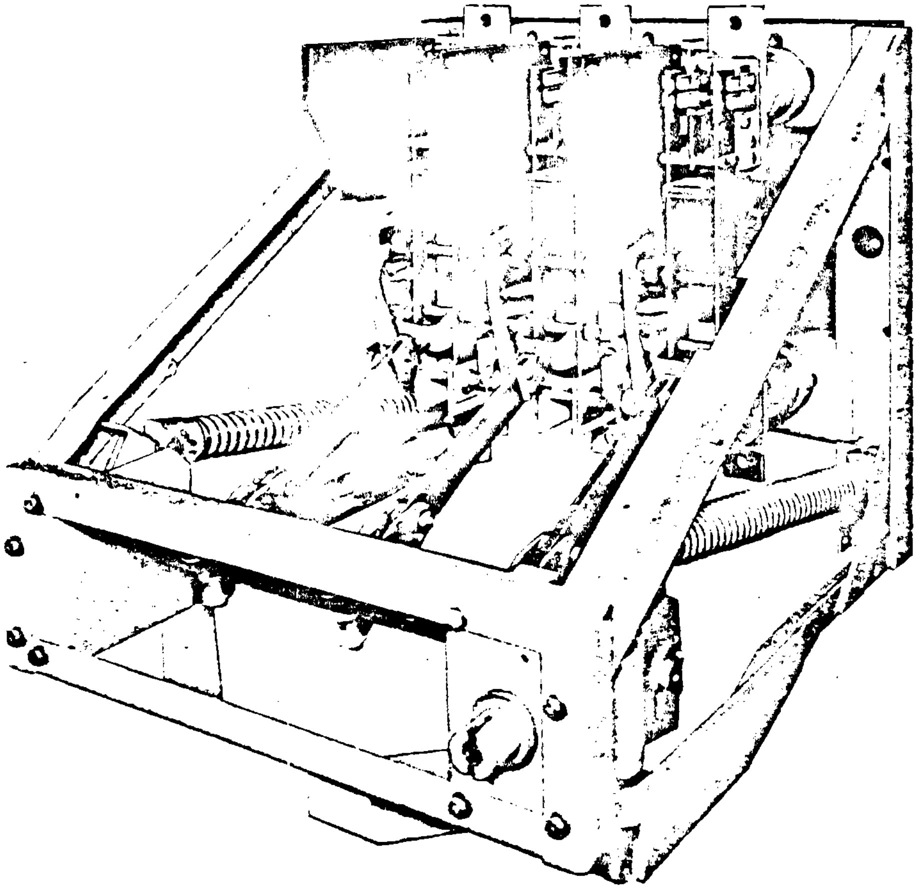

SWITCHGEAR PRODUCTS DEPARTMENT

GENERAL ELECTRIC

PHILADELPHIA, PA.

3.5.1-2

CONTENTS

Introduction 1

Ratings 1

Receiving, Handling and Storage. 2

Installation 3

Description of Operation

    SE-100E & SE-100S 4

    SE-100M 11

Adjustments

    SE-100E & SE-100S 4

    SE-100M 12

Final Inspection 13

Renewal Parts. .15

Lubrication Chart. 16

Schematic Wiring Diagram 16

Figure 1 - 8035016

Figure 2 - 8037271

Figure 3 - 8035232

Figure 4 - 8035037

Figure 5 - 8035014

Figure 6 - 8035015

Figure 7 - 8035035

Figure 8 - 8035033

Figure 9 - 8035032

Figure 10- 8037272

INSTRUCTION MANUALS
FOR
STEARNS ROGERS ENG. CORP.
OUTDOOR PRIMARY SWITCHING
CENTER, 5kv, 3 PHASE,
3W, 60Hz
BUILT BY
POWELL ELECTRICAL MFG. CO.
1980

SO# 61611

PO# 400 1C 2700

C. E. FILE

Stearns-Roger
C21700 JUL 01'80
MH
S-R No. F233.3 File No. 7

FINAL JUL 0 1 1980

☑ REVIEWED/NO COMMENTS
☐ REVIEWED/SEE COMMENTS
☐ REVISE PER COMMENTS & RESUBMIT FOR REVIEW
☐ SEE LETTER OF TRANSMITTAL

ENG. DEPT BY ____ DATE AUG 1 3 1980

NEITHER REVIEW, COMMENTS NOR REVISING RELIEVES MANUFACTURER OR CONTRACTOR FROM RESPONSIBILITY FOR COMPLIANCE WITH SPECIFICATIONS OR WITH ALL OTHER CONTRACT REQUIREMENTS.

RETURN TO
Stearns-Roger
INCORPORATED
ON OR BEFORE

LOAD BREAK SWITCH

TYPE SE-100

INTRODUCTION

The type SE-100 Load Break Switch is manually or electrically operated, triple pole disconnecting switch with an integral interrupter that has capability of interrupting transformer magnetizing and load currents within its rating.

The SE-100S has a manually charged, spring stored energy operating mechanism capable of closing the switch against maximum rated short circuited current.

The SE-100E has an electrically charged, spring stored energy operating mechanism with the same closing capabilities as the SE-100S.

The SE-100M is a manually closed and opened switch with load break abilities as indicated on the nameplate.

Refer to the nameplate for complete ratings of any particular switch. Do not apply the switch for any duty where voltage or current levels are greater than those given on the nameplate. The chart below gives the ratings for the basic switches.

SE-100 Switch Ratings

	Nominal Voltage KV	Max. Design Voltage KV	BIL KV	Continuous Current Amps	Load Break Current Amps	Close & Latch Current Amps	Momentary Current KA
SE-100E SE-100S	4.8	5.5	60	600	600	40,000	40
	4.8	5.5	60	1200	1200	61,000	61
	13.8	15.5	95	600	600	40,000	40
	13.8	15.5	95	1200	600	61,000	61
SE-100M	4.8	5.5	60	600	400	400	40
	13.8	15.5	95	600	100	100	40

The switch is normally furnished with outside and interphase insulating barriers in a metal-enclosed housing for connection either directly to the incoming side of a power transformer, the primary bus, or to cables by the use of potheads. When applied with power fuses, the combination serves as a successful switching and fault protection device.

Operation of the switch is accomplished by manual rotation of a handle through an arc of 180°. The SE-100S switch has a positive closing and opening operation supplied from the stored energy of springs. The SE-100M handle must be operated manually with a full positive motion to assure proper closing and opening with the direct drive mechanism. The operating handle is often interlocked with other devices such as secondary circuit breakers in order to assure sequential operation.

The SE-100E switch is normally operated by energizing an integral electric motor that charges the springs for positive closing and opening similar to the handle of the SE-100S. The switch can be quickly converted from electrical to manual operation with a handle for normal maintenance or emergency use.

The interrupting ability of the switch is accomplished by the use of an arc chute type interrupter (5) Fig. 4 and an auxiliary blade (3). When the switch is opened the auxiliary blade contacts (2 & 3) are the last to part and will initiate an arc in the chute. The hot arc releases gases from the plastic chute in such volume that the arc is blown away from the rapidly moving auxiliary blade and cooled by contact with the large area of the chute sides. After the arc has been extinguished, the blade will continue to open producing a sufficient air gap to isolate the terminals.

RECEIVING, HANDLING, AND STORAGE

Receiving and Handling

Immediately upon receipt of the switch, an examination should be made for loss or damage sustained in transit. If injury or rough handling is evident, a damage claim should be filed immediately with the transportation company and the nearest General Electric Apparatus Sales Office should be notified.

Although damage due to handling is minimized because of the metal enclosure, it is expected that due care will be exercised in the unpacking and installation of the switch unit so that no damage will occur from careless or rough handling, or from exposure to moisture or dirt. Care should be exercised to prevent tools from striking any part of the housing or switch itesl f.

Loose parts associated with the switch are always included in the same crate. Check all parts against the packing list to be sure that no parts have been overlooked.

Storage

It is recommended that the switch be placed into service immediately in its permanent location. If this is not possible, the following precautions should be taken to insure proper storage conditions:

TABLE OF CONTENTS

I. SWITCHES - GENERAL ELECTIC
  A. Load Break Switch Type SE-100S

II. MISCELLANEOUS - DAYTON
  A. Thermostat Model 2E206

1. The switch should be stored in a warm dry location to protect the insulation parts from condensation.

2. The switch should be stored in a clean location free from corrosive gases or fumes. Particular care should be taken to protect the equipment from moisture and cement dust, as this combination has a very corrosive effect on many parts.

3. Machined parts of the operating mechanism should be coated with a heavy oil or grease to prevent rusting.

If the switch is stored for long periods of time, periodic inspections should be made to insure that corrosion of metallic parts or deterioration of insulation parts has not begun. Should the switch be stored under unfavorable conditions, steps should be taken to dry out or replace insulation parts before placing in service.

INSTALLATION

Mounting

The switch must be mounted in the housing by supporting at both the front and rear. Care should be taken not to distort the frame by mounting on unflat or out-of-square surfaces as twisting may cause misalignment of the contacts. If necessary, shims should be used to prevent twisting.

Connection

The connections on the 600 ampere switch may be made from above or below the insulator support. The 1200 ampere switch must have the upper connections above the upper insulator support and the lower connection below the hinge support insulator. Connection of bus bars to this terminal can easily be made using the provided terminal bolts. After connections to the switch have been made, the switch alignment should be checked as listed below.

When furnished as a complete housing, the connections directly to the switch have been made at the factory. On these units, connections are made using the provided potheads, cable terminal connectors, etc.

Switch Alignment

Prior to placing the switch in service the following adjustments and alignment checks should be made to insure proper operation.

1. Before operating the SE-100E or SE-100S switch with the normal spring load, a slow closing of the blades should be made to check alignment. The power springs should be blocked as described under Spring Blocking and the three poles of the switch operated slowly by the maintenance handle to assure freedom of motion and to check alignment. A slow closing operation can be made on the SE-100M switch with the normal operating handle.

2. Check all items listed under Adjustments before the switch is put in operation and during each period of maintenance.

DESCRIPTION OF OPERATION SE-100E AND SE-100S

On the SE-100E and SE-100S switches both the closing and opening operation is accomplished by the spring-charged mechanism (6) Fig. 1 located on the front of the switch assembly. The mechanism is manually or electrically charged but is completely disengaged from the operating handle as it begins to operate the switch. In this way the actual operation of the switch is independent of the operator.

When operating either switch manually, the handle should be rotated with a positive motion throughout its entire stroke.

Closing Operation

Closing the SE-100S switch, and the SE-100E switch set for manual operation, is accomplished by inserting the operating handle (1) Fig. 3 into the handle socket provided in the operating hub (7) Fig. 1 in the enclosure and rotating in a counterclokwise direction as far as possible (approximately 180 degrees).

After a few degrees of handle rotation, the mechanism will engage the primary spring (4) Fig. 1 located on the right side and compress it fully. Continued rotation of the handle will push the spring over the toggle position and it will start to discharge. A driving lug (5) Fig. 2 will engage the drive crank (3), which is directly connected to the main crank shaft (11) Fig. 2, just as the primary spring leaves the toggle position. When the main crank shaft has rotated a few degrees, the fully charged booster spring, located on the left side, (5) Fig. 1 will pass its toggle position and the full energy of both springs will close the switch with sufficient force to close and latch against the current rating on the nameplate.

During the closing operation the auxiliary blade will be held out of the chute until just before the arcing contacts (6) Fig. 7 are engaged, then it is released to enter the chute and latch into the arc chute contacts (2) Fig. 4. This sequence of operations will prevent prestrike in the interrupting area of the arc chute.

At any time during the operation, until the primary spring reaches its toggle position, the handle can be returned to its starting position and removed. The mechanism will completely reset to the starting position.

The SE-100E switch is normally electrically operated by energizing a motor (2) Fig. 10. An internal gear driving mechanism will charge the springs and operate the switch in the same manner as the mechanical handle drive.

When the closing switch contacts are made the start-stop relay (3) Fig. 10 will close contacts and energize the motor in the proper direction. At the same time a closing seal-in relay (4) assures a complete operation without hesitation and mades the closing of the SE-100E switch independent of the operator. During the closing operation an auxiliary switch (1) will open the motor circuit and arrange a series of contacts for an opening operation. It will also de-energize the start-stop relay that will close a set of contacts in the motor circuit, shunting the field coils around the armature, there by effecting a dynamic brake. Refer to wiring diagram Fig. 12.

Opening Operation

To open the SE-100S switch, and the SE-100E switch set for manual operation, the operating handle is inserted into the handle socket and rotated in a clockwise direction as far as possible (approximately 180°).

After a few degrees of handle rotation, the mechanism will engage the primary spring (4) Fig. 1 and compress it fully. Continued handle rotation will push the spring over the toggle position and it will start to discharge. A driving lug (5) Fig. 2 will engage the drive crank (3) at the toggle position of the primary spring and will turn the main crank shaft (11). When the main crank shaft has rotated a few degrees past the primary spring toggle position, the spring will discharge, opening the switch, and charging the booster spring (5) Fig. 1 for the next closing operation.

The primary blade (11) Fig. 7 travel will cause the primary contacts (5) to part first and the arcing contacts (6) a few degrees later. The spring loaded auxiliary blade (3) Fig. 4 will remain latched to the contacts (2) inside the arc chute. At a predetermined position of the primary blades, the auxiliary blade will be released and will snap open at a high velocity.

As the arc chute contacts part, an arc is established between the auxiliary blade tip (3) Fig. 4 and the finger contacts (2). The hot arc releases gases from the plastic arc chute material dispersing the arc over a large area of the chute sides. The rapidly cooled arc is extinguished in the chute and the auxiliary blade will continue to travel until a sufficient air gap is achieved to withstand BIL voltages.

The SE-100E switch when opened electrically by the motor drive will have the same sequence of operations as when the manual handle is used. The electrical sequence is the same as described in the closing operation except seal-in relay (5) Fig. 10 is used.

ADJUSTMENTS SE-100E AND SE-100S

Spring Blocking

For most of the adjustments it will be necessary to operate the switch slowly with the maintenance handle. To do this the power springs must be blocked using the following procedure. Refer to Fig. 2.

1. Remove the rear bolt from position (1A) of the spring stop (2) located on the upper right angle frame. On 1200A switches it may be necessary to loosen the front bolts of the right hand barrier to have access to the bolts.
2. Rotate the stop until it is vertical, replace the bolt that had been removed in the lower location (1) and tighten.
3. The SE-100E mechanism must be put into the manual operation condition before operating with the manual handle. Disengage the electrical operator by sliding the yellow pawl block toward the center hub using a screw driver or other small tool Fig. 10. When the switch is closed the pawl will appear in the left hole, when open the right hole.
4. Using the normal operating handle rotate in a counterclockwise direction (direction of close) until the spring yoke on the right contacts the stop.
5. Remove operating handle and insert maintenance handle (2) Fig. 3 on main square shaft and screw the blocking pins (3) Fig. 3 in the left and right spring guide at (4) Fig. 2. The springs are now safely blocked and the maintenance handle will open and close the switch for adjusting purposes.

Upper (Closed) Mechanism Stop

The upper buffer stops (3) Fig. 5 located on either side of the mechanism at the ends of the main crank shaft, must be adjusted to position the operating rod cranks when the switch is closed. Operate the switch to the fully closed position.

The operating rod must go over toggle approximately ¼" at the crank connection when the switch is closed. A simple means of measuring the correct toggle angle is to place a straight edge along the upper side of the operating rod and extend it until it is over the square main shaft (10) Fig. 6. The dimension from the straight edge to the closest corner of the square shaft should be 1/4" to 3/8".

If adjustment of the stop is necessary, remove the cotter pin holding the stop (3) Fig. 5 and move washers and metal shims from the front to the rear (or the reverse) until the proper toggle angle is obtained. Adjust the stops at both ends of the main shaft the same amount to keep them balanced.

Primary Wipe

The operating rod must fully close the switch primary blades to obtain the correct primary finger wipe.

With the switch in the closed position, pull the top of the primary blades to the front with your hands to remove connection clearances. There should be 1/64" to 1/32" clearance between the buffer (8) Fig. 7

and the primary blade buffer stop (1) Fig. 1. There should also be 3/16" to 1/4" between the edge of the primary blade and the front of the primary contact support.

Adjust the length of the rod by use of the adjusting nuts (6) Fig. 6 to obtain the 3/16" to 1/4" gap then adjust the buffer (8) Fig. 7 by adding or removing shims to get the 1/64" to 1/32" clearance.

Primary Gap

The primary gap should be measured with the primary blades in the normal position. A measurement should be made from the buffer stop or spacer (3) Fig. 9 to the primary finger (2). The same primary finger, the bottom finger, should be used on both 600A and 1200A switches. The dimension should be 11" plus or minus 3/8". If this dimension is not correct, the lower buffer stop (6) Fig. 5 should be adjusted in a similar manner to the adjustment on the upper stop. Move shims and washers from the top to the bottom of the stop (or the reverse) as required. Adjust the stops at both ends of the main shaft the same amount to keep them balanced.

Primary and Arcing Contact Alignment

Close the primary blades (12) Fig. 8 slowly by the use of the maintenance handle and note the engagement of the primary contacts (4), arcing contacts (6 & 8), and guide block (10). The blades should center around the guide block with some clearance on either side. They should also be centered in the primary and arcing contact fingers.

If the blades press hard against the sides of the guide block, loosen the (2) bolts (11) Fig. 8 holding the block. Again check the contact alignment. If the contacts are properly aligned, reposition the guide block and bolt securely.

If the contacts are not in alignment, loosen the bolts holding the top insulator and position the insulator to center the contacts. After securing the insulators, reposition the guide blocks and tighten the bolts.

Be certain the insulator is moved only in a horizontal direction. Vertical displacement may cause misalignment of the auxiliary blade contacts.

Arc Chute Alignment

The arc chute must be positioned to allow entry of the auxiliary blade; to latch, and finally, to release the auxiliary blade at the proper time.

With the operating springs blocked, turn the contact arm (12) Fig. 7 slowly closed and check the entry of the auxiliary blade (7) into the arc chute (1). The blade should enter smoothly and be in the center of the opening. If the blade scrapes heavily on the sides of the chute, loosen the (2) bolts at the top (2) Fig. 7 and the (2) bolts

(10) Fig. 7 at the bottom of the chute. Position the chute so that the blade will travel the full length without binding or heavy scraping, and tighten the bolts.

A dimension of 1-1/6" should be maintained from the rear edge of the arc chute to the front edge of the primary finger contact support at all times when moving or re-aligning the chute. Refer to Fig. 7. The auxiliary blade contacts (2) Fig. 4 inside the chute should be properly positioned to latch the auxiliary blade when this dimension is maintained.

The auxiliary blade must be released by the contacts when the primary blade has been opened to a predetermined gap. With the operating springs blocked, open the primary contacts and slowly move the primary blade until the auxiliary blade is released. At the point of release the gap from the lower edge of the primary finger (the bottom finger (2) Fig. 9 to the buffer stop or spacer (3) should be 4-7/8" to 5-3/8" on the 4.8KV and 7-1/8" to 7-3/4" on the 13.2 KV switch. If the gap is not correct the vertical location of the chute must be changed. For gaps greater than the above range, the chute must be lowered, for gaps that are less the chute must be raised. To adjust the chute, remove the upper and lower mounting bolts (2 & 10) Fig. 7. Move shims (3) from the bottom to the top of the support to decrease the gap. To increase the gap, move some of the top shims to the bottom support.

When the release gap is properly set, check again the dimension from the back edge of the chute to the primary contact finger support and the alignment of the auxiliary blade in the chute opening.

Auxiliary Blade Release

The auxiliary blade release hook (14) Fig. 7 should be adjusted to hold the blade out of the arc chute until a predetermined position in the closing operation.

Close the switch slowly with the maintenance handle and note the position of the primary blades when the auxiliary blade is released by the hook. The hook should be adjusted by setting the camming screw (8) Fig. 4 to release the auxiliary blade within the range of 1/2" before Primary contacts touch. After adjustment is made the lock nut (9) Fig. 4 should be tightened.

Primary Contact Pressure

The primary finger pressure has been adjusted at the factory to be 12 pounds per contact on the 600A switch and 24 pounds per contact on the 1200A. This can be measured with a pull scale exerting a pressure against the contact surface. The contact pressure of each finger (5) Fig. 7 should be measured individually. Increase or decrease the contact pressure by loosening or tightening the contact bolts (4) Fig. 7.

Arcing Finger Contact Pressure

The arcing finger contact pressure should be 12 pounds on all 600A and 16 pounds on all 1200A switches. This pressure can again be measured with a spring scale against the contact surface. Loosen or tighten the contact bolts (7) Fig. 8 as necessary.

Primary Blade Hinge Pressure

The correct hinge pressure is essential for proper operation of the switch. The hinge pressure is difficult to measure, but a required torque to move the primary blades can be easily measured and can be substituted for a pressure measurement. The break away torque of the hinge (the torque required to start the blades moving) should be between 60 pound-inches to 90 pound-inches on 600A and 85 pound-inches to 110 pound-inches on 1200A switches. This can be measured by pulling at the buffer stop or spacer (1) Fig. 1 on the primary blade with a spring scale without the primary contacts, arcing contacts, and auxiliary blade contacts engaged. The scale reading should be 5½ to 8¼ # on 600A and 8 to 10 # on 1200A switches. If adjustment is necessary, remove a cotter pin from either side of the hinge pin (16) Fig. 7 and tighten or loosen the nut as required. Move the nut in increments of one sixth of a turn to assure line-up of cotter pin hole and slot in the nut.

Control Power Check SE-100E

After the switch has been opened and closed several times with the maintenance closing handle and all adjustments have been checked as described, the operating voltage should be checked at the motor terminal board. For electrical operation of the mechanism, the control power may be either an alternating or direct current source. The nominal range for the closing and opening voltages are given on the motor nameplate. The following ranges are standard.

Nominal Voltage	Closing and Opening Voltage Range
125V d-c	90 - 130V d-c
250V d-c	180 - 260V d-c
115V a-c	95 - 125V a-c
230V a-c	190 - 250V a-c

Auxiliary Switch

The auxiliary switch (1) Fig. 10 is mounted in the mechanism area and is operated by several links from the main shaft. The switch consists of "a" contacts that are open when the SE-100E switch is open and "b" contacts that are open when the SE-100E switch is closed. The contacts are used for relay operation and setting up the motor circuits for close and open operations. Several "a" and "b" contacts are available for special applications by the customer.

LUBRICATION

In order to maintain reliable operation, it is important that all parts of the mechanism be properly lubricated at all times. All bearings and other parts of the mechanism subjected to wear have been properly lubricated, during assembly at the factory, using the finest grades of lubricants available. However, even the finest oils and greases have a tendency to oxidize with age, as evidenced by hardening and darkening in color. Elimination of the hardened lubricant is essential for the proper operation of the switch. Also frequent operation of the device causes the lubricant to be forced out from between the bearing surfaces. A simple lubrication will often clear up minor disturbances which might be mistaken for more serious trouble.

A definite lubrication schedule should be set up taking into consideration the frequency of operation of the switch and local conditions. Until such a schedule is worked out, the switch should be lubricated at each periodic inspection and also whenever it is overhauled, in accordance with the lubrication chart, Fig. (11). It is also recommended that the device be operated at regular intervals to insure the user that the equipment is operating freely.

The lubrication chart, Fig. (11) is divided into two methods of lubrication. The first method outlines the maintenance lubrication which should be performed at the time of periodic maintenance, and requires no disassembly. The second method outlines a lubrication procedure similar to that performed on the device at the factory, but should be used only in case of a general overhaul or disassembly for other reasons.

General Electric Lubricants D50H15 and D50H47 are available in 1/4# collapsible tubes. It is so packaged to insure cleanliness and to prevent oxidation.

Method of Cleaning Bearings

Whenever cleaning is required, the bearings should be placed in a container of clean petroleum solvent or similar cleaner. DO NOT USE CARBON TETRACHLORIDE. If the grease in the bearings has become badly oxidized, it may be necessary to use alcohol (type used for thinning shellac) to remove it. Ordinarily, by agitating the bearings in the cleaning solution, and using a stiff brush to remove the solid particles, the bearings can be satisfactorily cleaned. Do not handle the bearings with bare hands as deposits from the skin onto the bearings are inductive to corrosion. If the bearings are touched, the contamination can be removed by washing in alcohol. After the bearings have been thoroughly cleaned, spin them in clean new light machine oil until the cleaner or solvent is entirely removed. Allow this oil to drain off and then repack them immediately with G-E lubricant D50H15 being sure all metal parts are greased.

NOTE: If it becomes necessary to clean the bearings in alcohol (shellac thinner), be sure the alcohol is perfectly clean, and do not allow the bearings to remain in the alcohol more than a few hours. If it is desirable to leave the bearings in the alcohol for a longer time, an inhibited alcohol such as is used for anit-freeze should be used. Even then the bearings should be removed from the alcohol within twenty-four hours. Esso Anti-Freeze and Du Pont Zerone are satisfactory for this purpose. Precautions against the toxic effects of the alcohol must be exercised by wearing rubber gloves and by using the alcohol in a well ventilated room; excessive exposure to the fumes is sometimes unpleasant to personnel. Washing the bearings in the light oil and draining should follow immediately, then apply the lubricant.

The hinge of the primary contact arm (16) Fig. 7 should be disassembled cleaned, and lubricated with G.E. D50H47 lubricant at general overhaul periods. A thin film of G.E. D50H47 should also be applied to the silvered area of the primary contact arm where it enters the primary fingers (5) Fig. 7, and the arcing contact blade where it enters the arcing contact fingers (6) Fig. 7.

NOTE: Do not grease auxiliary blade (7) Fig. 7.

DESCRIPTION OF OPERATION SE-100M

The SE-100M switch has a direct mechanical drive and the closing and opening energy is supplied by the operator.

When operating the switch, the handle should be rotated with a positive motion throughout its entire stroke.

Closing Operation

Closing the switch is accomplished by inserting the operating handle (1) Fig. 3 into the handle socket provided in the operating hub (7) Fig. 1 in the enclosure and rotating in a counterclockwise direction as far as possible (approximately 180°).

During the closing cycle the auxiliary blade (7) Fig. 7 will be held out of the arc chute until the primary blades (11) are almost closed. Just before the primary contacts (5) Fig. 7 touch, the auxiliary blade is released and will be the first part to close.

The mechanism has a direct gear drive to the main shaft of the switch and depends entirely on the operator to produce a smooth and positive motion to satisfactorily close.

Opening Operation

To open the switch insert the operating handle into the handle socket and rotate in a clockwise direction as far as possible (approximately 180 degrees).

The primary contacts (5 & 11) Fig. 7 will part first. When the primary blade gap is sufficient, the auxiliary blade (3) Fig. 4 will be released and will snap open at high velocity.

ADJUSTMENTS SE-100M

Upper (Closed) Mechanism Stop

Refer to Page 6.

Primary Wipe

When the switch is in the closed position, there should be no clearance between the primary blades and the primary finger support. The length of the operating rod should be adjusted so that there is noticeable force involved when the operating rod goes over center near the end of the closing stroke. When the switch is fully closed it should require between 30 and 40 pounds force to break the toggle. This force is applied at the bolt in the mechanism end of the operating rod and is applied downward perpendicular to the long axis of the operating rod. This force may be increased by lengthening the rod and decreased by shortening the rod.

Primary Gap

Refer to Page 7.

Primary Contact Alignment

Close the primary blades (12) Fig. 8 slowly by the use of the maintenance handle and note the engagement of the primary contacts (4), and guide block (10). The blades should center around the guide block without bearing heavily on either side. They should also be centered in the primary contact fingers.

If the blades press hard against the sides of the guide block, loosen the (2) bolts (11) Fig. 8 holding the block. Again check the contact alignment. If the contacts are properly aligned, reposition the guide block and bolt securely.

If the contacts are not in alignment, loosen the bolts holding the top insulator and position the insulator to center the contacts. After securing the insulators, reposition the guide blocks and tighten the bolts.

Be certain the insulator is moved only in a horizontal direction. Vertical displacement may cause misalignment of the auxiliary blade contacts.

Arc Chute Alignment

Refer to Page 7.

Auxiliary Blade Release

The SE-100M hook release should be adjusted to release the auxiliary blade when the primary contacts and blade are 1/2" to 1" apart. Be certain the auxiliary blade latches into the arcing contacts in the chute on each operation. The auxiliary blade is released before the primary contacts are closed so that it will close first and give a positive closing action even when the switch is inadvertantly operated slowly.

Primary Contact Pressure

Refer to Page 8.

Primary Blade Hinge Pressure

Refer to Page 9.

Lubrication

Refer to Page 10.

FINAL INSPECTION ALL SWITCHES

Before placing the SE-100 into service, a final inspection should be made consisting of the following:

1. Check all nuts, washers, bolts, cotter pins and terminal connections for tightness.
2. See that all bearing surfaces of the mechanism have been lubricated.
3. Operate the device slowly several times by hand and note that there is no binding or excessive friction.
4. See that any place where the surface of the paint has been damaged during installation is repainted immediately.
5. Replace all barriers, covers, and any other parts that may have been removed during installation.

Hi-Potential Test

If the device has been stored for a long period of time before installation, it is recommended that the insulation be checked before it is placed in service. A standard 60 cycle high potential test at 14,000 volts RMS for the 4.8KV switch and 27,000 volts RMS for the 13.2 KV switch will normally indicate whether the device is satisfactory for service. With the switch contacts in the fully opened position, apply the high potential to each terminal individually for one minute with all other terminals and the frame grounded. After high potential tests are made all organic insulating materials should be inspected for visible leakage current paths, and necessary action must be taken to replace insulation that may have been affected by moisture absorption.

The high potential test is also recommended for devices which have been removed from service and stored over an extended period of time under unfavorable atmospheric conditions.

NOTE: Before applying a hi-potential test make certain that the switch has been disconnected from both the source and load.

If the SE-100E secondary wiring is to be given a hi-potential test at 1500 volts, remove both of the motor leads from the terminal board. Failure to disconnect the motor from the circuit may cause damage to the winding insulation.

RECOMMENDED RENEWAL PARTS

DESCRIPTION	AMP RATING	QUAN. PER SWITCH	CAT. NO.		
			SE-100E	SE-100S	SE-100M
Primary Contact Finger	600	24	121A7458 P-2	121A7458 P-2	121A7458 P-2
Primary Contact Finger	1200	48	161A4219 P-2	161A4219 P-2	Not Avail.
Primary Contact Spring	600	12	456A806 P-1	456A806 P-1	456A806 P-1
Primary Contact Spring	1200	48	456A806 P-1	456A806 P-1	Not Avail.
Primary Contact Finger Retainer	600	12	105C9352 P-5	105C9352 P-5	105C9352 P-5
Primary Contact Finger Retainer	1200	24	105C9352 P-5	105C9352 P-5	Not Avail.
Primary Contact Blade	600	6	105C9365 P-3	105C9365 P-3	105C9365 P-3
Primary Contact Blade	1200	3	105C9366 P-13	105C9366 P-13	Not Avail.
Arcing Contact Finger	600	6	105C9360 P-1	105C9360 P-1	Not Req.
Arcing Contact Finger	1200	6	105C9360 G-2	105C9360 G-2	Not Req.
Arcing Contact Spring	All	6	161A5829 P-1	161A5829 P-1	Not Req.
Arcing Contact Blade	600	3	105C9366 P-4	105C9366 P-4	Not Req.
Arcing Contact Blade	1200	3	105C9366 G-1	105C9366 G-1	Not Req.
Arc Chute Assembly 4.8KV	600	3	105C9350 G-1	105C9350 G-1	105C9350 G-2
Arc Chute Assembly 4.8KV	1200	3	105C9350 G-1	105C9350 G-1	Not Avail.
Arc Chute Assembly 13.2KV	All	3	105C9350 G-2	105C9350 G-2	105C9350 G-2
Auxiliary Blade 4.8KV	All	3	114C5395 G-2	114C5395 G-2	114C5318 G-9
Auxiliary Blade 13.2KV	All	3	114C5395 G-1	114C5395 G-1	114C5318 G-9
Motor 115V-ac - 125V-dc	All	1	105C9393 P-5	Not Req.	Not Req.
Motor 230V-ac - 250V-dc	All	1	105C9393 P-6	Not Req.	Not Req.
Relay 115V-ac	All	3	137A7575 P-5	Not Req.	Not Req.
Relay 125V-dc	All	3	137A7575 P-1	Not Req.	Not Req.
Relay 230V-ac	All	3	137A7575 P-2	Not Req.	Not Req.
Relay 250V-dc	All	3	137A7575 P-3	Not Req.	Not Req.
Auxiliary Switch	All	1	137A9192 G-7	Not Req.	Not Req.
Operating Rod	600	3	114C5394 G-1	114C5394 G-1	114C5394 G-1
Operating Rod	1200	3	114C5394 G-2	114C5394 G-2	Not Avail.

PART	LUBRICATION AT NORMAL MAINTENANCE PERIOD	ALTERNATE LUBRICATION REQUIRE DISASSEMBLY
Sleeve Bearings (Operating rod ends Aux. Blade Hinge, Release Hook, etc.)	Light application of SAE 20-30 oil	Clean bearings then apply D50H15 grease.
Roller & Needle Bearings	Light application of SAE 20-30 oil	Clean bearings then apply D50H15 grease.
Worm and Wheel Miter Gears	Apply D50H15 grease	Wipe clean and apply D50H15 grease.
Motor	Light application of SAE 20-30 oil at rear oil hole only	Light application of SAE 20-30 oil at rear oil hole only

Fig. 11 LUBRICATION CHART

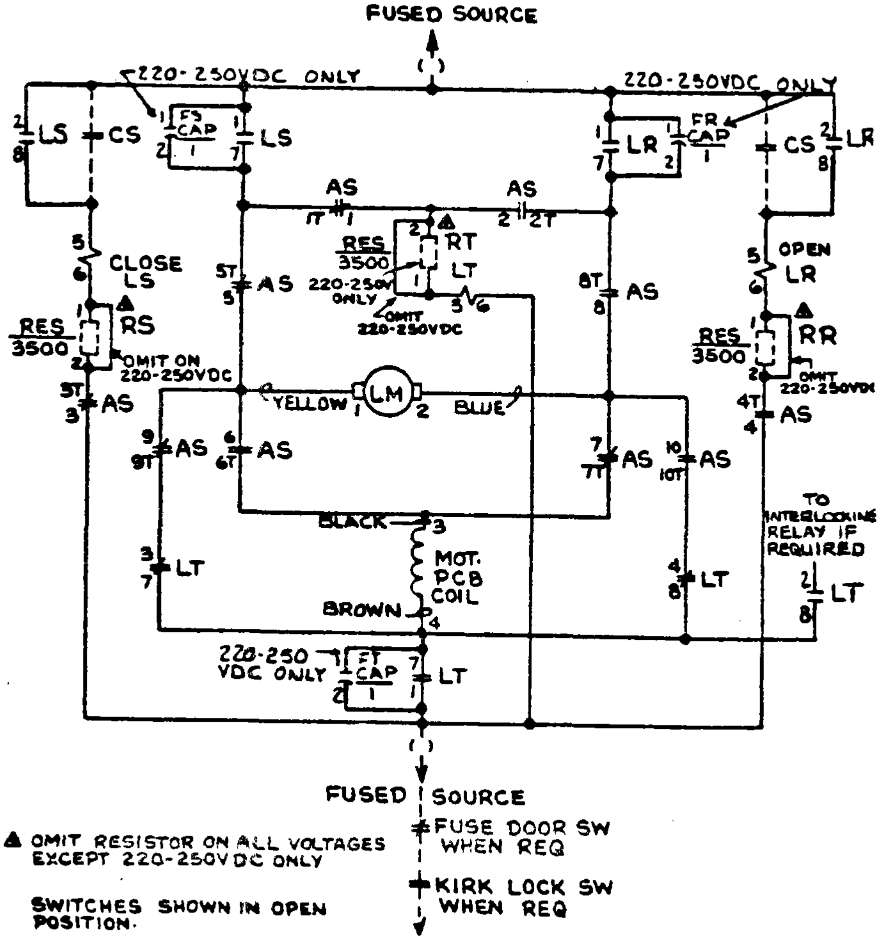

▲ OMIT RESISTOR ON ALL VOLTAGES EXCEPT 220-250VDC ONLY

SWITCHES SHOWN IN OPEN POSITION.

Fig. 12 (0227A1055) Schematic Wiring Diagram.

3.5.1-21

1. Primary Blade Stop
2. Primary Contact Fingers
3. Primary Contact Blade
4. Primary Spring
5. Booster Spring
6. Operating Mechanism
7. Operating Hub

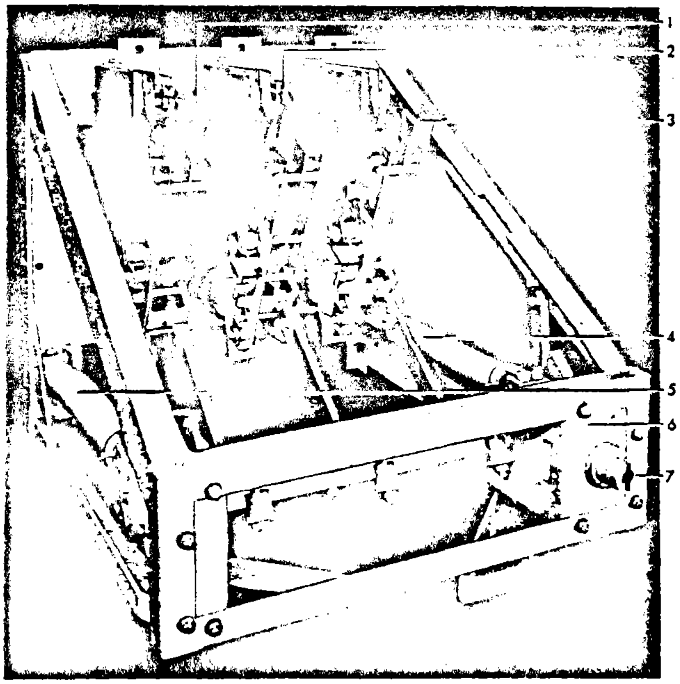

Fig. 1 SE-100S Switch Partially Open

1. Spring Stop Bolt

1A. Spring Stop Bolt

2. Spring Stop
3. Driving Crank
4. Hole for Spring Blocking Pin
5. Driving Lug
6. Buffer Rubber
7. Buffer Stop
8. Operating Rod
9. Operating Rod Crank
10. Operating Hub
11. Main Crank Shaft
12. Maintenance Handle

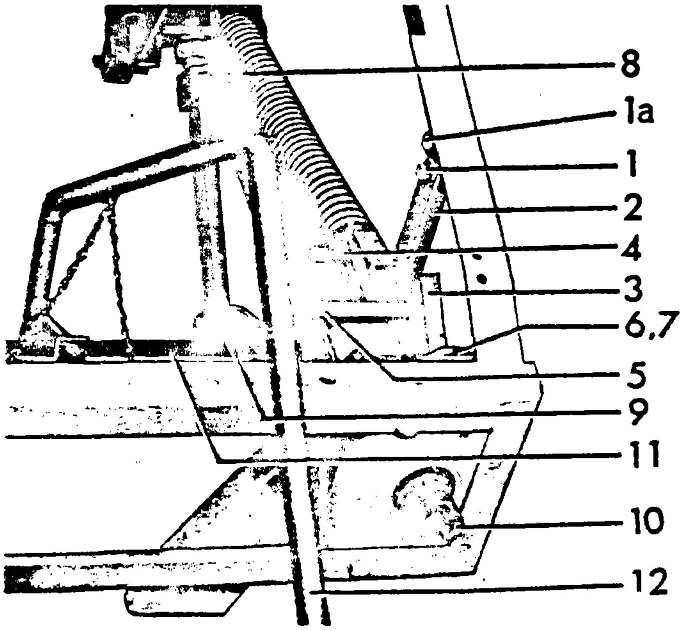

Fig. 2 Spring Drive Mechanism

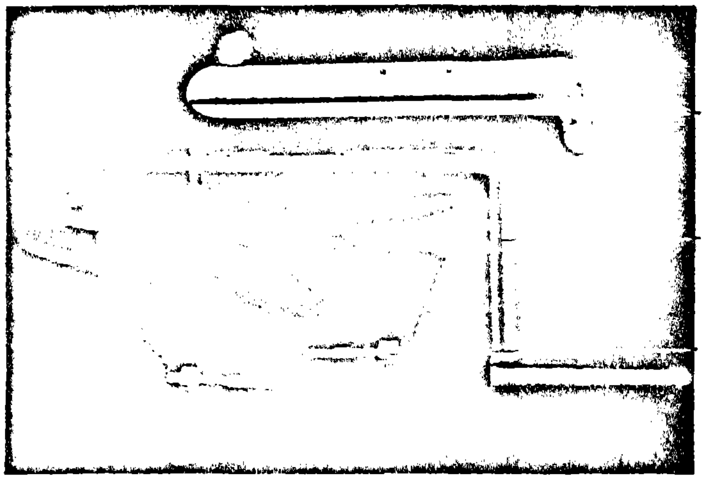

1. Operating Handle
2. Maintenance Handle
3. Spring Blocking Pin

Fig. 3 Operating and Maintenance Handles

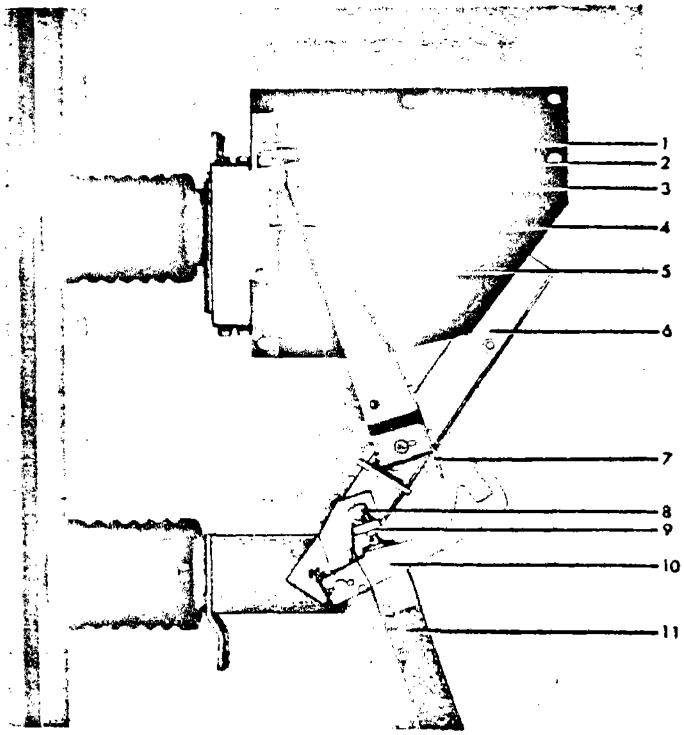

1. Blade Stop Block
2. Arc Chute Contacts
3. Auxiliary Blade
4. Spacer
5. Arc Chute Side
6. Primary Contact Blade
7. Auxiliary Blade Spring
8. Camming Screw
9. Lock Nut
10. Auxiliary Blade Release Hook
11. Operating Rod

Fig. 4 Unit Pole Opening

1. Collar
2. Buffer Rubber
3. Upper Buffer Stop
4. Booster Crank
5. Buffer Rubber
6. Lower Buffer Stop

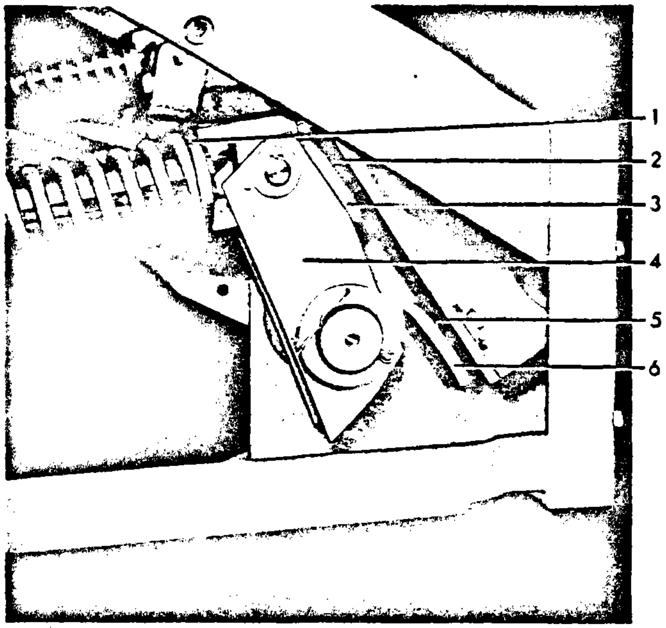

Fig. 5 Buffer Assembly

1. Auxiliary Blade Spring
2. Auxiliary Blade Release Hook
3. Spring Stop
4. Camming Screw
5. Lock Nut
6. Adjusting Nut
7. Release Hook Spring
8. Operating Rod
9. Operating Rod Crank
10. Main Crank Shaft

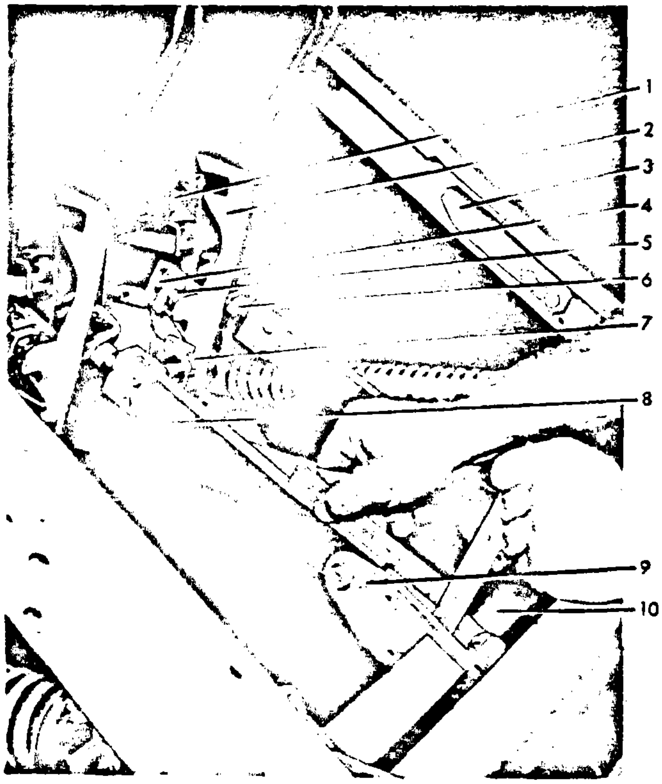

Fig. 6 Switch Blade Adjustments

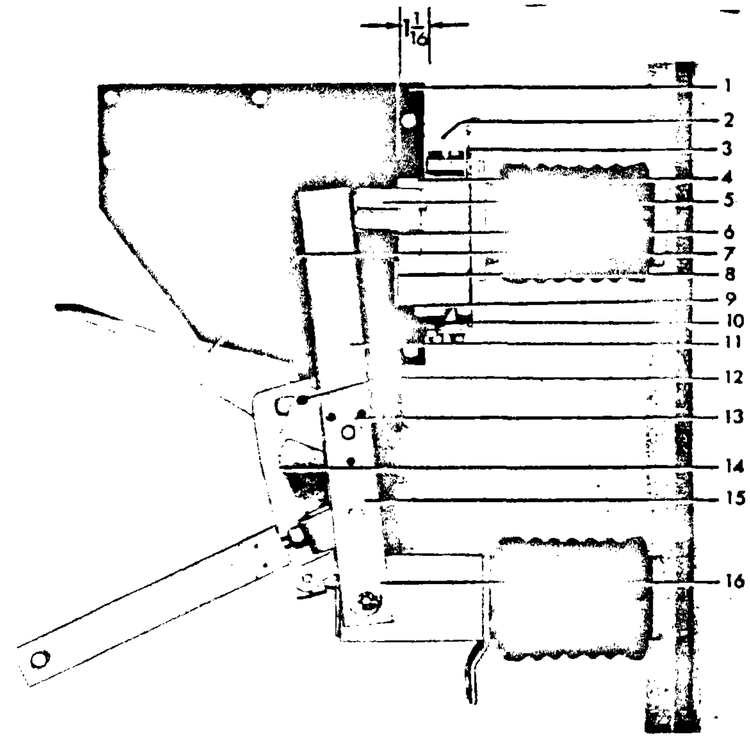

Fig. 7 Unit Pole Closing

1. Buffer Stop
2. Arc Chute Mounting Bolts
3. Shims
4. Contact Bolt
5. Primary Contact Fingers
6. Arcing Contact Fingers
7. Auxiliary Blade
8. Buffer Stop
9. Guide Block
10. Arc Chute Mounting Bolts
11. Primary Contact Blade
12. Auxiliary Contact Blade
13. Rivot Pin for Auxiliary Blade
14. Auxiliary Blade Release Hook
15. Operating Rod Clevis Pin
16. Hinge Pin

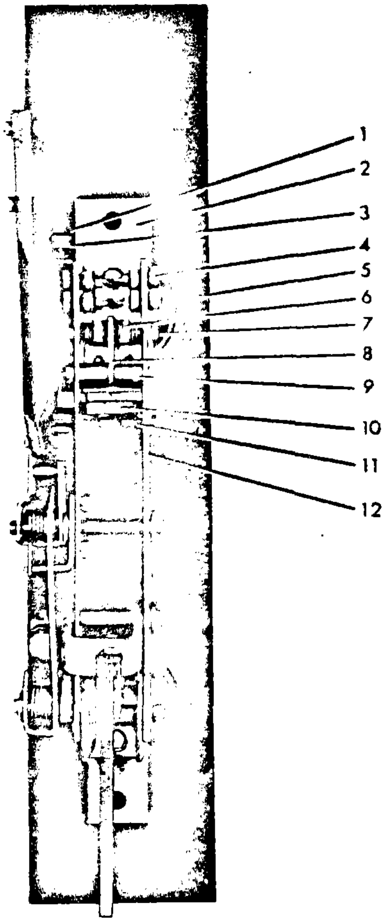

Fig. 8 Contact Arrangement

1. Arc Chute Mounting Bolts
2. Upper Terminal
3. Shims
4. Primary Contacts
5. Contact Bolts
6. Arcing Contact Fingers
7. Contact Bolt
8. Movable Arcing Contact
9. Tube Spacer
10. Guide Block
11. Buffer Block Bolts
12. Primary Contact Blades

1. **Arc Chute**
2. **Stationary Primary Contact**
3. **Primary Blade Stop**
4. **Primary Blade**

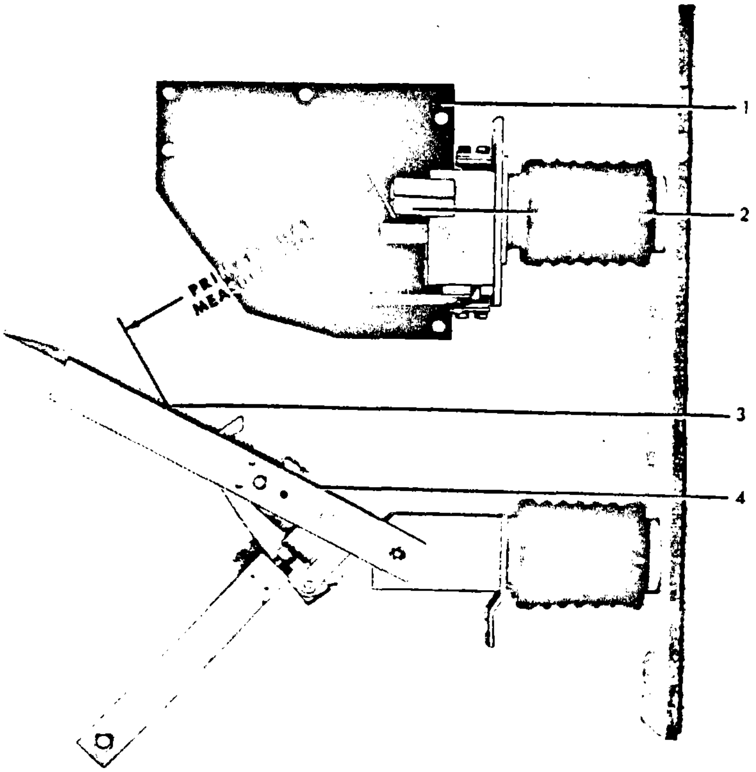

Fig. 9 Unit Pole Fully Open

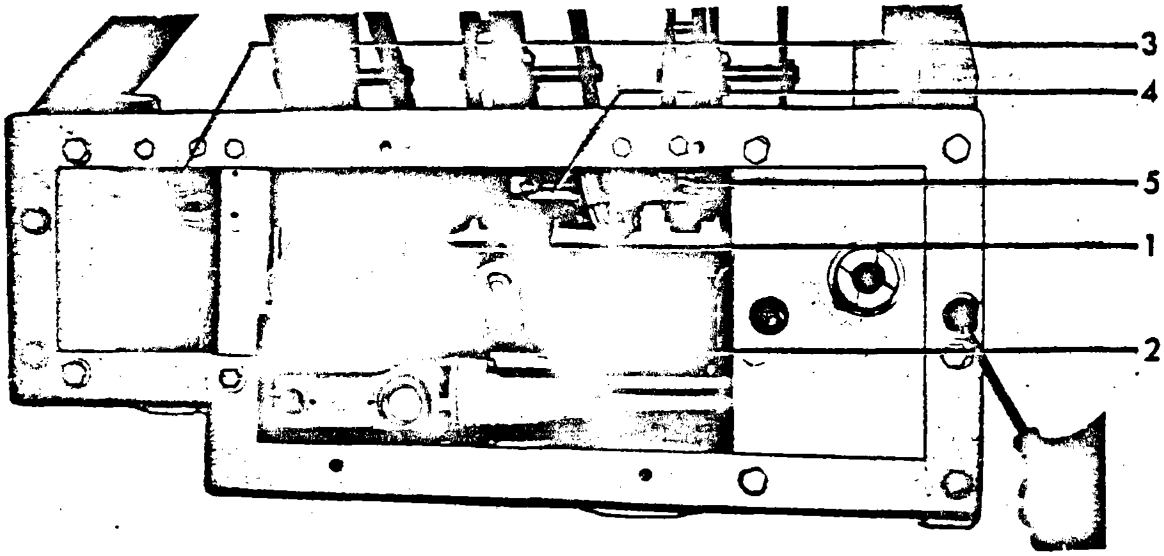

1. Auxiliary Switch
2. Motor
3. Start-Stop Relay
4. Close Relay
5. Open Relay

Fig. 10 Electrical Operator

GENERAL ELECTRIC INSTALLATION AND SERVICE ENGINEERING OFFICES

FIELD SERVICE OFFICE CODE KEY
• Mechanical & Nuclear Service
† Electrical & Electronic Service
‡ Marine Service
I Transportation

FOR YOUR LASTING SATISFACTION ... with the performance and availability of your General Electric equipment, GE provides this nationwide network of field service offices, serving utility, industrial, transportation and marine users. Qualified field engineers provide installation, start-up, employee training, engineering maintenance and other services, throughout the productive life of the equipment. For full information, call your nearest Installation & Service Engineering office...

ALABAMA
† Birmingham 35205 .... 2151 Highland Ave.
• † ‡ Mobile 36609 .... 1111 S. Beltline Highway

ALASKA
† Anchorage 99501 .... 115 Whitney Rd.

ARIZONA
• † Phoenix 85012 ...... 3550 N. Central Ave.
† Tucson 85716 .... 151 S. Tucson Blvd.

ARKANSAS
† North Little Rock 72119 ...... 120 Main St.

CALIFORNIA
• † I Los Angeles 90064 ...... 212 N. Vignes St.
† Palo Alto 94303 ..... 960 San Antonio Rd.
† Sacramento 95808 .... 2407 J St.
† San Diego 92103 .... 2560 First Ave.
• ‡ San Francisco 94119 .... 55 Hawthorne St.
• Vernon 90058 .... 3035 E. 46th St.

COLORADO
• † Denver 80206 .... 201 University Blvd.

CONNECTICUT
• † Meriden 06450 .... 1 Prestige Dr.

FLORIDA
† ‡ Jacksonville 32203 .... 4040 Woodcock Dr.
† ‡ Miami 33134 .... 4100 W. Flagler St.
• † ‡ Tampa 33606 .... 2106 S. Lois Ave.

GEORGIA
• † ‡ Atlanta 30309 ..... 1860 Peachtree Rd., NW
† ‡ Savannah 31405 .... 5002 Paulsen St.

HAWAII
• † ‡ Honolulu 96813 .... 440 Coral St.

ILLINOIS
• † ‡ I Chicago 60680 .... 840 S. Canal St.

INDIANA
† Evansville 47705 ... 2709 Washington Ave.
† Fort Wayne 46807 .... 3606 S. Calhoun St.
• † Indianapolis 46207 ... 3750 N. Meridian St.

IOWA
† Davenport 52805
... P.O. Box 630, 1039 State St., Bettendorf

KENTUCKY
† Louisville 40218 ...... 2300 Meadow Dr.

LOUISIANA
† Baton Rouge 70806 ..... 8312 Florida Blvd.
• † I New Orleans 70125 .... 4747 Earhart Blvd.
• † Shreveport 71104 ... 2620 Centenary Blvd.
† Monroe 71201 .... 1028 North 6th St.

MARYLAND
• † ‡ Baltimore 21201 .... 1 N. Charles St.

MASSACHUSETTS
• † ‡ Wellesley 02181 .... 1 Washington St.

MICHIGAN
• † ‡ Detroit 48202 .... 700 Antoinette St.
† Jackson 49201 .... 210 W. Franklin St.
† Saginaw 48607
.... 1008 Second National Bank Bldg.

MINNESOTA
† I Duluth 55802 .... 300 W. Superior St.
• † I Minneapolis 55416 ... 1500 Lilac Drive So.

MISSOURI
• † Kansas City 64199 .... 911 Main St.
• † St. Louis 63101 .... 1015 Locust St.

MONTANA
† Butte 59701 .... 103 N. Wyoming St.

NEBRASKA
• † Omaha 68102 .... 409 S. 17th St.

NEW JERSEY
• † Millburn 07041 .... 25 E. Willow St.

NEW YORK
† ‡ Albany 12205 .... 15 Computer Drive, West
• † ‡ Buffalo 14205 .... 625 Delaware Ave.
• † ‡ I New York 10022 ...... 641 Lexington Ave.
• Rochester 14604 .... 89 East Ave.
• † I Syracuse 13206 .... 3532 James St.

NORTH CAROLINA
• † ‡ Charlotte 28207 ...... 141 Providence Rd.
• Wilmington
Reigelwood 28456 .... P.O. Box 186

OHIO
• † Cincinnati 45206 ...... 2621 Victory Pkwy.
• † I Cleveland 44104 ...... 1000 Lakeside Ave.
† Columbus 43229 .... 1110 Morse Rd.
† ‡ Toledo 43606 .... 3125 Douglas Rd.
† Youngstown 44507 ..... 272 Indianola Ave.

OKLAHOMA
• † Oklahoma City 73106 ... 2000 Classen Blvd.
† Tulsa 74105 .. P.O. Box 7646, Southside Sta.

OREGON
† Eugene 97401 .... 1170 Pearl St.
• † ‡ Portland 97210 .... 2929 NW 29th Ave.

PENNSYLVANIA
• Allentown 18102 .... 1444 Hamilton St.
• † ‡ Philadelphia 19102 ... 3 Penn Center Plaza
• † Pittsburgh 15222 .... 300 6th Avenue Bldg.

SOUTH CAROLINA
† ‡ Columbia 29204 ..... 2700 Middleburg Dr.
† Greenville 29607 .. 41 No. Pleasantburg Dr.

TENNESSEE
• † Chattanooga 37411
.... 5800 Bldg, Eastgate Center
† Memphis 38130 .... 3385 Airways Blvd.

TEXAS
• † Amarillo 79101 .... 303 Polk St.
• † ‡ Beaumont 77704 .... 1385 Calder Ave.
• ‡ Corpus Christi 78401 .. 205 N. Chaparral St.
• † Dallas 75222 .... 8101 Stemmons Freeway
• † El Paso 79945 .... 215 N. Stanton
† Fort Worth 76102 ...... 408 W. Seventh St.
• † ‡ Houston 77027 ...... 4219 Richmond Ave.
† San Antonio 78204 .... 434 S. Main St.

UTAH
† Salt Lake City 84111 .. 431 S. Third East St.

VIRGINIA
• ‡ Newport News 23601 .... 311 Main St.
† ‡ Richmond 23230 .... 1508 Willow Lawn Dr.
† Roanoke 24015 .... 2018 Colonial Ave.

WASHINGTON
• † ‡ Seattle 98188
.... 112 Andover Park East, Tukwila
† Spokane 99202 .... E. 1805 Trent Ave.

WEST VIRGINIA
• † Charleston 25328 .. 306 MacCorkle Ave., SE

WISCONSIN
• Appleton 54911 .... 3003 West College Dr.
† ‡ Milwaukee 53202 ..... 615 E. Michigan St.

GENERAL ELECTRIC SERVICE SHOPS

WHEN YOU NEED SERVICE ... These GE Service Shops will repair, recondition, and rebuild your electric apparatus. The facilities are available day and night, seven days a week, for work in the shops or on your premises. Latest factory methods and genuine GE renewal parts are used to maintain performance of your equipment. For full information about these services, contact your nearest service shop or sales office.

ALABAMA
● • Birmingham 35211 .. 1500 Mims Ave., S. W.
● Mobile 36609 .... 721 Lakeside Dr.

ARIZONA
● (Phoenix) Glendale 85019 . 4911 W. Colter St.
● Phoenix 85019 ..... 3840 W. Clarendon St.
● Tucson 85713 .... 2942 So. Palo Verde Ave.

CALIFORNIA
● Los Angeles 90301 .... 6900 Stanford Ave.
● (Los Angeles) Anaheim 92805
.... 3601 E. LaPalma Ave.
• (Los Angeles) Inglewood 90301
.... 228 W. Florence Ave.
● Sacramento 95814 ...... 99 North 17th St.
● • (San Francisco) Oakland 94608
.... 1650 34th St.

COLORADO
● • Denver 80205 .... 3353 Larimer St.

CONNECTICUT
● • (Southington) Plantsville 06479
.... 370 Atwater St.

FLORIDA
● • Jacksonville 32203 .... 2020 W. Beaver St.
● (Miami) Hialeah 33010 ... 1062 East 28th St.
● • Tampa 33601 .... 19th & Grant Sts.

GEORGIA
● (Atlanta) Chamblee 30341
.... 5035 Peachtree Industrial-Blvd.
• Atlanta .... 2379 John Glenn Dr.

ILLINOIS
● • Chicago 60638 .... 6045 S. Nottingham Ave.

INDIANA
● Evansville 47711 ... 401 N. Congress Ave.
● Ft. Wayne 46803 ...... 1731 Edsall Ave.
● Hammond 46320 .... 1138 164th Place
● • Indianapolis 46222 ... 1740 W. Vermont St.

IOWA
● (Davenport) Bettendorf 52722 . 1025 State St.

KENTUCKY
● Louisville 40209 .... 3900 Crittenden Drive

LOUISIANA
● Baton Rouge 70814 ... 10955 North Dual St.
● • New Orleans 70114 ..... 1115 DeArmas St.

MARYLAND
● • Baltimore 21230 .... 920 E. Fort Ave.

MASSACHUSETTS
● • Δ (Boston) Medford 02155
.... 3960 Mystic Valley Pkwy.

MICHIGAN
● • Δ (Detroit) Riverview .... 18075 Krause Ave.
● Flint 48505 .... 1506 E. Carpenter Rd.

MINNESOTA
● Duluth 55807 ... 50th Ave. W & St.Louis Bay
● • Minneapolis 55430 .... 2025 49th Ave., N.

MISSOURI
● • Kansas City 64120 ..... 3525 Gardner Ave.
● • St. Louis 63110 .... 1115 East Rd.

NEW JERSEY
● New Brunswick 08902 ..... 3 Lawrence St.

NEW MEXICO
● Albuquerque 87109 ... 4420 McLeod Rd. NE

NEW YORK
● Albany 12205 .... 1097 Central Ave.
● • (Buffalo) Tonawanda 14150 .. 175 Milens Rd.
● (Long Island) Old Bethpage 11804
.... 183 Bethpage-Sweet Hollow Rd.
● (New York City) North Bergen, N. J. 07012
.... 6001 Tonnelle Ave.
• (New York City) Clifton, N. J. 07012
.... 9 Brighton Rd.
• Δ Schenectady 12305 .... 1 River Rd.
● Syracuse 13206 .... 1015 E. Hiawatha Blvd.

NORTH CAROLINA
● • Charlotte 28208 .... 2328 Thrift Rd.

OHIO
● Akron (Canton) 44720
.... 7900 Whipple Ave N. W.
● • Cincinnati 45202 .... 444 West 3rd St.
● • Δ Cleveland 44125 ...... 4477 East 49th St.
● Columbus 43229 .... 6650 Huntley Rd.
● • Toledo 43605 .... 405 Dearborn Ave.
● Youngstown 44507 ... 272 E. Indianola Ave.

OKLAHOMA
● Tulsa 74145 ...... 5220 S. 100th East Ave.

OREGON
● Eugene 97402 .... 570 Wilson St.
● • Portland 97210 ...... 2727 NW 29th Ave.

PENNSYLVANIA
● Allentown 18103 ...... 668 E. Highland St.
• (Delaware Valley) Cherry Hill, N.J., 08034
.... 1790 E. Marlton Pike
● Johnstown 15802 .... 841 Oak St.
● Philadelphia 19124 ... 1040 East Erie Ave.
● • (Pittsburgh) West Mifflin 15122
.... 4930 Buttermilk Hollow Rd.
● York 17403 .... 54 N. Harrison St.

SOUTH CAROLINA
● (Charleston) No. Charleston 29401
.... 2490 Debonair St.

TENNESSEE
● Knoxville 37914
.... 2621 Governor John Sevier Hwy.
● Memphis 38107 .... 708 North Main St.

TEXAS
● Beaumont 77705 ..... 1490 W. Cardinal Dr.
● Corpus Christi 78401 ...... 115 Waco St.
● • Dallas 75235 .... 3202 Manor Way
● Houston 77036 .... 5534 Harvey Wilson Dr.
• Houston 77036 .... 6916 Harwin Dr.
● Midland 79701 .... 704 S. Johnston St.

UTAH
● • Salt Lake City 84110 ... 301 S. 7th West St.

VIRGINIA
● • Richmond 23224 .... 1403 Ingram Ave.
● Roanoke 24013 ...... 1004 River Ave., SE

WASHINGTON
● • Seattle 98134 ..... 3422 First Ave., South
● Spokane 99211 .... E. 4323 Mission St.

WEST VIRGINIA
● • Charleston 25328 .. 306 MacCorkle Ave., SE

WISCONSIN
● (Appleton) Menasha 54910 .. 1725 Racine St.
● Milwaukee 53207 ... 235 W. Oklahoma Ave.

● Electrical/Mechanical Service Shop • Instrumentation Shop Δ Special Manufacturing Shop

INSTALLATION & OPERATING INSTRUCTIONS

TEMPERATURE CONTROLS

MODELS 2E206 & 2E207

FORM
551421

DAYTON ELECTRIC MANUFACTURING CO. CHICAGO 60648

JAN. 1977

APPLICATION

The single stage Model 2E206 and the two stage Model 2E207 thermostats incorporate single-pole double-throw switches for controlling automatic ventilation or heating in livestock barns, poultry houses, milk houses, brooder houses and other buildings. The 30 to 110° F. temperature range permits use for many space applications. Mounting may be by wiring conduit or to a flat surface with screws through holes provided in back of frame.

These thermostats are designed for operating or limit control applications. Where critical or high value products are to be maintained within a specific temperature differential, a single thermostat should not be applied to function as both an operating and a limit control. In these applications, a separate limit control with alarm contacts should be wired to indicate when the limit control operates.

FEATURES

- –Liquid-filled sensing element gives uniform control at all ambient temperatures.
- –Dependable single-pole, double-throw snap acting contacts in dust-tight enclosure.
- –Special close differential models available for critical requirements.
- –Special coiled element is attached to case and when thermostat is mounted with bulb pointed down it is protected from falling objects, such as straw, hay, dust, etc.

GENERAL DESCRIPTION

The enclosed switches are sealed against dust and other foreign material found in farm buildings. A compact helical temperature element, specially treated against corrosion, is firmly attached to the exterior of the case to allow maximum sensitivity to changes in air temperature. The liquid-filled sensing element provides accurate operation unaffected by barometric pressure changes or altitude.

SPECIFICATIONS

Model 2E206: One SPDT switch (one set of contacts opens on temperature rise as the other set closes simultaneously).

Model 2E207: Two SPDT switches, with one stage operating 3° F. higher than the other stage.

Range: 30° to 110° F. (140° F. maximum overrun temperature).

Differential: Approximately 3½° F. (Each switch has this differential on Model 2E207).

Temperature between stages: This difference is fixed; the low stage makes contact at the dial setting while the high stage makes contact approximately 3° F. above the dial setting.

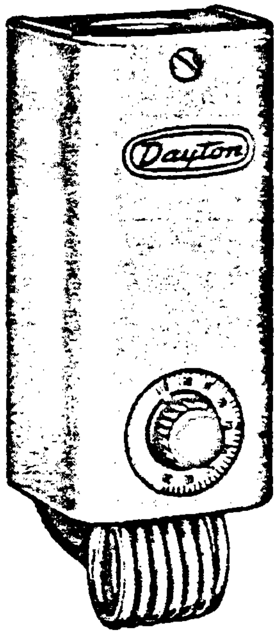

Fig. 1 – Exterior view of Space Thermostat.

Case: .062" cold rolled steel. Gray baked enamel finish.

Cover: .025" cold rolled steel. Gray baked enamel finish.

Contact Unit: Snap-acting contacts in dust-tight tamper proof enclosure.

ELECTRICAL RATINGS

MODEL 2E206

Voltage, A.C.	120	208	240	277
Full Load Amps.	16.0	9.2	8.0	–
Locked Rotor Amps.	76.0	55.2	48.0	–
Non-Inductive or Resistance Load Amps. * (Not Lamp Loads)	22.0	22.0	22.0	22.0
Pilot Duty – 125 VA, 24/600 V. A.C.				

* SPST RATING.

MODEL 2E207

Voltage, A.C.	120	208	240
Full Load Amps.	16.0	9.2	8.0
Locked Rotor Amps.	96.0	55.2	48.0
Non-Inductive or Resistance Load Amps. (Not Lamp Loads)	16.0	9.2	8.0
Pilot Duty – 125 VA, 24/277 V. A.C.			

NOTE: When used as a two circuit switch, the total connected load must not exceed 2000 VA.

DIMENSION DRAWING

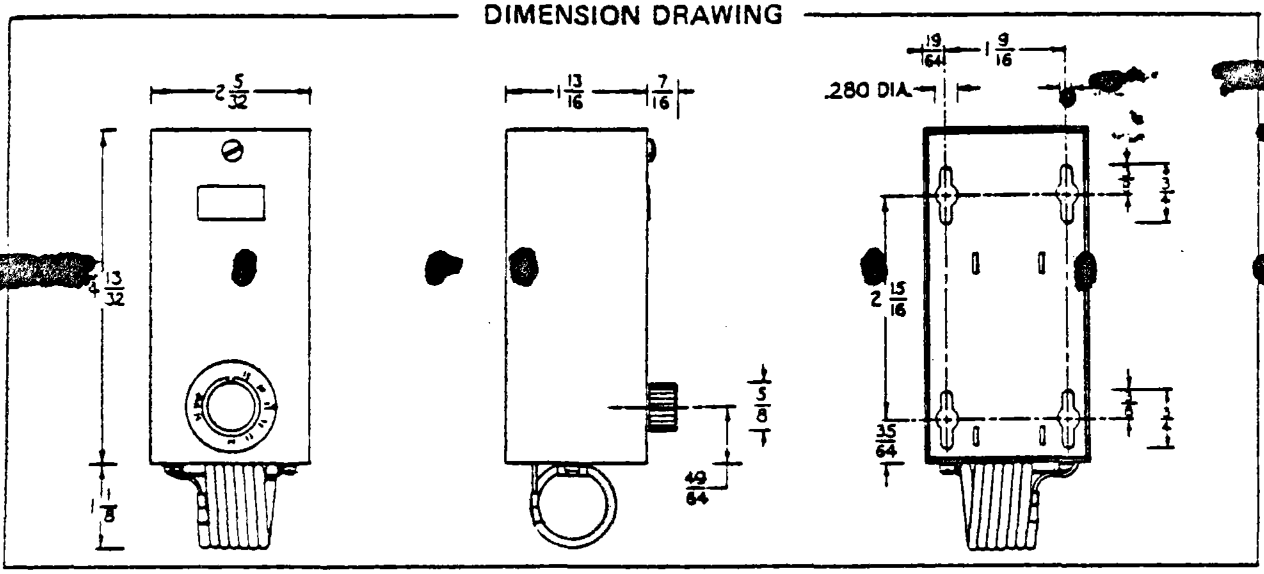

Performance specifications appearing herein are nominal and are subject to accepted manufacturing tolerances and application variables.

OPERATION

Figure 2 illustrates the operation of Model 2E207. On a temperature increase to the dial setting, the circuit between R and Y of the low stage switch (RY_L) closes. Simultaneously the circuit between R and B (RB_L) opens. On a further increase in temperature the high stage switch operates and closes RY_H while simultaneously opening RB_H. The reverse sequencing takes place on a temperature fall.

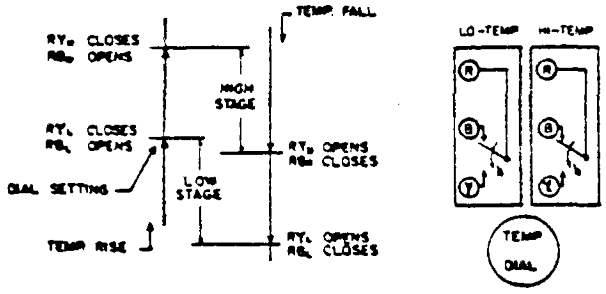

Fig. 2 – Operational diagrams of Model 2E207.

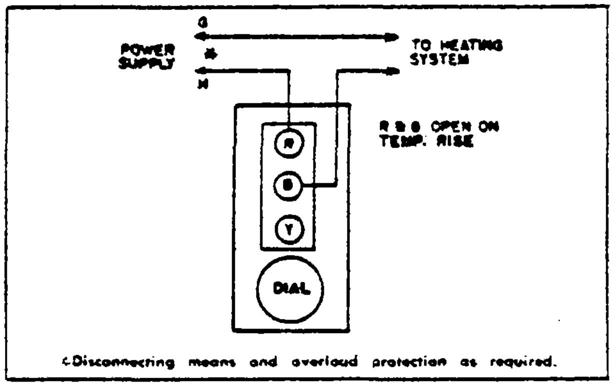

*Disconnecting means and overload protection as required.

Fig. 3 – Model 2E206 in typical heating control circuit.

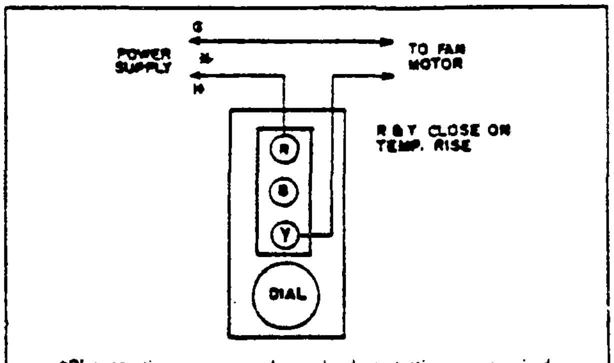

*Disconnecting means and overload protection as required.

Fig. 4 – Model 2E206 in typical ventilating or cooling control circuit.

LOCATION

Mount control 5' or 6' above the floor where it will be exposed to the average temperature of the controlled space. Do not mount control where it will be affected by *unusual* heat or cold, such as directly over an animal stall row or in sunlight. Avoid locations near a door, window, or hay chute. Do not mount on an outside wall.

MOUNTING

CAUTION: Do not dent or deform the sensitive bulb of this control. A dent or deformation will change the calibration and cause the control to cycle at a temperature lower than the dial setting.

CAUTION: On rough mounting surface use top two mounting holes only.

When you mount this control on an uneven surface and pull all four mounting screws down tight, you can twist the case enough to affect thermostat calibration and operation.

WIRING

All wiring should be done in accordance with applicable codes, ordinances and regulations. Figure 3, 4 and 5 illus-

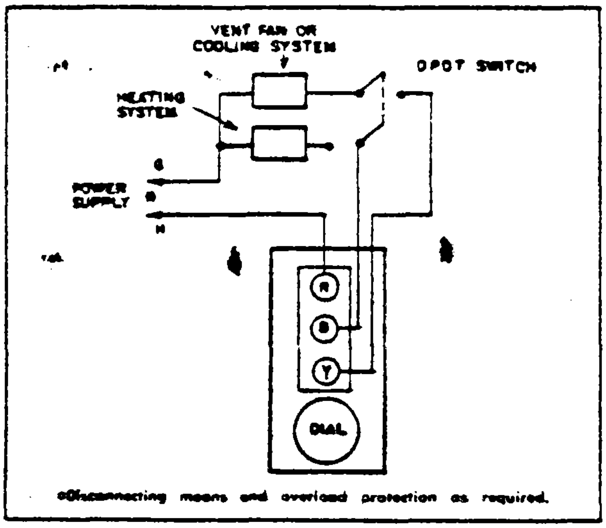

Fig. 5 – Model 2E206 in control of heating and ventilating systems.

trate typical wiring of Model 2E206 for control of heating, cooling, and a combination heating-cooling control system.

Figure 6 shows typical wiring for the control of a two speed ventilating fan. When control temperature element reaches the dial settings of Model 2E207, the low temperature switch starts the fan on low speed. If the space temperature continues to rise, the high temperature switch supplies power to the high speed motor winding while disconnecting the low speed winding.

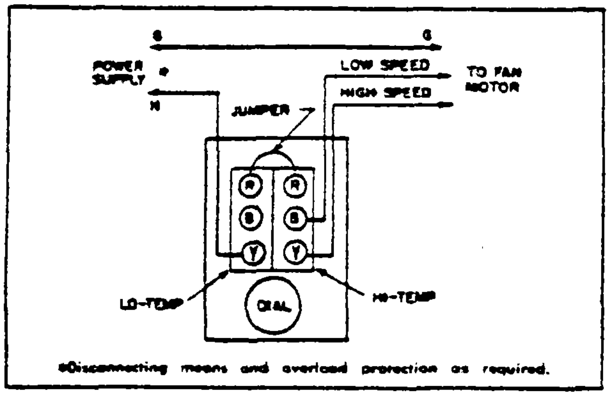

Fig. 6 – Model 2E207 in typical two-speed ventilating fan control circuit.

Figure 7 shows Model 2E207 in a typical hook-up for a two-volume fan application. The fan will start when temperature element reaches the dial setting. If the temperature continues to rise, the damper motor will be energized by the high temperature switch.

Model 2E207 can also be used to control a combination heating and ventilating or cooling system, as shown in Figure 8. A temperature increase to the dial setting will turn off the heating system when the R-B contacts of the low temperature switch break. An increase in temperature of about 3° F. will turn on the fan or cooling system through the R-Y contacts of the high temperature switch.

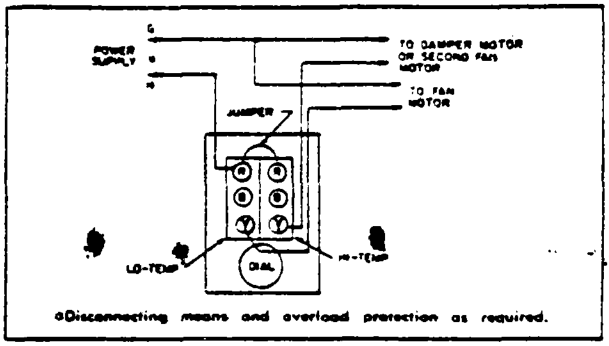

Fig. 7 – Model 2E207 in control of single speed ventilating fan and volume-increase damper motor.

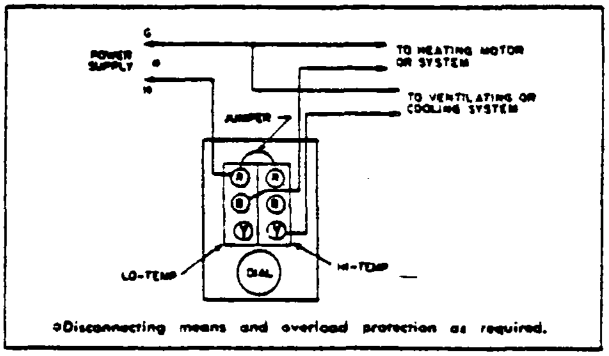

Fig. 8 – Typical wiring of heating and cooling devices to two-stage thermostat (automatic changeover).

Check Out Test: After the control has been wired, it should be checked out for correct operation in the following manner.

1. **Model 2E206:** *Ventilating or Cooling System:* Turn dial clockwise to a setting above space temperature. Fan or cooling system should be off. When dial is turned counterclockwise, the fan or cooling system should turn on approximately at the dial setting.

   Model 2E206: *Heating System:* Turn dial clockwise above the space temperature; the heating unit should be on. When dial is turned counterclockwise, the heating unit should turn off approximately at the dial setting.
2. **Model 2E207:** If hook-up is similar to Figure 6, fan should start at approximately space temperature and should change to high speed as the dial is turned counterclockwise to a lower temperature setting. If wiring is similar to Figure 7, the damper should open as the dial is turned counterclockwise. The devices should act in reverse sequence when the dial is turned clockwise to a higher setting.
3. If control devices do not operate in the manner described above, check all wiring for short circuits and tightness of wiring connections. If controlled devices operate in reverse (start in high or fully open position) check wiring as it is probably reversed.

DAYTON 1-YEAR LIMITED WARRANTY

Dayton Controls are warranted by Dayton Electric Mfg. Co. (Dayton) to the original user against defects in workmanship or materials under normal use (rental use excluded), for one year after date of purchase.

Any part which is determined to be defective in material or workmanship and returned to an authorized service location, as Dayton designates, shipping costs prepaid, will be repaired or replaced at Dayton's option. For warranty claim procedures, see "Prompt Disposition" below. This warranty gives purchasers specific legal rights, and purchasers may also have other rights which vary from state to state.

WARRANTY DISCLAIMER. Dayton has made a diligent effort to illustrate and describe the products in this literature accurately; however, such illustrations and descriptions are for the sole purpose of identification, and do not express or imply a warranty that the products are merchantable, or fit for a particular purpose, or that the products will necessarily conform to the illustrations or descriptions.

Except as provided below, no warranty or affirmation of fact, express or implied, other than as stated in "LIMITED WARRANTY" above is made or authorized by Dayton, and Dayton's liability in all events is limited to the purchase price paid.

Certain aspects of disclaimers are not applicable to consumer products; e.g., (a) some states do not allow the exclusion or limitation of incidental or consequential damages, so the above limitation or exclusion may not apply to you; (b) also, some states do not allow limitations on how long an implied warranty lasts, consequently the above, limitation may not apply to you; and (c) by law, during the period of this Limited Warranty, any implied warranties of merchantability or fitness for a particular purpose applicable to consumer products purchased by consumers, may not be excluded or otherwise disclaimed.

PROMPT DISPOSITION. Dayton will make a good faith effort for prompt correction or other adjustment with respect to any product which proves to be defective within warranty. For any product believed to be defective within warranty, first write or call dealer from whom product was purchased. Dealer will give additional directions. If unable to resolve satisfactorily, write to Dayton at address below, giving dealer's name, address, date and number of dealer's invoice, and describing the nature of the defect. If product was damaged in transit to you, file claim with carrier.

DAYTON ELECTRIC MFG. CO., 5959 W. HOWARD ST., CHICAGO, ILLINOIS 60648

Litho in U.S.A.

1-25-77

Equipment Number	Description	Maintenance Section	One-Line Dwg. Number
	Power Panels		
PPA	Receiver Tower Power Panel	3.6.1	40E7005132120
PP1	Receiver Tower - Distr. Panel	3.6.1	40E7005132120
PP2	Bldg 712 - Distr. Panel	3.6.1	40E7005132120
PP3	Bldg 702 - Distr. Panel	3.6.1	40E7005132120
PP4	Bldg 709 - Distr. Panel	3.6.1	40E7005132120
PP5	Bldg 710 - Distr. Panel	3.6.1	40E7005132120
PP6/PP7	Warehouse - Distr. Panel	3.6.1	40E7005132120
PPDC1	125 VDC Switchboard - Distr. Panel	3.6.1	40E7005132120
	Lighting Panels		
LP1	Receiver Tower - Lighting Panel	3.6.1	40E7005132120
LP2	Bldg 702 - Lighting Panel	3.6.1	40E7005132120
LP3	Bldg 712 - Lighting Panel	3.6.1	40E7005132120
LP8	Bldg 706 - Lighting Panel	3.6.1	40E7005132120
LP/EML1	Receiver Tower Emergency Lighting Panel	3.6.1	40E7005132120
LP6/7	Warehouse - Lighting Panel	3.6.1	40E7005132120

3.6 POWER PANELS

3.6.1 Power Panels

3.6.1.1 The following section contains data on the miscellaneous power panels and lighting panels listed in the index on page 3.6.1-1. They generally include a description of the various junction boxes as well as the circuit breaker data and panelboard information.

Nema Type 4 Panel Enclosures

AN ENCLOSURE INTENDED FOR EITHER INDOOR OR OUTDOOR USE
TO PROVIDE A DEGREE OF PROTECTION AGAINST WINDBLOWN DUST
AND RAIN, SPLASHING WATER AND HOSE-DIRECTED WATER.
(PANELS ARE INCLUDED IN LIST PRICE)

Nema Type 4 Panel Enclosures

Listed by
Underwriters' Laboratories, Inc.

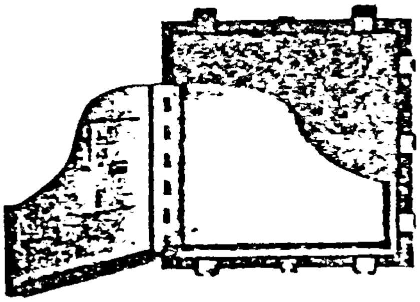

INDOOR – Nema Type 4 enclosures are designed to house electrical controls in areas which may be regularly hosed down or are otherwise very wet. They are suitable for use in dairies, breweries, etc.

CONSTRUCTION – All enclosures have removable panels mounted on collar studs. They are similar in design and finish to the Nema 12 Type boxes except as follows:

1. Additional clamps are added on three sides of the hinged doors.
2. Solid neoprene gaskets are used on the doors.
3. All exterior hardware is stainless steel.
4. Double door floor mounted enclosures may be fabricated with removable or stationary center post between the doors. Screw clamps are used instead of the usual three point latch and handle arrangement.

(Please specify either removable or stationary center post when ordering.)

FINISH – The standard finish is white enamel interior and grey prime exterior; surfaces are phosphatized prior to painting.

OUTDOOR – Special finishing of the exterior is necessary. Contact factory for prices and details.

See reverse side for drawings.

SINGLE DOOR WALL MOUNTED ENCLOSURES

Catalog Number	Box Size A x B x C	Panel Size	Weight Each	List Each
FAW16126-4	16x12x6	13x9	26	$134.50
FAW20166-4	20x16x6	17x13	38	158.80
FAW20206-4	20x20x6	17x17	42	173.40
FAW24206-4	24x20x6	21x17	56	193.20
FAW24126-4	24x12x6	21x9	37	160.60
FAW24246-4	24x24x6	21x21	62	209.70
FAW30206-4	30x20x6	27x17	63	214.30
FAW30246-4	30x24x6	27x21	74	234.00
FAW36246-4	36x24x6	33x21	94	258.00
FAW16128-4	16x12x8	13x9	24	140.50
FAW20168-4	20x16x8	17x13	35	166.50
FAW20208-4	20x20x8	17x17	47	182.40
FAW24208-4	24x20x8	21x17	53	202.70
FAW24248-4	24x24x8	21x21	67	221.30
FAW30208-4	30x20x8	27x17	70	225.20
FAW30248-4	30x24x8	27x21	82	245.70
FAW36248-4	36x24x8	33x21	94	271.80
AW36308-4	36x30x8	33x17	115	308.10
AW42308-4	42x30x8	39x27	130	339.40
AW42368-4	42x36x8	39x33	153	374.80
AW48368-4	48x36x8	45x33	183	406.50
AW60368-4	60x36x8	57x33	213	456.00
FAW201610-4	20x16x10	17x13	43	174.60
FAW302410-4	30x24x10	27x21	93	257.60
AW363010-4	36x30x10	33x27	122	322.60
AW483610-4	48x36x10	45x33	198	428.20
AW603610-4	60x36x10	57x33	233	481.40
FAW302412-4	30x24x12	27x21	92	269.50
AW363012-4	36x30x12	33x27	132	337.10
AW483612-4	48x36x12	45x33	201	457.10
AW363016-4	36x30x16	33x27	144	373.70

"ABC DIMENSIONS SHOWN ARE INSIDE MEASUREMENTS"

DOUBLE DOOR FLOOR MOUNTED ENCLOSURES

Catalog Number	Box Size A x B x C	Panel Size	Weight Each	List Each
AW604810-4	60x48x10	56x44	450	$ 977.90
AW606012-4	60x60x12	56x56	595	1158.20
AW727212-4	72x72x12	68x68	785	1456.80

All double door floor mounting cabinets furnished with 12" stands unless otherwise specified.

CIRCLE A-W PRODUCTS SOLD BY ELECTRICAL WHOLESALERS ONLY

Enclosure bodies and doors equipped with suitable stiffening.

GALVANIZED: For Electro-Galvanized after fabrication or Hot Dip Galvanized after fabrication, consult factory for prices.

SPECIAL SIZES: Special sizes and or designs fabricated upon request.

Screw Cover Can - Nema Type 3

THIS ENCLOSURE IS INTENDED FOR OUTDOOR USE TO PROVIDE A DEGREE OF PROTECTION AGAINST WINDBLOWN DUST AND RAIN.

Constructed with Continuous welded seams and equipped with gaskets.

Listed by Underwriters' Laboratories, Inc.

Catalog Number	**Size Inches	List Each
444 WPSC	4x4x4	$18.80
464 WPSC	4x6x4	19.30
664 WPSC	6x6x4	21.00
684 WPSC	6x8x4	22.60
6124 WPSC	6x12x4	29.80
884 WPSC	8x8x4	27.30
8104 WPSC	8x10x4	30.00
8124 WPSC	8x12x4	34.40
10104 WPSC	10x10x4	35.00
10124 WPSC	10x12x4	40.70
12124 WPSC	12x12x4	44.10
12184 WPSC	12x18x4	57.30
18184 WPSC	18x18x4	68.10

Catalog Number	**Size Inches	List Each
666 WPSC	6x6x6	$ 30.20
686 WPSC	6x8x6	32.10
6126 WPSC	6x12x6	39.40
886 WPSC	8x8x6	36.80
8106 WPSC	8x10x6	39.40
8126 WPSC	8x12x6	44.10
10106 WPSC	10x10x6	45.30
10126 WPSC	10x12x6	50.20
12126 WPSC	12x12x6	52.70
12166 WPSC	12x16x6	63.50
12186 WPSC	12x18x6	66.10
12246 WPSC	12x24x6	74.20
15186 WPSC	15x18x6	68.90
15246 WPSC	15x24x6	80.80
18186 WPSC	18x18x6	77.90
18246 WPSC	18x24x6	116.60
24246 WPSC	24x24x6	133.90
24306 WPSC	24x30x6	155.50

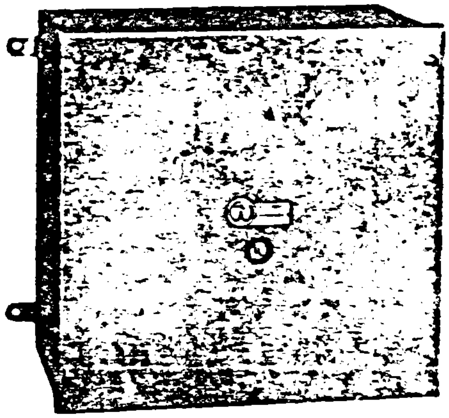

SCREW COVER CAN - NEMA TYPE 3

When ordering, specify Catalog Number.

Catalog Number	**Size Inches	List Each
12128 WPSC	12x12x8	$ 65.30
12168 WPSC	12x16x8	73.10
12188 WPSC	12x18x8	74.70
12248 WPSC	12x24x8	84.10
16248 WPSC	16x24x8	99.10
18188 WPSC	18x18x8	90.70
18248 WPSC	18x24x8	131.70
24248 WPSC	24x24x8	148.30

Catalog Number	**Size Inches	List Each
181810 WPSC	18x18x10	$131.80
242410 WPSC	24x24x10	208.10
243010 WPSC	24x30x10	235.00

**First dimension indicates the Width.
Second dimension indicates the Height.
Third dimension indicates the Depth.

FINISH: Electro-Galvanized after fabrication. For hot dipped galvanized after fabrication, consult factory.
GASKET: Furnished with Neoprene Gasket.
SPECIAL SIZES: Filled promptly to your specifications.

CIR A W PRODUCTS SOLD BY
ELE ICAL WHOLESALERS ONLY

See Section 2 Page 8 for Theoretical Weights.

REF DWG 761

PNL HT 46 3/4

☐ COPPER BUS

STL SHIP

SERVICE VOLTAGE 277/480 | 3 PHASE 4 WIRE

225	225	225
MAIN BKR RATING	MAIN BUS RATING	NEUTRAL RATING

U/L LABEL S.C.R. 14 K

CABINET MOUNTING ☑ Surface ☐ Flush

BOX SIZE 60 H. 24 W. 6 D

GUTTER Top, Bot, L, R

BOX STYLE NO. P.V. GARRITO ⬡

TRIM STYLE NO. " " △

AUX TRIM

☐ MTG PAN

☑ TRIM N.P. (1 X 2½) W/P

☐ PANEL MTG. BKT.: S# 840A008G01 ☐ PERM CKT #2419B40

☐ LOCKOFFS ☐

☐ GND BUS 840A697 ☐ GND BUS SLA667

(TOP)

☑ MAIN 1 # 4-350) TERM PER PHASE

☐ NEUTRAL # TERM

9X

VVV HKB 3225 MLB

CKT. NO	FRAME	Poles	AMPS	FRAME	Poles	AMPS	CKT. NO.
1	HFB	3	100	HFB	3	50	2
3		—			—		4
5					—		6
7		3	50		3	40	8
9		—			—		10
11		—			—		12
13		3	30		3	20	14
15		—			—		16
17		—			—		18
19		2	20		3	20	20
21		—			—		22
23	SPACE				—		24
25	HFB	3	20		3	20	26
27		—			—		28
29		—			—		30
31		3	20		3	20	32
33		—			—		34
35		—			—		36
37							38
39							40
41							42

22V

1X

2Y

TK 5/3/81

1 #4-350

☐ MAIN # TERM PER PHASE

☑ NEUTRAL 1 # [illegible] TERM

(BOTTOM)

Stearns-Roger

○

○ C21700 MAY 1 '81

○

S-R No. CP11 File No. 22

QTY	BKRS/SW		QTY	BKRS/SW	
1	HKB3250F				
1	HKB3225-T				
1	HFB3100				
2	HFB3050				
1	HFB3030				
1	HFB2020	AP			
6	HFB3020				
1	HFB3040				

ITEM	QUAN	MARKING	PANEL TYPE
		PANEL PPA	[illegible]

☐ REVIEWED/NO COMMENTS

☒ REVIEWED/SEE COMMENTS

☐ REVISE PER COMMENTS & RESUBMIT FOR REVIEW

☐ SEE LETTER OF TRANSMITTAL

ENG. DEPT. BY [illegible] DATE MAY 14 1981

NEITHER REVIEW, COMMENT, NOR REVISION RELIEVES MANUFACTURER OR CONTRACTOR FROM RESPONSIBILITY FOR COMPLIANCE WITH SPECIFICATIONS OR WITH ALL OTHER CONTRACT REQUIREMENTS.

Stearns-Roger
INCORPORATED

RETURN TO

ON OR BEFORE

Westinghouse Electric Corporation VISALIA, CALIF. D.E.D.

PANELBOARD DRAWING

ENGR

DATE

SHEET 36

1

BSL E04 1

3.6.1-4

ORIGINAL

REF. DWG L 26

PNL HT. 34

☐ COPPER BUS

STL SHIP

(TOP)

☑ MAIN 1 # 2-1/0 TERM PER PHASE

☐ NEUTRAL # TERM

SERVICE VOLTAGE 120/208 3 PHASE 4 WIRE

100 MAIN BKR. RATING

100 MAIN BUS RATING

100 NEUTRAL RATING

U/L LABEL S.C.R. 10 K

CABINET MOUNTING ☑ Surface ☐ Flush

BOX SIZE 48 H. 24 W. 6 D

GUTTER 5 Top, 5 Bot, 6 1/2 L, 6 1/2 R,

BOX STYLE NO. CS-0 21-DS

TRIM STYLE NO. "

AUX TRIM

☐ MTG PAN

☑ TRIM N.P. (1 X 2¼) W/P

☐ PANEL MTG. BKT.: S# 840A008G01

☐ PERM CKT #2419B40

☐ LOCKOFFS

☐

☐ GND BUS 840A697

☐ GND BUS SLA667

○

○

○

CKT. NO.	FRAME	Poles	AMPS	FRAME	Poles	AMPS	CKT. NO.
4 1/2							
	BA	3	100				
	MLB	—					
1	BA	1	20	BA	1	20	2
3		2	20		2	20	4
5		—			—		6
7		1	20		1	20	8
9							10
11							12
13							14
15							16
17							18
19							20
21							22
23							24
25							26
27							28
29							30
31							32
33							34
35							36
37							38
39							40
41							42

3

N

4 1/2

QTY	BKRS/SW		QTY	BKRS/SW	
1	BA3100				
2	BA2020				
38	BAB1020				

ITEM	QUAN.	MARKING	PANEL TYPE
6	1	PANEL PP1	PIBR

☐ MAIN # TERM PER PHASE

☑ NEUTRAL 1 # 14-1/0 TERM

(BOTTOM)

Westinghouse Electric Corporation VISALIA, CALIF. D.E.D. 2221

CKT. 42

PANELBOARD DRAWING

ENGR JR

DATE 3/5/7

LA 45:27

SHEET 2

BSL E04 1

REF. DWG 196

PNL HT. - = 33

☐ COPPER BUS

STL SHIP

(TOP)

☒ MAIN 1 # 2 - 1/0 TERM PER PHASE

☐ NEUTRAL # TERM

CKT. NO	FRAME	Poles	AMPS	FRAME	Poles	AMPS	CKT. NO.
>	BA	3	100				
>	MIB	–					
>		–					
1	BA	1	20	BA	1	20	2
3							4
5							6
7							8
9							10
11							12
13							14
15							16
17							18
19							20
21							22
23							24
25							26
27							28
29							30
31							32
33							34
35							36
37							38
39							40
41							42

...

☐ MAIN # TERM PER PHASE

☑ NEUTRAL 1 # 14 - 1/0 TERM

(BOTTOM)

SERVICE VOLTAGE 120/208 3 PHASE 4 WIRE

100 MAIN BKR RATING

100 MAIN BUS RATING

100 NEUTRAL RATING

U/L LABEL S.C.R 10 K

CABINET MOUNTING ☒ Surface ☐ Flush

BOX SIZE 41 H. 20 W. 5 3/4 D

GUTTER 5 Top. 5 Bot. 6 1/2 L. 6 1/2 R.

BOX STYLE NO. 42041 WHS ⬡

TRIM STYLE NO. FFRX 2041-S △

AUX TRIM

☐ MTG. PAN

☒ TRIM N.P. (1 X 2½)

☒ PANEL MTG. BKT.: S# 840A008G01

☐ PERM CKT #2419B40

☐ LOCKOFFS

☐

☐ GND BUS 840A697

☐ GND BUS SLA667

⬡

△

☐

○

○

○

QTY	BKRS/SW		QTY	BKRS/SW	
1	BA3100				
42	BAB1020				

ITEM	QUAN.	MARKING	PANEL TYPE
7	1	PANEL PP2	B10B

Westinghouse Electric Corporation VISALIA, CALIF. D.E.D. 3331

CKT. 42

PANELBOARD DRAWING

ENGR SR

DATE 2/6/77

LAA567

SHEET 3

BSL E04-1

REF DWG 1 [illegible]

PNL HT. 24

☐ COPPER BUS

STL SHIP

(TOP)

☒ MAIN 1 # 8-1/0 TERM PER PHASE

☐ NEUTRAL # TERM

CKT. NO.	FRAME	Poles	AMPS	FRAME	Poles	AMPS	CKT NO
	BA	3	100				
	MIB	—					
1	BA	2	20	BA	2	20	2
3		—			—		4
5		—			—		6
7		3			3	20	8
9		—			—		10
11		—			—		12
13		2			1	20	14
15		—					16
17		—					18
19		2					20
21		—					22
23		-					24
25		3	20		1	20	26
27		—			1	20	28
29		—			1	20	30
31							32
33							34
35							36
37							38
39							40
41							42

N

7

9

TK 5/13/21

☐ MAIN # TERM. PER PHASE

☒ NEUTRAL 1 # 14-1/0 TERM

(BOTTOM)

SERVICE VOLTAGE 120/208 3 PHASE 4 WIRE

MAIN BKR RATING	MAIN BUS RATING	NEUTRAL RATING
100	100	100

U/L LABEL S.C.R 10 K

CABINET MOUNTING ☒ Surface ☐ Flush

BOX SIZE 32 H, 20 W, 5 3/4 D

GUTTER 5 Top, 5 Bot, 5 1/2 L, 5 1/2 R,

BOX STYLE NO. 42032 WHS. ⬡

TRIM STYLE NO. FFR X 2032-[illegible] △

AUX TRIM

☐ MTG PAN

☒ TRIM N.P. (1 X 2½)

☒ PANEL MTG. BKT.: S# 840A008G01 ☐ PERM CKT #2419B40

☐ LOCKOFFS ☐

☐ GND BUS 840A697 ☐ GND BUS SLA667

⬡ △

☐

○

○

○

QTY	BKRS/SW		QTY	BKRS/SW	
1	BA3100				
2	BA3020				
6	BA1020				
✓					

ITEM	QUAN.	MARKING	PANEL TYPE
3	1	PANEL [illegible]	B103

Westinghouse Electric Corporation VISALIA, CALIF. D.E.D. 3321 CKT. 30

PANELBOARD DRAWING ENGR AR DATE 2/[illegible] L410[illegible] SHEET 4

BSL E04-1

ORIGINAL 3.6.1-7

REF DWG 196

PNL HT 21

☐ COPPER BUS

STL SHIP

(TOP)

☒ MAIN 1 # 14-4/0 TERM PER PHASE

☐ NEUTRAL # TERM

CKT. NO.	FRAME	Poles	AMPS	FRAME	Poles	AMPS	CKT. NO.
>	BA	3	70				
>	MIB	—					
>							
1	BA	1	20	BA	1	20	2
3							4
5							6
7							8
9							10
11							12
13							14
15							16
17							18
19							20
21							22
23							24
25							26
27							28
29							30
31							32
33							34
35							36
37							38
39							40
41							42

☐ MAIN # TERM. PER PHASE

☒ NEUTRAL 1 # 14-1/0 TERM

(BOTTOM)

SERVICE VOLTAGE 120/208 | 3 PHASE 4 WIRE

70	100	100
MAIN BKR RATING	MAIN BUS RATING	NEUTRAL RATING

U/L LABEL S.C.R 10 K

CABINET MOUNTING ☑ Surface ☐ Flush

BOX SIZE 32 H. 20 W. 5¾ D

GUTTER 5 Top. 5 Bot. 6½ L. 6½ R.

BOX STYLE NO. UAD32 WHS ⬡

TRIM STYLE NO. EER Y 2022-3 △

AUX TRIM

☐ MTG PAN

☒ TRIM N.P. (1 X 2½)

☒ PANEL MTG. BKT.: S# 840A008G01 ☐ PERM CKT #2419B40

☐ LOCKOFFS ☐

☐ GND BUS 840A697 ☐ GND BUS SLA667

⬡ △

☐

○

○

○

QTY	BKRS/SW		QTY	BKRS/SW	
1	BA3070				
30	BAB1020				

ITEM	QUAN	MARKING	PANEL TYPE
10	1	PANEL PP5	
9	1	PANEL PP 4	B10B

Westinghouse Electric Corporation VISALIA, CALIF. D.E.D. 2231 CKT 3

PANELBOARD DRAWING ENGR JC DATE 3/6/77 LA4A677 SHEET 5

BSL E04-1

REF DWG 761

PNL HT 41½

☐ COPPER BUS

1-60/100A-P-12CKT

1-60/100Amp-14CKT

STL SHIP

(TOP)

☐ MAIN # TERM PER PHASE

☑ NEUTRAL 1 # 12-1/0 TERM

SERVICE VOLTAGE 277/480 3 PHASE 4 WIRE

50 MAIN BKR RATING

100 MAIN BUS RATING

100 NEUTRAL RATING

U/L LABEL SCR 14 K

CABINET MOUNTING ☒ Surface ☐ Flush

BOX SIZE 73½ H. 20 W. 5¾ D

GUTTER 5 Top. 5 Bot. 6½ L. 6½ R.

BOX STYLE NO. SMWPY2053/050

TRIM STYLE NO. SMWPY2053/1050

AUX TRIM

☐ MTG PAN RC G01

☒ TRIM N.P. (1 X 2½)

W/P

☐ PANEL MTG BKT.: S# 840A008G01

☐ PERM CKT #2419B40

☐ LOCKOFFS

☐ C/A BOX/TRIM

☐ GND BUS 840A697

☐ GND BUS SLA667

☒ PER VIP-B4

☒ PER VIP-TT (20% High AUX TOP)

⊗ ASCO# 1025-3510 277V.

○ AP

○

N

CKT. NO	FRAME	Poles	AMPS	FRAME	Poles	AMPS	CKT NO.
2X							
1	EHB	1	20	EHB	1	20	2
3		1	20				4
5			20				6
7			20				8
9			20				10
11			20				12
~~13~~				14½			~~14~~
~~15~~							~~16~~
13	EHB	1	20	EHB	1	20	14
15		1	20			20	16
17		1	20			50	18
19		1	20		1	SPC	20
21		1	20		1	SPC	22
23		1	20		1	SPC	24
						1	38
							40
							42

SPLIT

20

QTY	BKRS/SW		QTY	BKRS/SW	
14	EHB1020				
2	EHB3050				
1	EHB1050				

TK 5/12/81

☑ MAIN 1 # 12-1/0 TERM. PER PHASE

☐ NEUTRAL # TERM

(BOTTOM)

ITEM	QUAN.	MARKING	PANEL TYPE
			24
11	1	PANEL LP1	NEHB

Westinghouse Electric Corporation VISALIA, CALIF. D.E.D.

CKT

PANELBOARD DRAWING

ENGR.

DATE

SHEET 6

BSL E04 1

REF. DWG 761

PNL HT

☐ COPPER BUS

STL SHIP

(TOP)

☑ MAIN 1 # 14 - 1/0 TERM PER PHASE

☐ NEUTRAL # TERM

2X

CKT NO	FRAME	Poles	AMPS		FRAME	Poles	AMPS	CKT. NO.
1	EHB	3	50		~~AEB~~	~~3~~	~~20~~	~~2~~
3		—						4
5								6
7	1	1	20		EHB	1	20	2 8
9	3							4 10
11	5							6 12
13	7							8 14
15	9			1-4X				10 16
17	11							12 18
19	13							14 20
21	15							16 22
23	17							18 24
25	19							20 26
27	21							22 28
29	23							24 30
31	2X			N				32
33								34
35								36
37								38
39								40
41				...				42

TK 5/13/81

☐ MAIN # TERM. PER PHASE

☐ NEUTRAL # 14 - 1/0 TERM

(BOTTOM)

SERVICE VOLTAGE 277/480 | 3 PHASE 4 WIRE

MAIN BKR. RATING	MAIN BUS RATING	NEUTRAL RATING
50	100	100

U/L LABEL S.C.R 14 K

CABINET MOUNTING ☑ Surface ☐ Flush

BOX SIZE 37 H. 20 W. 5 3/4 D

GUTTER 5 Top. 6 Bot. 4 L. 4 R.

BOX STYLE NO. Y2037 WHS. ⬡

TRIM STYLE NO. EEW2037S △

AUX TRIM

☐ MTG PAN

☑ TRIM N.P (1 X 2½)

☐ PANEL MTG BKT.: S# 840A008G01

☐ PERM CKT #2419B40

☐ LOCKOFFS

☐

☐ GND BUS 840A697

☐ GND BUS SLA667

⬡ △

☐

○

○

○

QTY	BKRS/SW		QTY	BKRS/SW
1	EHB3050			
24	EHB1020			

ITEM	QUAN.	MARKING	PANEL TYPE
			24
12	1	PANEL LP2	WEHC

Westinghouse Electric Corporation VISALIA, CALIF. D.E.D.

2222

CKT 25 SHEET

PANELBOARD DRAWING

ENGR. JR

DATE 7/21/81

LA 13677

7

BSL E04-1

REF. DWG 141
PNL HT.
☐ COPPER BUS

STL SHIP

(TOP)

☒ MAIN 1 # 14 - 4? TERM PER PHASE
☐ NEUTRAL # TERM

SERVICE VOLTAGE 120/208 3 PHASE 4 WIRE

50	100	100
MAIN BKR. RATING	MAIN BUS RATING	NEUTRAL RATING

U/L LABEL S.C.R. 10 K

CABINET MOUNTING ☒ Surface ☐ Flush
BOX SIZE 29 H. 20 W. 5 3/4 D
GUTTER 5 Top, 5 Bot, 6 1/2 L, 6 1/2 R,
BOX STYLE NO. 42029 LHS ○
TRIM STYLE NO. FFSX 2029-S △
AUX TRIM
☐ MTG PAN
☒ TRIM N.P. (1 X 2½)

☒ PANEL MTG. BKT : S# 840A008G01
☐ PERM CKT #2419B40
☐ LOCKOFFS
☐
☐ GND BUS 840A697
☐ GND BUS SLA667

○
○
○

BA 350
MLO

CKT NO.	FRAME	Poles	AMPS	FRAME	Poles	AMPS	CKT. NO.
1	BA	1	20	BA	1	20	2
3						30	4
5						30	6
7						20	8
9							10
11							12
13			SPC			SPC	14
15							16
17							18
19							20
21							22
23							24
25							26
27							28
29							30
31							32
33							34
35							36
37							38
39							40
41							42

N

. . .

10

TK 5/13/81

QTY	BKRS/SW		QTY	BKRS/SW	
1	BA2050				
1					
12	BAB1020				
2	BAB 1030				

☐ MAIN # TERM. PER PHASE
☑ NEUTRAL 1 # 14 - 4? TERM

(BOTTOM)

ITEM	QUAN.	MARKING	PANEL TYPE
13	1	PANEL LP4	[illegible]

Westinghouse Electric Corporation VISALIA, CALIF. D.E.D. 2291

CKT. 24

PANELBOARD DRAWING

ENGR [illegible]
DATE [illegible]

[illegible]

SHEET 7

BSL E04-1

REF. DWG. 761

PNL HT 33

☐ COPPER BUS

STL SHIP

(TOP)

☐ MAIN # 1 #8-1/0 TERM PER PHASE

☐ NEUTRAL # TERM

2X

CKT. NO.	FRAME	Poles	AMPS
D	HFB	3	100
D	MIB	—	
D		—	
7 1	HFB	3	50
9 3		—	
11 5		—	
13 7		3	15
15 9		—	
17 11		—	
19 13		3	20
21 15		—	
23 17		—	
25 19		3	SPC
27 21		—	
29 23		—	
31			
33			
35			
37			
39			
40			

15X

1X

5X NO BUS

FRAME	Poles	AMPS	CKT. NO.
			2
			4
			6
HFB	3	50 2	8
	—	4	10
	—	6	12
	3	20 8	14
	—	10	16
	—	12	18
	3	SPC 14	20
	—	16	22
	—	18	24
	3	SPC 20	26
	—	22	28
	—	24	30
			32
			34
			36
			38
			40
			42

TK 5/13/81

☐ MAIN # TERM PER PHASE

☐ NEUTRAL # TERM

(BOTTOM)

SERVICE VOLTAGE 480 | 3 PHASE 3 WIRE

100 MAIN BKR RATING

100 MAIN BUS RATING

NEUTRAL RATING

U/L LABEL S.C.R. 25 K

CABINET MOUNTING ☒ Surface ☐ Flush

BOX SIZE 47 H. 24 W. 6 D

GUTTER 6 Top, 6 Bot, 4 L, 4 R,

BOX STYLE NO. CERRITOS ⬡

TRIM STYLE NO. CERRITOS △

AUX TRIM

☐ MTG PAN

☑ TRIM N.P. (1 X 2½) W/P

☐ PANEL MTG. BKT.: S# 840A008G01

☑ PERM CKT #2419B40

☐ LOCKOFFS

☐

☐ GND BUS 840A697

☐ GND BUS SLA667

⬡ △

☐

○

○

○

QTY	BKRS/SW		QTY	BKRS/SW	
1	HFB3100				
2	3050				
1	3015				
2	3020				

ITEM	QUAN	MARKING	PANEL TYPE
14	1	PANEL RSP-3	HWFB

Westinghouse Electric Corporation VISALIA, CALIF. D.E.D. 3732

CKT 24

PANELBOARD DRAWING

ENGR. JR

DATE 3/9/77

LA49687

SHEET 9

BSL E04-1

REF DWG 761

PNL HT. 32

☐ COPPER BUS

STL

SHIP

(TOP)

☑ MAIN 1 # 1/4-250 TERM PER PHASE

☐ NEUTRAL # TERM

CKT NO.	FRAME	Poles	AMPS		FRAME	Poles	AMPS	CKT. NO.
>	EB	3	100	3X				
>	MIB	=						
>								
1	QBGF	1	15		QBGF		15	2
3	QBGF		20	15	QBGF	15	20	4
5	EB		20 - 15		QBGF		15	6
7			15	2X	EB		20	8
9			20				20	10
11			15				15	12
13			15				15	14
15			15				20	16
17			15				20	18
19			15				20	20
21			SPC	12X			SPC	22
23								24
25								26
27								28
29								30
31								32
33								34
35								36
37								38
39								40
41								42

1X FILLER

7

TK 3/13/81

☐ MAIN # TERM. PER PHASE

☑ NEUTRAL 1 # 1/4-1/0 TERM

(BOTTOM)

SERVICE VOLTAGE 120/208 | 3 PHASE 4 WIRE

100 MAIN BKR RATING

100 MAIN BUS RATING

100 NEUTRAL RATING

U/L LABEL S.C.R 10 K

CABINET MOUNTING ☒ Surface ☐ Flush

BOX SIZE 47 H. 20 W. 5 3/4 D

GUTTER 6 Top, 6 Bot, 4 L, 4 R

BOX STYLE NO. CERRITOS ⬡

TRIM STYLE NO. CERRITOS △

AUX TRIM

☐ MTG PAN

☑ TRIM N.P. (1 X 2½) W/P

☐ PANEL MTG. BKT.: S# 840A008G01 ☐ PERM CKT #2419B40

☐ LOCKOFFS ☐

☐ GND BUS 840A697 ☐ GND BUS SLA667

⬡ △

☐ ○

○

○

QTY	BKRS/SW		QTY	BKRS/SW	
1	EB 3100				
9	EB1015				
4	EB1020				
1	EB1030				
5	QBGF 1015 AF				
1	EB 2020				

ITEM	QUAN.	MARKING	PANEL TYPE
			.30
15	1	PANEL RSP-1	(L)a4

Westinghouse Electric Corporation VISALIA, CALIF. D.E.D. 3332 → CKT 25

PANELBOARD DRAWING

ENGR SR

DATE 3/9/81

LA 42677

SHEET 10

BSL E04 1

REF. DWG 764

PNL HT. 46 3/4

STL SHIP

(TOP)

☐ MAIN # TERM PER PHASE

☒ NEUTRAL 1 # 14 - 1/0 TERM

SERVICE VOLTAGE 277 1 PHASE 2 WIRE

50 MAIN BKR RATING

100 MAIN BUS RATING

NEUTRAL RATING

~~U/L LABEL~~ 14K

CABINET MOUNTING ☒ Surface ☐ Flush

BOX SIZE 60 H. 24 W. 6 D

GUTTER 6 Top. 6 Bot. 4 L. 4 R.

BOX STYLE NO CERRITOS (SUN)

TRIM STYLE NO. CERRITOS

☒ TRIM N.P. (1 X 2½) W/P

☐ PANEL MTG. BKT., S# 840A008G01

2X

CKT. NO.	FRAME	Poles	AMPS	FRAME	Poles	AMPS	CKT. NO.
1	EHB	1	20	EHB	1	20	2
3							4
5							6
7						1PL	8
9							10
11							12
		4	[illegible]		2	50	←
			[illegible]		—	M/P	←

50 AMP BUS

FULL BARRIER

1X

3X NO BUS

ASCO #5440 4P25A

4P25A

INDIVIDUALLY MTD ASCO UNDER DEAD FRONT

11 - EHB1020

1 - EHB2050

12

1 - ASCO #1054-5440 277V. (AP)

4P25A

1 - GALV. BARRIER PER SK-11-A

TK 3/3/81

☑ MAIN 1 # 14 - 1/0 TERM. PER PHASE

☐ NEUTRAL # TERM

(BOTTOM)

ITEM	QUAN.	MARKING	PANEL TYPE
16	1	PANEL EMH	WEHB

Westinghouse Electric Corporation • 3332

CKT ~~12~~

PANELBOARD DRAWING

ENGR SR

DATE 3/3/81

L.A.A.C.

SHEET 11

BSL E03

ORIGINAL 3.6.1-14

CP11-9 S-R Field to S-R Denver 3-10-81

RETURN TO S-R FIELD

Stearns-Roger
ENGINEERING CORPORATION

March 10, 1981
C-21700 CP11-9

Stearns-Roger
P.O. Box 5888
Denver, Co
80217

Attention: Gerry May

Subject: 10MWe Solar Pilot Plant
Distribution Panels
Plant Electrical Shop Drawings (Vendor Brochure) Review

Gentlemen:

The enclosed shop drawings are submitted for your review, comments and/or approval.

Please submit four (4) reviewed copies by return transmittal before March 23, 1981 to Stearns-Roger Engineering Corp., P.O. Box 131, Daggett, Ca 92327. The enclosed drawings are:

Contractor	Vendor	Dwg. No.	Title
CP11/Lord	West	Type W Jr. Group Control	MCC 6
CP11/Lord	West	Panel Board Dwg. LA-40687	PP-8

Also enclosed are S-R Field preliminary comments made and submitted back to T&B/Lord TO expedite expedite procurement of this equipment.

Very truly yours,

Lead Resident Engineer

TEO/LWN/lt

Enclosures (5 copies)

cc: CP11-9
transmittals

Westinghouse

Type W Jr. Group Control

Economical Method of
Grouping Combination
Starters, 600 Volts Maximum

Dimensions in Inches

Approximate only, do not use for construction purposes

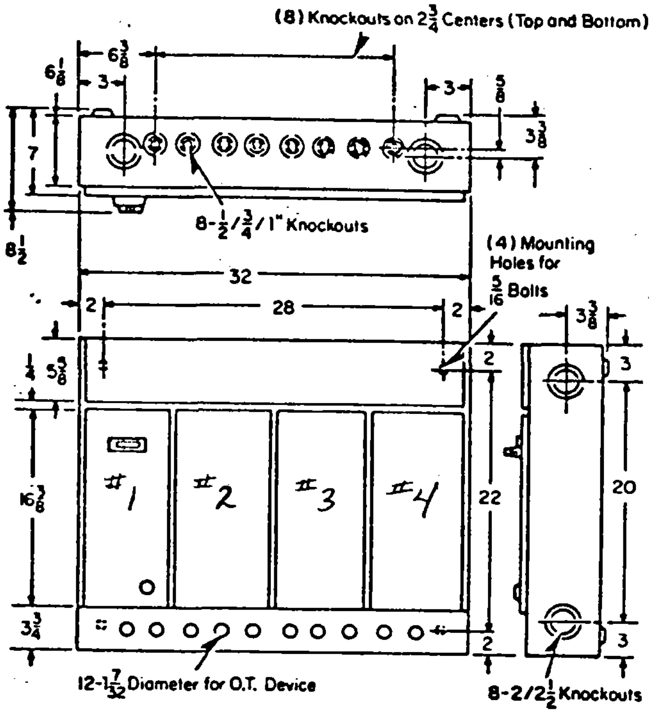

~~Regular Enclosure~~

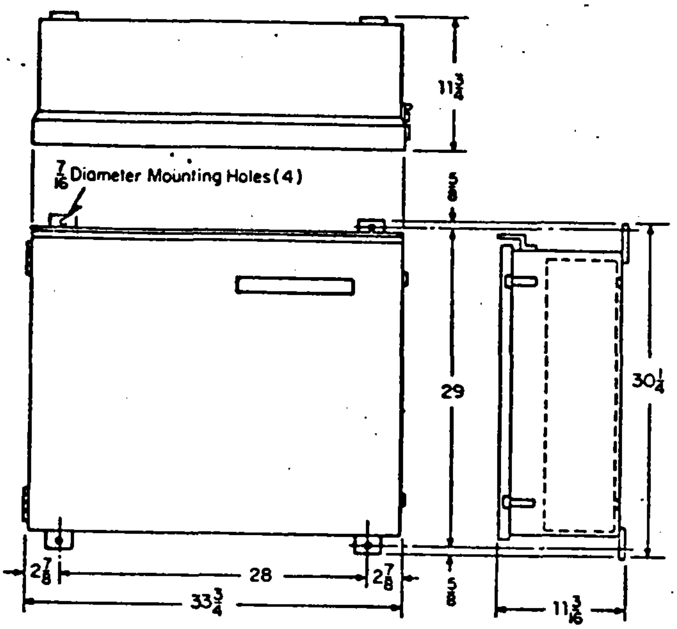

Dust and Weather Resistant Enclosure

NEMA 4

SECT	DEVICE
1	SIZE 1 STR W/ 100VA 480/120V CTX
2	SIZE 1 STR W/ 100VA 480/120 CTX
3	SIZE 1 STR W/ 100VA 480/120 CTX
4	1 - 30A FUSIBLE DISCONNECT
	ONE START/STOP PB FOR ENTIRE MCC

Further Information

Prices: Price List 12-121
Description: Descriptive Bulletin 12-151
Instructions: IL 12-140, 12-141, 12-142, 12-143
and 12-144

Customer LORD ELECTRIC / BRIGHTWAY Address

P.O. Number BRIGHTWAY PO# 0178090 Item 19. G.O. No. LA 40687

Job SOLAR PILOT PLANT Function

Apparatus TYPE (W) JR MCC - 6

Certified Date

Approval ☐
Reference ☒
Construction or Installation ☐
Other ☐

Westinghouse Electric Corporation
General Control Division, Chicago, Illinois 60632
Printed in USA

May, 1970
Supersedes DS 12-140, page 1 dated
February, 1968
E, D, C/1926/PL

DWG.

HT.

☐ COPPER BUS

(TOP)

☐ MAIN 1 # 8-1/0 TERM PER PHASE

☐ NEUTRAL # TERM

BA
3100

CKT. NO	FRAME	Poles	AMPS
1	BA	1	20
3			
5			
7			
9			
11			
13			
15			
17			
19			
21			
23			
25			
29			
31			
33			
35			
37			
39			
41			

FRAME	Poles	AMPS	CKT. NO
BA	3	20	2
			4
			6
			8
			10
			12
			14
			16
			18
			20
			22
			24
			26
			28
			30
			32
			34
			36
			38
			40
			42

H

SERVICE VOLTAGE 120/208 3 PHASE 4

100A MAIN BKR RATING

100A MAIN BUS RATING

100 NEUTRAL

U/L LABEL

CABINET MOUNTING ☒ Surface ☐ Flush

BOX SIZE 23 H. 20 W. 5 3/4

GUTTER Top. Bot. L.

BOX STYLE NO. Y20-23

TRIM STYLE NO. FFRX - 2023 S

AUX TRIM

☐ MTG PAN

☒ TRIM N.P. (1 X 2½)

☐ PANEL MTG. BKT.: S= 840A008G01

☐ PERM CKT #2419B40

☐ LOCKOFFS

☐

☐ GND BUS 840A697

☐ GND BUS SLA667

☐

○

○

○

QTY	BKRS/SW	S/M	QTY	BKRS/SW	S
6	BA 1020				
2	BA 3020				
1	BA 3100 MCB				

ITEM	QUAN.	MARKING	PANEL TYPE
18	1	PANEL PPB	B10B

☐ MAIN # TERM PER PHASE

☐ NEUTRAL 1 # 8-1/0 TERM

(BOTTOM)

Westinghouse Electric Corporation

CKT 12

PANELBOARD DRAWING

ENGR RR

DATE 2/26/81

LA 40687

SHEET

Stearns-Roger
ENGINEERING CORPORATION

Return to
S-R Field

June 12, 1981
C-21700 CP11-10

Townsend & Bottum
P O Box 366
Daggett, Ca
92327

Attention: John Abram, Construction Manager

Subject: 10MWe Solar Pilot Plant
Plant Electrical Shop Drawing Review
Distribution Panel PP9

Gentlemen:

The enclosed shop drawing (4 copies) is being returned after review, with comments noted.

Vendor	DWG. No.	CE File	Title	Rev. Stamp
Lord/Westinghouse	LA-40687	CP11-24	PP 9	S-R (all copies)

Note: The 1P-30A breaker is required to be a 2P-30A; formally revised by FDCR 172 E.

Very truly yours,

Lead Resident Engineer

TEO/LWN/1t

Enclosures (4 copies)

cc: CP11-10
transmittals

4500 CHERRY CREEK DRIVE • P.O. BOX 5888 • DENVER, COLORADO 80217 • PHONE (303) 758-1122 • TWX 910-931-0453 TELEX 045-540

REF. DWG.

PHL HT.

☐ COPPER BUS

STL

SHIP

(TOP)

☐ MAIN # TERM PER PHASE

☒ NEUTRAL 1 #12 - #1/0 TERM

SERVICE VOLTAGE 120/208 3 PHASE 4

70A MAIN BKR RATING

100 A MAIN BUS RATING

100A NEUTRAL

U/L LABEL

CABINET MOUNTING ☒ Surface ☐ Flush

BOX SIZE 36 H. 24 W. 6

GUTTER Top Bot. L

BOX STYLE NO. SPECIAL SUNBOX - CERRITOS

TRIM STYLE NO. SPECIAL SUNBOX - CERRITOS

AUX TRIM

☐ MTG PAN

☒ TRIM N.P. (1 X 2½)

☐ PANEL MTG. BKT.: S# 840A008G01

☐ PERM CKT #2419B40

☐ LOCKOFFS

☒ WEATHER PROOF

☐ GND BUS 840A697

☐ GND BUS SLA667

N

CKT. NO	FRAME	Poles	AMPS
1	BA	3	20
3			
5		↓	
7		/	
9			
11			
13			
15			
17			
19			
21			
23	↓	↓	↓
	BA 3070 MAIN		
31			
33			
35			
37			
39			
41			

FRAME	Poles	AMPS	CKT. NO
BA	3	15	2
			4
↓	↓	↓	6
BA	2	30	8
	↓	30	10
	/	15	12
		~~20~~ 15	14
		20	16
			18
			20
			22
↓	↓	↓	24
			26
			28
			30
			32
			34
			36
			38
			40
			42

Stearns-Roger

~~C21700 MAY 1 5 '80~~

S-R No. CP-11 File No. 24

QTY	BKRS/SW	S/M	QTY	BKRS/SW
1	BA 3070 MCB			
1	BA 3020			
1	BA 3015			
1	BA 2030			
2	BAB 1015			
15	BAB 1020			

14

☐ REVIEWED/NO COMMENTS
☒ REVIEWED/SEE COMMENTS
☐ REVISE PER COMMENTS & RESUBMIT FOR REVIEW
☐ SUBJECT TO TRANSMITTAL

ENG. DEPT. BY DATE JUN 1 1981

NEITHER REVIEW ... RELIEVES MANUFACTURER OF ... RESPONSIBILITY FOR COMPLIANCE WITH SPECIFICATIONS ... CONTRACT REQUIREMENTS.

RETURN TO

ON OR BEFORE

☐ MAIN 1 #14 - #4 TERM PER PHASE

☐ NEUTRAL # TERM

(BOTTOM)

ITEM	QUAN.	MARKING	PANEL TYPE
20	1	PANEL PP9	B10B

RECEIVED MAY 7 1981

Westinghouse Electric Corporation

PANELBOARD DRAWING

ENGR. PR

DATE 5/4/81

LA 10687

CK. 24

SHEET

3.6.1-19

3.7 CABLES

Equipment Number	Description	Maintenance Section	P&ID Dwg. Number
CFS 0004	5000v Shielded Metal Clad Power Cable	3.7.1	
CFS 0005	600v Metal Clad Power Cable	3.7.2	
CFS 0006	Coaxial Cable	3.7.3	
OCS 0900	Cable - 30 ft.	3.7.4	
OCS 1000 thru 1003	Cable - I/O to ft.	3.7.5	
OCS 1100	Cable - 30 ft.	3.7.6	
OCS 1101	Cable - 30 ft.	3.7.6	
OCS 1200 thru 1205	Cable - Async to Sync	3.7.7	

3.8 LIGHTING

Equipment Number	Description	Maintenance Section
--	High Intensity Obstruction Lighting System	3.8.1
--	Emergency Lighting Central AC System	3.8.2
--	Miscellaneous Lighting Fixtures	3.8.3

3.8 LIGHTING

3.8.1 High Intensity Obstruction Lighting System

3.8.1.1 Identification

Identification	Description
Tag Number None	Aircraft Warning Lights

3.8.1.2 Description

Manufacturer:	Flash Technology Corp; NASHUA, New Hampshire
Part Number:	FTB-205 Type A
Spec. No:	FAA/DOD Spec. No. L-856
Material:	SS304 NEMA 4
Weight:	N/A

3.8.1.3 Prescribed Service

Aircraft warning system

3.8.1.4 Vendor

Flash Technology Corp of America

3.8.1.5 Special Cautions

See Flash Technology Instr. Manual (following)

3.8.1.6 Periodic Service

See Flash Technology Instr. Manual (following)

3.8.1.7 Parts List

See Flash Technology Instr. Manual (following)

3.8.1.8 Special Tools

None

3.8.1.9 Maintenance Instructions

See Flash Technology Instr. Manual (following)

3.8.1.10 Acceptance Tests

®

INSTRUCTION MANUAL

High Intensity Obstruction Lighting System
FTB-205 Type A
FAA/DOD Specification No. L-856

RECEIVED
FEB 26 1981
TOWNSEND & BOTTUM INC.

Daggett, CA
72-2079

FLASH TECHNOLOGY CORPORATION of AMERICA

55 LAKE STREET
NASHUA, NEW HAMPSHIRE 03060
TEL. 603/883-6500
TELEX 943-481

SYSTEM INSTRUCTIONS

FTB-205A BEACON SYSTEM

INSTRUCTION MANUAL

CONTENTS

Front Matter	Page No.
PREFACE	A-1
SAFETY NOTICE	A-3
WARRANTY	A-4

Modular Breakdown	Type No. *
SYSTEM INSTRUCTIONS	FTB- 205A
CONTROLLER INSTRUCTIONS	SC-105/SC-105R
LIGHTING CONTROL INSTRUCTIONS	PEC-405
BEACON INSTRUCTIONS	FTB-205-1A

*See top outside corner of instructions' pages for Type No.

PREFACE

Owner: Christoff Company FTCA Sales Order: 72-2079

Site: Daggett Location: California

This instruction manual contains system-level and unit-level instructions for your ElectroFlash FTB-205A Beacon System, an FAA L-856 type A High Intensity Obstruction Lighting System. The following lists identify the ElectroFlash units, variable assemblies, options, and accessories that make up your FTB-205A System.

UNITS

Quantity	Designation		Input Power
1	SC-105	System Controller	120 Vac
2	PEC-405	Photoelectric Lighting Control	120 Vac
4	FTB-205-1A	Coruscating Beacon	120 Vac
	FTB-	AOL Beacon	---
	FTB-	AOL Power Converter	Vac
	FTB-	Aviation Obstruction Beacon	Vac
	FTB-	Optical Link Upper Vac	Lower Vac

VARIABLE ASSEMBLIES

The FTB-205A System contains variable assemblies to accommodate different applications. Specific assemblies installed in your system are:

System Controller

Controller board assembly	P/N 2600-02

Coruscating Beacons

High-voltage rectifier board assembly	P/N 2480
Timing and trigger board assembly	P/N 2723-02

AOL Power Converter

High-voltage rectifier board assembly	P/N
Timing and trigger board assembly	P/N

Aviation Obstruction Beacon

High-voltage rectifier board assembly	P/N
Timing and trigger board assembly	P/N

SAFETY NOTICE

This equipment employs voltages which are dangerous and may be fatal if contacted by operating personnel. Extreme caution should be exercised when working with the equipment. While every practicable safety precaution has been incorporated into this equipment, the following rules must be strictly observed:

KEEP AWAY FROM LIVE CIRCUITS

Operating and maintenance personnel must at all times observe all the safety regulations. Do not change plug-in components or make adjustments inside the equipment with the ac power on. Under certain conditions, dangerous potentials may exist in circuits with power controls in the off position due to charges retained by capacitors. To avoid casualties — always turn off the ac power input, wait for energy storage capacitors to discharge, and then check with a meter for residual charges (refer to Paragraph 5.2.2 of Beacon Instructions).

DON'T TAMPER WITH INTERLOCKS

Do not depend upon door switches or interlocks but always turn off the ac power input for your protection. Under no circumstances should any access gate, door, or safety interlock switch be removed, short-circuited, or tampered with in any way, except by authorized maintenance personnel when considered unavoidable, nor should reliance be placed upon the interlock switches for removing voltages from the equipment.

WARRANTY
No. 80/8062

Except as hereinafter provided, Flash Technology Corporation of America (FTCA) warrants that the equipment and materials delivered hereunder conform to specifications and other descriptions agreed in writing to be applicable. With respect to equipment and materials which are not produced by FTCA including but not limited to installation kits and electrical apparatus, the manufacturer's warranty shall be extended to the Owner to the extent applicable and no other warranty shall apply. With respect to equipment and materials which are produced by FTCA, unless specifically stated differently in the body of our offer to sell, FTCA warrants such equipment and materials to be free from defects for a period of two years from the date of shipment from FTCA. The responsibility of FTCA hereunder is limited to repairing or replacing at its plant, without charge, any article or part which has been returned, freight prepaid, to FTCA and which is defective or does not conform to such specifications or other descriptions; provided, however: (a) that FTCA must be notified in writing within the above stated warranty period and (b) the affected article or part is returned within thirty (30) days after authorization. THERE ARE NO WARRANTIES, EXPRESS OR IMPLIED, WHICH EXTEND BEYOND THOSE SPECIFICALLY SET FORTH HEREIN. FTCA shall have no responsibility for any defects or damage caused by improper storage or installation, misuse, neglect, accident, or Act of God, or for any article or part which has been repaired or altered by anyone other than FTCA or its authorized service representative. In no event shall FTCA be responsible for collateral, incidental or consequential damages or charges. No agreement or understanding affecting this warranty shall be binding upon FTCA unless in writing and signed by a duly authorized representative.

This warranty applies only if the items are used solely under the operating conditions and in the manner recommended in this instruction manual.

FTB-205A BEACON SYSTEM
SYSTEM INSTRUCTIONS

TABLE OF CONTENTS

		Page
SECTION 1	GENERAL DESCRIPTION	
1.1	Introduction	1-1
1.2	System Functions	1-1
1.3	System Specifications	1-5
SECTION 2	INSTALLATION	
2.1	System Layout	2-1
2.2	Interconnection Wiring	2-4
2.3	Pre-Operational Inspection	2-7
SECTION 3	OPERATION	
3.1	Operating Procedure	3-1
3.2	Monitoring Procedure	3-1

LIST OF FIGURES

Figure		Page
1-1	Standard and Optional Units of FTB-205A Beacon System	1-2
1-2	Block Diagram of Typical FTB-205A System	1-3
2-1	System Installation Form	2-2
2-2	FTB-205A Wiring Connections Between Standard Units	2-5

SECTION 1

GENERAL DESCRIPTION

1.1 INTRODUCTION

These instructions contain system-level information for understanding, installing, and operating the ElectroFlash FTB-205A Beacon System. The FTB-205A System is designed and manufactured by the Flash Technology Corporation of America as a white, high-intensity flashing-light system for obstruction warning. Typical applications are the day, twilight, and night lighting for tall structures, such as chimneys and towers, that present a potential hazard to air navigation.

The FTB-205A System is approved by the Federal Aviation Administration for use as a Type A system in L-856 (FAA) high-intensity obstruction lighting applications. For these applications, the FTB-205A System will comply with the equipment specifications of FAA Advisory Circular 150/5345-43B.

Standard units that make up an FTB-205A System are the Coruscating Beacons, a System Controller, and two Photoelectric Lighting Controls (see Figure 1-1). Optional units include the alternative use of two different rack-mounted System Controllers, and the addition of an Antenna Obstruction Light (for TV towers) or an Optical Link (for AM towers) or both. Each of the system units is described in detail in the individual instructions that follow in this Instruction Manual. The quantity of Coruscating Beacons required for an installation depends upon the type and number of structures to be lighted in accord- with FAA Advisory Circular 70/7460-1F. Refer to the Preface of this Instruction Manual for a listing of the equipment supplied and any options included for your particular installation.

1.2 SYSTEM FUNCTIONS

Figure 1-2 shows the functional relationships of units in an FTB-205A Beacon System.

1.2.1 Coruscating Beacons

The Coruscating Beacons employ capacitor-storage, xenon-discharge technology to produce white, high-intensity flashing light. An integral power supply within each Coruscating Beacon converts the ac input power to high-voltage dc power for energizing the flashtube.

Coruscating Beacons are mounted in tiers as required on the structure needing obstruction lighting. The number of tier levels required depends on the overall height of the structure above the ground. The number of Coruscating Beacons required per tier level depends on the structure's effective diameter at that level. Skeletal structures need

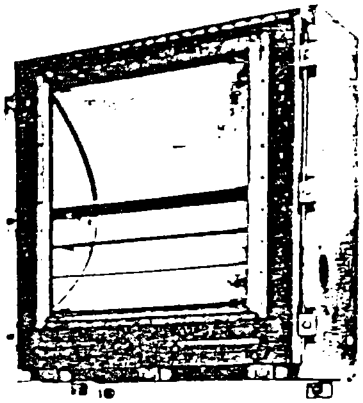

FTB-205-1A CORUSCATING BEACON
(quantity as needed)

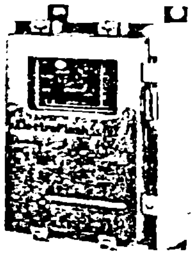

SC-105 SYSTEM CONTROLLER

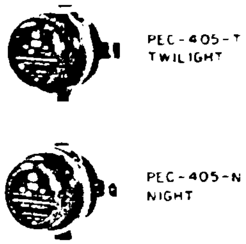

PHOTOELECTRIC
LIGHTING CONTROLS

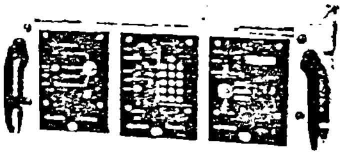

SC-205 SYSTEM CONTROLLER
(optional)

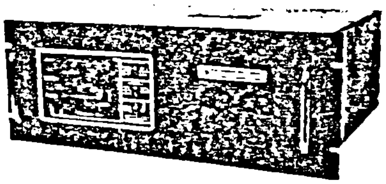

SC-105R SYSTEM CONTROLLER
(optional)

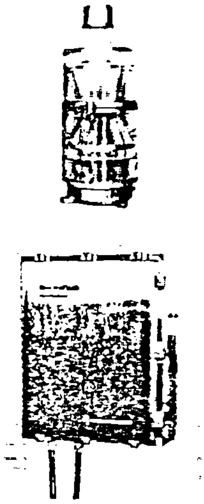

FTB-300 ANTENNA
OBSTRUCTION LIGHT
(optional)

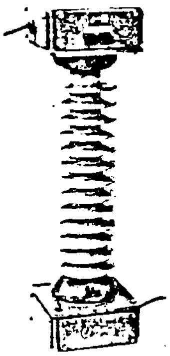

FTB-205-OL OPTICAL LINK
(optional)
ISOLATION TRANSFORMER
AND RF FILTERS NOT SHOWN

Figure 1-1. Standard and Optional Units of FTB-205A Beacon System

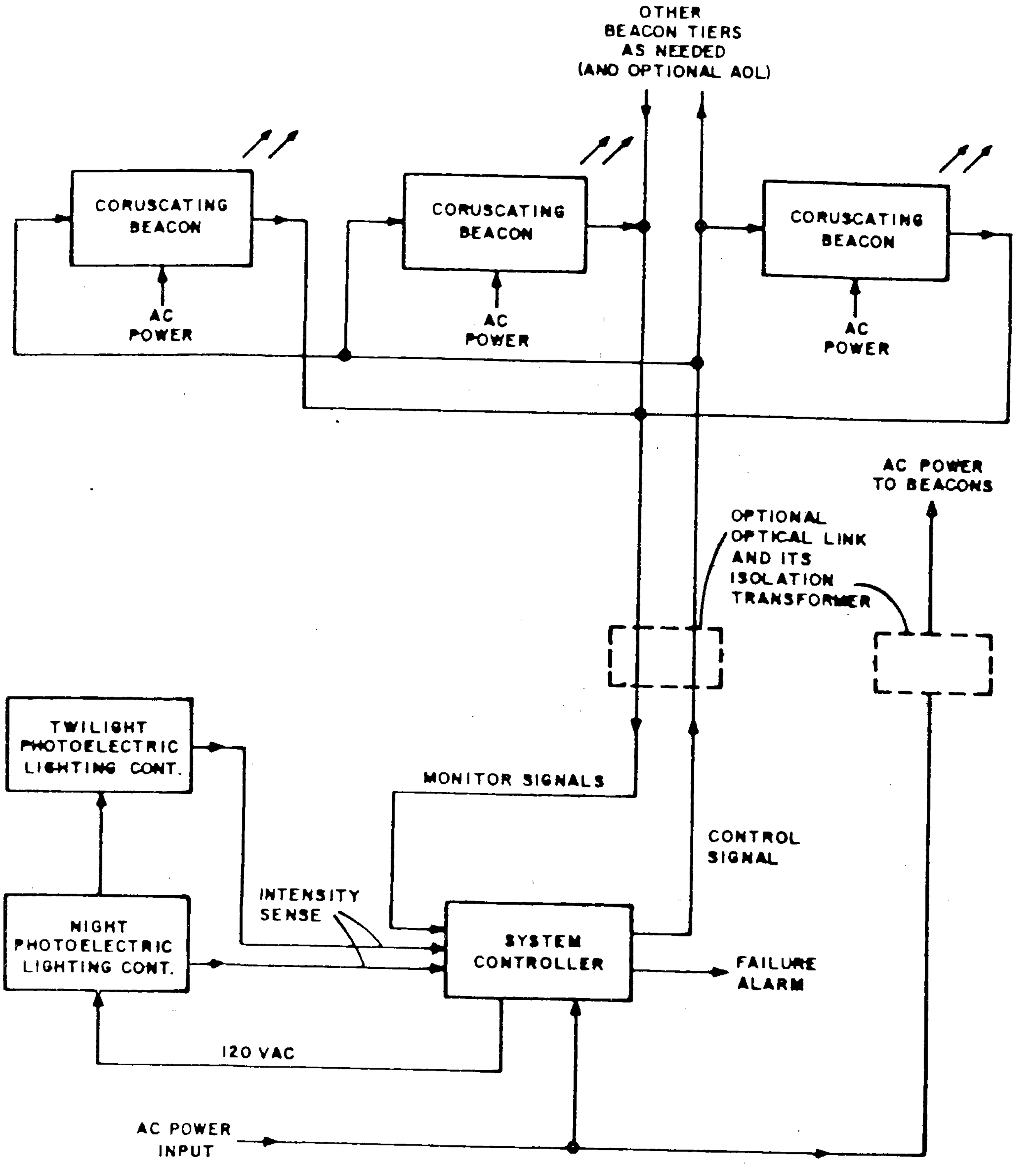

Figure 1-2. Block Diagram of Typical FTB-205A System

three Coruscating Beacons normally at each tier level to provide a full horizontal coverage of 360 degrees of flashing light. Wide structures need four or more Coruscating Beacons per tier level.

1.2.2 System Controller

The System Controller functions from a convenient operating point to control and monitor the operation of the Coruscating Beacons. Interconnections between the System Controller and its Coruscating Beacons utilize digital signals to simplify the wiring as paralleled signal connections at the Coruscating Beacons. One wire transmits the digitally encoded control signal to the Coruscating Beacons so they all flash in synchronism and at the proper intensity.

A second wire transmits the monitor signal from each Coruscating Beacon in a time shared format. At the System Controller, the monitor signals are processed so the flashing status of each Coruscating Beacon can be monitored. A failure alarm output of the System Controller is provided for external connection (if desired) to a remote station alarm and/or an annunciator system. This alarm output changes state (SPDT relay contacts switch state) if a Coruscating Beacon fails or the ac input power fails.

1.2.3 Photoelectric Lighting Controls

Two Photoelectric Lighting Controls sense the sky illumination to initiate automatic control for step changing of the flashing intensity of the Coruscating Beacons. Three intensity modes (encoded on the control signal) provide three appropriate levels of flashing light for day, twilight, and night operation.

1.2.4 Fail-Safe Functions

Fail-safe features are incorporated into the FTB-205A System. Failure of any Coruscating Beacon does not affect the operation of other Coruscating Beacons. The Coruscating Beacons continue to operate if the System Controller fails. With a loss of synchronization information, the Coruscating Beacons continue to flash but not in synchronism. With a loss of intensity mode information, the Coruscating Beacons flash at the high intensity (day) mode.

1.2.5 Optional Units

If an Antenna Obstruction Light (AOL) is included, it connects to the FTB-205A System as does a Coruscating Beacon. This optional unit produces a white flashing light to signal the top of a television antenna or similar appurtenance, completing the obstruction warning requirements for certain structures.

If an Optical Link is included, it provides two-way optical coupling for the control and monitor signals. This optional unit couples the digital signals between the System Controller and the tower-mounted Coruscating Beacons where the tower cannot be grounded. An Optical Link installation needs a high-voltage RF isolation transformer to supply ac power to the tower-mounted ElectroFlash equipment plus RF compensation filters at key junction-box locations.

1.3 SYSTEM SPECIFICATIONS

1.3.1 General Features

- Automatic day/twilight/night intensity control — manual override
- Automatic monitoring of flashing status of each Coruscating Beacon
- Control and monitor capability for up to 24 Coruscating Beacons in a system (up to 28 with optional SC-205A System Controller)
- Failure alarm output (relay SPDT contacts) available to activate remote alarm and annunciator systems
- A single, two-wire shielded control-and-monitor cable for simplified wiring on structure
- Solid-state electronic control circuits
- Modular design for ease of servicing
- High-gain optical system that results in a high-intensity light output while minimizing the electrical power input
- Internally mounted louvers in optics for ground shadowing
- Extended flash duration at night by a burst of rapid flicks that form a longer apparent flash duration, permitting spatial recognition by the observer where black backgrounds exist
- Alternate types of System Controllers available for either indoor or outdoor installation
- Accommodates optional addition of Antenna Obstruction Light for television antennas or similar appurtenances
- Compatible with optional addition of Optical Link for antenna structures electrically insulated from ground

1.3.2 Light Output

- High-intensity white flashing light (xenon gas emission)
- 200,000 effective candelas minimum per flash during the day
- 20,000 nominal effective candelas per flash during the twilight
- 4,000 nominal effective candelas per flash during the night
- Simultaneous flashing of all Coruscating Beacons in system at 40 flashes per minute
- Directional flashing-beam profile
  - 3 degrees vertical beam spread with sharp cutoff of downward radiation
  - 120 degrees horizontal beam spread; three or more Coruscating Beacons provide 360 degrees horizontal coverage
- Beam elevation-angle indicator in each Coruscating Beacon to facilitate adjustable alignment of vertical beam-spread peak from -2 to +8 degrees with respect to horizontal

1.3.3 Electrical Input Power

- 480 volts, 60 Hz, single phase — standard
  120, 208, or 240 volts, 60 Hz — optional
  120, 230, 240, 380, or 480 volts, 50 Hz — optional
- 50 watts for System Controller
- 190 watts average per Coruscating Beacon, 380 voltamperes average, 600 voltamperes peak

1.3.4 Mechanical Characteristics

- Outdoor enclosures are weathertight NEMA 4 type
  stainless steel 304 — standard
  stainless steel 304L or 316L — optional
- Dimensions and weights — refer to individual instructions for each unit

1.3.5 Outdoor Environmental Qualification

- Wind velocities up to 150 miles (240 km) per hour
- Temperature range from -50°C to +55°C
- Humidity range up to 95 percent
- Exposure to driving rains

SECTION 2

INSTALLATION

This section contains general guidelines for the placement and interconnection of units within an FTB-205A System. Refer to the individual instructions of each unit for mounting details and outline dimensions.

2.1 SYSTEM LAYOUT

2.1.1 System Layout Drawing

Detailed installation requirements should be specified on a system layout drawing normally not supplied by FTCA but by others. This drawing should specify the location of each unit in the system, the electrical conduit plans, and a list of materials. Inspect the system layout drawing to make sure that it includes conduit and/or wiring provisions for any options that require additional interconnection wiring.

2.1.2 Coruscating Beacon Placement

The Coruscating Beacons must be located on tier levels of the structure in accordance with FAA Advisory Circular 70/7460-1F. For your installation, the specified Coruscating Beacons are shipped as pre-programmed units for a particular location on the structure. This pre-programming enables the System Controller to identify each Coruscating Beacon in the monitoring function. Each Coruscating Beacon is assigned a "Beacon-Tier" designation.

The System Installation Form, Figure 2-1, is the guide to identify a Coruscating Beacon location. The lowest tier on the structure is usually designated Tier 1. The Coruscating Beacon in each tier that is installed nearest to true North is arbitrarily designated Beacon 1, with higher numbered Beacons progressing through the easterly, southerly, and westerly directions.

Upon installation, complete the System Installation Form, recording the serial numbers of the system units as well as the azimuth and the elevation angle for each Coruscating Beacon. The structure location, tier heights, and the characteristics of the site and its surroundings will dictate primarily the elevation angle of the Coruscating Beacons at each tier. Unless otherwise specified by FAA requirements, or restricted by local terrain features, the Coruscating Beacons should be adjusted as follows:

Tier Level (above ground level)	Elevation Angle
0 feet to 300 feet (91 meters)	+3 degrees
300 feet to 400 feet (122 meters)	+2 degrees
400 feet to 500 feet (152 meters)	+1 degree
500 feet and higher	0 degrees

TIER NO.	CORUSCATING BEACON				CORUSCATING BEACON SERIAL NO.	AZIMUTH	ELEVATION ANGLE	NOTES
	POS.	NO.	POS.	NO.				
6	N	1	N	1				
	E	2	ESE	2				
	S	3	WSW	3				
	W	4						
5	N	1	N	1				
	E	2	ESE	2				
	S	3	WSW	3				
	W	4						
4	N	1	N	1				
	E	2	ESE	2				
	S	3	WSW	3				
	W	4						
3	N	1	N	1				
	E	2	ESE	2				
	S	3	WSW	3				
	W	4						
2	N	1	N	1				
	E	2	ESE	2				
	S	3	WSW	3				
	W	4						
1	N	1	N	1				
	E	2	ESE	2				
	S	3	WSW	3				
	W	4						

SYSTEM CONTROLLER SERIAL NO. ____________________

STRUCTURE TYPE ____________________ HEIGHT ABOVE GROUND ____________________

LOCATION ____________________ HEIGHT ABOVE SEA LEVEL ____________________

OWNER ____________________

INSTALLING ELECTRICAL CONTRACTOR ____________________

DATE OF OPERATION ____________________

Figure 2-1. System Installation Form

2.1.3 System Controller Placement

A System Controller intended for outdoor installation may be mounted at the base of the structure with the Coruscating Beacons, either inside or outside an access area (enclosure door can be padlocked), or in a remotely located control area. A System Controller intended for indoor installation (rack mounted type) should be located in an area with a secured entry that prevents access by unauthorized personnel.

No power switch is provided on the System Controller so placement near the system main-disconnect switch is recommended. Since low-voltage signal interconnections are used, the System Controller can be placed at some distance from the Coruscating Beacons (up to 2500 feet, or 762 meters) at a convenient location for the system operator.

2.1.4 Lighting Controls Placement

The Photoelectric Lighting Controls should be located in the vicinity (within 500 feet, or 152 meters) of the System Controller at a location with an open view of the polar sky (for example, on a roof or partially up the side of the structure). To ensure proper operation, the Photoelectric Lighting Controls should be mounted so their photocells will:

1. Face away from the sun with an unobstructed view of the sky (point between northeast and northwest in northern hemisphere; point between southwest and southeast in southern hemisphere)
2. Not be subjected to direct or strongly reflected sun rays
3. Not be exposed to artificial light (either direct or backscattered) with a level near that of the nominal sensitivity of the control (where such a light exists, shield the control so it will see only the natural light).

2.1.5 Antenna Obstruction Light Placement

Inclusion of the optional Antenna Obstruction Light in the FTB-205A System involves the addition of two assemblies. The AOL Beacon is installed atop the antenna, or atop an adjacent mast if the antenna is incapable of supporting the AOL Beacon (refer to FAA Advisory Circular 70/7460-1F for applicable requirements). The AOL Power Converter is installed at the top of the supporting structure near the base of the antenna, at the top tier level of the FTB-205A Coruscating Beacons.

Locate the AOL Power Converter below any active antenna radiators to permit servicing while the radio station is transmitting. Wiring conductors (preassembled to an FTB-300 AOL Beacon) are supplied to specified length for interconnecting the AOL Beacon and the AOL Power Converter. Provide environmental protection for these conductors by running inside the antenna mast or a conduit. Also, secure the conductors at the mast or conduit ends to prevent chafing, and support vertical runs of the conductors every 100 feet (30 meters) or less to prevent insulation deformation and breakdown.

2.1.6 Optical Link Placement

The optional Optical Link is generally mounted on a pipe that is cast in a concrete pad for the tower's base insulator. The Optical Link should be located next to the base insulator. Also, provisions should be included in the concrete pad for mounting the high-voltage RF isolation transformer required to supply ac power to the tower-mounted ElectroFlash equipment.

2.2 INTERCONNECTION WIRING

2.2.1 System Wiring Diagram

Detailed wiring interconnections should be specified on the system wiring diagram (generally furnished by others). Figure 2-2 is an example of the wiring interconnections in an FTB-205A System with standard units. The electrical conduit materials and interconnection wiring are supplied by others. To comply for FTCA warranty, the electrical installation must conform to regulations of the National Electric Code as a minimum.

2.2.2 Wiring Recommendations

For the control and monitor cable, a shielded twisted-pair cable with No. 16 AWG wires or larger is recommended. A vinyl jacketed cable (Belden No. 8719, or equivalent) may be used for installations where the cable will not be buried underground or subject to water immersion. The cable should be abrasion and ozone resistant.

The size and type of power conductors will depend upon the voltage of the ac input power, the run length, and the number of Coruscating Beacons and tier levels in the system. Inspect the system wiring diagram and make sure that the proposed wiring is adequate. Use 600 voltamperes per Coruscating Beacon for calculations of line-transformer and circuit-breaker (or fuse) ratings. Use 380 voltamperes per Coruscating Beacon for calculations on wire size. All power conductors must be abrasion and ozone resistant.

All conductor splices must be mechanically and electrically sound, insulated to at least 600 volts ac, and covered with abrasion resistant covering. Spliced connections must be left pointing upward and contained in a rain-tight enclosure complete with provisions for moisture drainage.

If an Optical Link is included in the system, RF compensation filters must be installed in the conduit junction box at each tier level, at the top and bottom of the Optical Link, and at the System Controller. These filters are connected to the power and signal wires to compensate for differences in RF propagation throughout the structure.

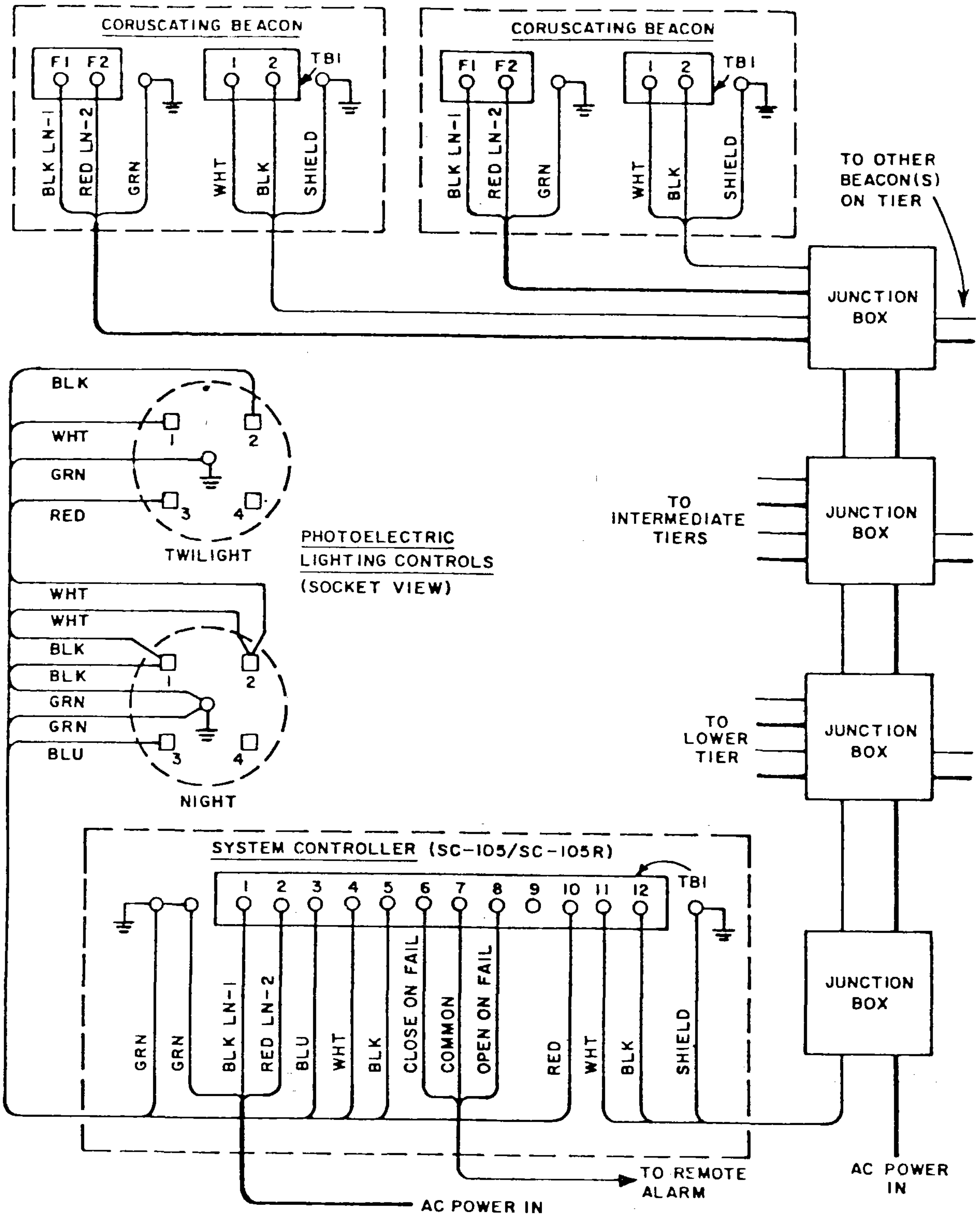

Figure 2-2. FTB-205A Wiring Connections Between Standard Units

2.2.3 Power Conductor Phasing

Power interconnections between the Coruscating Beacons and the System Controller must be phased properly to maintain flashing-light intensity and synchronization.

For connection to a single-phase power source, all LINE-2 (fuse F2) terminals at the ac input to the Coruscating Beacons (and TB8-3 of optional AOL) must be connected to the same feeder conductor. In addition, the ac input at terminal TB1-2 of the System Controller (pin A of POWER connector in optional SC-205A) must be connected to the same feeder conductor as the LINE-2 terminals of the Coruscating Beacons.

For connection to a three-phase power source with the phase rotating around feeder conductors A, B, and C, distribute the single-phase loading of the Coruscating Beacons as follows:

LINE-1 to A B A
and and
LINE-2 to B C C

Connect the System Controller as follows:

TB-1 to A B A
or or
TB-2 to B C C

The A-C connection for the System Controller is preferred.

2.2.4 Conduit Recommendations

For 480-volt powered systems, the typical case, 3/4-inch galvanized rigid conduit is recommended for the riser up the structure and for ground unit interconnections. For convenience when installing, aiming, and servicing, 3/4-inch flexible liquid-tight conduit (Anaconda "Sealtite" Type UA, or equivalent) must be used for branch wiring of the Coruscating Beacons at each tier level. The flexible conduit branches should be long enough so each Coruscating Beacon can be pivoted or turned to the servicing position without stressing the conduit. When using flexible conduit, an additional wire conductor is needed for grounding. Other electrical materials include a junction box at each tier level, rigid-conduit expansion joints, breathers, drains, and support boxes with wire grips at intervals up the conduit riser as required to support the internal wires (refer to the National Electric Code).

The layout of the conduit system must permit the drainage of any water that might happen to get into it. All rigid and flexible conduit on horizontal runs must have a positive incline to prevent the collection of water. All interconnecting boxes in the conduit riser must allow water drainage downward through a drain outlet at the bottom of the riser. Every low point that could collect water must have an immediate drain.

As an alternative to conduit wiring, certain local regulations may allow the use of aluminum sheath (ALS) cable. One 6-conductor ALS cable can be configured (Okonite OKOCLAD ALS 515-31-7037, or equivalent) to handle the power and signal wiring in short runs (up to about 300 feet, or 91 meters). Otherwise, use two separate 3-conductor ALS cables, one for power wiring and one for signal wiring, in longer wire runs. Watertight fittings are needed for this type of cable as well as special cable terminators for grounding the sheath to conduit boxes.

2.2.5 Lightning Protection

A lightning arrestor system must be installed (even if temporary) and wired to its ground grid before installation of the FTB-205A System. During the FTB-205A installation, all Coruscating Beacon enclosures (including optional Antenna Obstruction Light), the conduit riser, and any ALS junction boxes must be tied to the lightning arrestor system, otherwise the FTCA warranty will not be valid.

2.3 PRE-OPERATIONAL INSPECTION

After installation of the FTB-205A System and before ac power is applied, the system should be inspected by qualified personnel to determine that each system unit was installed properly and that the overall system is ready for operation. This inspection checks the following:

Coruscating Beacons

1. Inspect each unit for damage that might have occurred during transit.
2. Check each unit for proper Beacon-Tier location as pre-programmed for the system.
3. Check that phasing of ac power input connections at all units is correct.
4. Check that control and monitor cable interconnections of each unit are correct.
5. Check each interlock switch by rotating its shaft to determine that shaft is not bent.
6. Check that each unit enclosure door is shut and secured properly.
7. Check that elevation angle of each unit is set correctly.

Antenna Obstruction Light (optional unit)

1. Inspect AOL Beacon and AOL Power Converter for damage that might have occurred during transit.
2. Check operation of AOL Beacon on ground before installation if possible.

3. Check that AOL Power Converter was pre-programmed to confirm at the proper Beacon-Tier location.
4. Check that phasing of ac power input connections at AOL Power Converter is correct.
5. Check that control and monitor cable interconnections at AOL Power Converter are correct.
6. Check each interlock switch by rotating its shaft to determine that shaft is not bent.
7. Check that enclosure door of AOL Power Converter is shut and secured properly.

Optical Link (optional unit)

1. Inspect unit for damage that might have occurred during transit.
2. Check that ac power connections at top and bottom of unit and at high-voltage RF isolation transformer are wired for appropriate voltage(s).
3. Check that two-way control-and-monitor cable signal connections are correct.
4. Check that EMI filters are installed and wired properly.

System Controller

1. Inspect Unit for damage that might have occurred during transit.
2. Check that phasing of ac power input connections is correct.
3. Check that control and monitor cable interconnections are correct.
4. Check that Photoelectric Lighting Control interconnections are correct at the System Controller and at the Photoelectric Lighting Controls.
5. Check that Twilight and Night photoelectric head assemblies are installed in the correct meter sockets and aimed properly toward the polar sky.

System

1. Check that lightning arrestor system and FTB-205A System are properly connected for lightning protection.
2. Check that conduit run has adequate provisions for moisture drainage.
3. Check that voltage of ac power source is correct for application to all units.
4. Operate system and perform System Checkout Procedure as outlined in Controller Instructions.
5. Set up System Controller for normal (automatic) operation.
6. Close and secure the enclosure door of the System Controller (outdoor unit).

SECTION 3

OPERATION

3.1 OPERATING PROCEDURE

After the pre-operational inspection (see Paragraph 2.3) and the power turn-on at the system's main disconnect switch, the normal operation of the FTB-205A System becomes automatic. All switches and indicators for manual control of the system are located on the System Controller. Refer to the Controller Instructions of this manual for detailed operating procedures.

If the FTB-205A installation happens to be located near a similar FTCA flashing system, you can use the flash delay feature of the System Controller to synchronize the FTB-205A with the neighboring system if desired.

3.2 MONITORING PROCEDURE

Monitor the flashing operation of the Coruscating Beacons at the System Controller as needed to confirm normal operation or to identify a faulty Coruscating Beacon. If the System Controller incorporates the manual reset feature, the failure alarm output will remain activated until a fault is cleared and the System Controller is manually reset. This feature ensures that the operating personnel will be aware of each Coruscating Beacon and power failure even though the fault may clear itself.

CONTROLLER INSTRUCTIONS

SC-105/SC-105R SYSTEM CONTROLLER
CONTROLLER INSTRUCTIONS

TABLE OF CONTENTS

	Page
SECTION 1 GENERAL INFORMATION	
1.1 Introduction	1-1
1.2 Physical Description	1-1
1.3 Specifications	1-1
1.4 Options	1-3
SECTION 2 INSTALLATION	
2.1 Layout and Mounting	2-1
2.2 Interconnection Wiring	2-1
2.3 Flash Rate Programming	2-5
2.4 Beacon-Tier Programming	2-5
SECTION 3 OPERATION	
3.1 Controls and Indicators	3-1
3.2 System Checkout Procedure	3-1
3.3 Normal Operating Procedure	3-3
3.4 Special Operating Procedure	3-4
SECTION 4 PRINCIPLES OF OPERATION	
4.1 Overall Description	4-1
4.2 Control Signal Circuit	4-3
4.3 Monitor Signal Circuit	4-5
SECTION 5 MAINTENANCE	
5.1 Preventive Maintenance	5-1
5.2 Troubleshooting	5-1
5.3 Parts Replacement	5-1
5.4 Drawings	5-5
SECTION 6 PARTS LISTS	
6.1 Recommended Spare Parts	6-1
6.2 Electrical Replaceable Parts	6-2
SECTION 7 SUPPLEMENTARY DATA	7-1

10035700

LIST OF FIGURES

Figure		Page
1-1	SC-105 and SC-105R System Controllers	1-2
2-1	Outline Drawing of SC-105	2-2
2-2	Outline Drawing of SC-105R	2-3
2-3	Wiring Terminations at Terminal Block TB1	2-4
2-4	Component-Side View of Controller Board	2-6
3-1	Operating Controls and Indicators	3-2
4-1	Block Diagram of System Controller	4-2
4-2	Block Diagram of Control Signal Circuit	4-4
4-3	Block Diagram of Monitor Signal Circuit	4-7
5-1	Rear View of SC-105 Front Panel Assembly	5-6
5-2	Front View of SC-105 Rear Panel Assembly	5-7
5-3	Interior View of SC-105R	5-8
5-4	SC-105/SC-105R System Controller, Wiring Diagram	5-9
5-5	2600 Series Controller Board, Schematic Diagram	5-11
5-6	SC-105/SC-105R System Controller, Timing Diagram	5-13

LIST OF TABLES

Table		Page
5-1	System Controller Troubleshooting Chart	5-2

SAFETY PRECAUTIONS

The SC-105 or SC-105R System Controller employs ac power voltages which are dangerous and may be fatal if contacted. No safety interlocks are provided. Do not operate the System Controller if the input power terminals are uncovered or exposed.

Before attempting access within the System Controller, disconnect the ac input power.

SECTION 1

GENERAL INFORMATION

1.1 INTRODUCTION

These instructions contain information for understanding, installing, operating, and maintaining the ElectroFlash SC-105 or SC-105R System Controller. The SC-105 and SC-105R are products of the Flash Technology Corporation of America.

An SC-105 or SC-105R System Controller is the control unit of FAA approved ElectroFlash Beacon Systems for L-856 high-intensity obstruction lighting applications in accordance with FAA Advisory Circular 150/5345-43. The SC-105 or SC-105R controls and monitors the flashing operation of ElectroFlash Beacons installed on a tall structure that presents a potential hazard to air navigation.

1.2 PHYSICAL DESCRIPTION

The SC-105 and SC-105R System Controllers use two different types of enclosures for housing the functional unit. Both System Controllers have equivalent electronic circuits and identical layouts of operating controls and indicators.

Figure 1-1 shows both types of System Controllers. The SC-105 unit is housed in a NEMA 4 enclosure for outdoor installations. In this unit, operating controls and indicators as well as power and system interconnections are located at the front. The SC-105R unit is housed in a rack mounted enclosure for indoor installations. In this unit, operating controls and indicators are located at the front; power and system interconnections are located at the rear.

Since the SC-105 and SC-105R units are so similar, the instructions in this document for the SC-105 also apply to the SC-105R except where specific differences are noted.

1.3 SPECIFICATIONS

1.3.1 Control Features

- Single-wire control signal to all Beacons in system (common return)
- Synchronous control so system Beacons flash simultaneously at fixed rate
- Flash-intensity mode control so system Beacons flash at proper light output during the day, twilight, and night
- Manual or automatic (photoelectric control) selection of flash intensity mode
- Flash delay capability so flashing mode of system Beacons can be synchronized with another ElectroFlash system on an adjacent structure

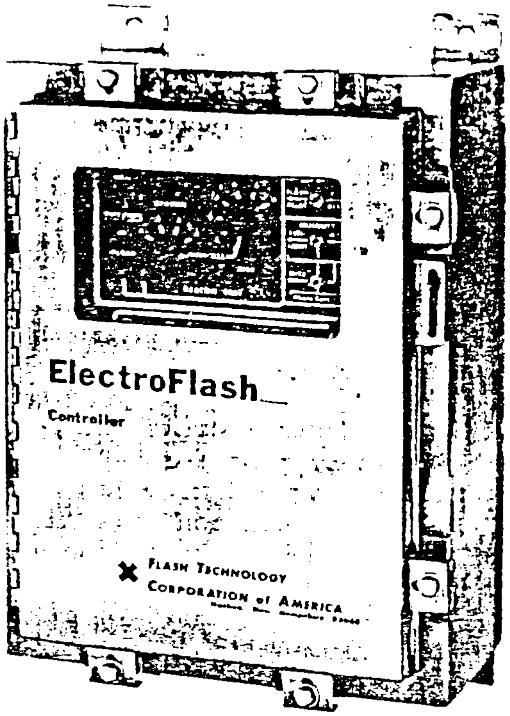

A. SC-105, the NEMA 4 enclosure unit

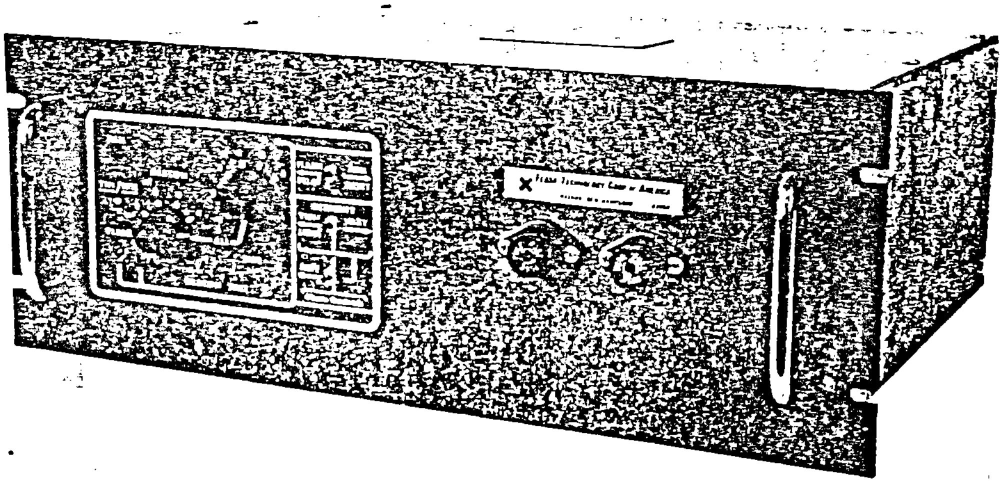

B. SC-105R, the rack mounted unit

Figure 1-1. SC-105 and SC-105R System Controllers

1.3.2 Monitor Features

- Single-wire monitor signal from all Beacons in system (common return)
- Automatic sensing and display of Beacon flashing — selected as an individual Beacon or as all Beacons
- Failure indication when a Beacon or combination of Beacons fails to flash three consecutive times
- Remote alarm output of Beacon failure indication (including SC-105 power failure) — SPDT contacts, 25 A at 115/230 Vac or 25 A at 28 Vdc
- Automatic reset of remote alarm output when Beacon failure clears (or SC-105 power restores)

1.3.3 Electrical Input

- SC-105: 480 volts, 60 Hz, single phase
- SC-105R: 120 volts, 60 Hz, single phase
- 50 watts

1.3.4 Mechanical Characteristics

- SC-105: 12 inches (305 mm) wide by 16 inches (406 mm) high by 7-11/32 inches (187 mm) deep; 30 pounds (13.6 kg)
- SC-105R: 19 inches (483 mm) wide by 7 inches (178 mm) high by 15.74 inches (400 mm) deep; 15.5 pounds (7.0 kg)

1.4 OPTIONS

The options described in the next paragraphs are available to modify the standard System Controller. If your System Controller contains an option, its inclusion is stated in the Preface of this instruction manual. Included options, except Electrical Input and Manual Reset, involve enough circuit modification to need a detailed discussion in Section 7, Supplementary Data, of these instructions.

1.4.1 Electrical Input

- SC-105: 120, 208, or 240 volts, 60 Hz, single phase; or 120, 230, 240, 380, or 480 volts, 50 Hz, single phase
- SC-105R: 120 volts, 50 Hz, single phase

1.4.2 Manual Reset

This option replaces automatic reset and maintains the state of the remote alarm output after a Beacon failure clears. Manual reset ensures that a Beacon failure (and SC-105 power failure) will be detected by operating personnel. The operator must close the FAIL RESET switch manually to reset and clear the state of remote alarm output.

1.4.3 Red Light Night

This option is used for dual lighting installations where an ElectroFlash Beacon System for daytime operation is combined with aviation red obstruction lights for nighttime operation. During the nighttime while the red lights are on, the fail circuitry is inhibited to prevent a Beacon failure indication while the ElectroFlash Beacons are off.

1.4.4 DAY-Mode Operation Confirmation

This option adds a relay to the System Controller for remote indication of the DAY mode operation. With this option, proper operation of the Photoelectric Lighting Controls for sensing the DAY mode can be confirmed remotely.

1.4.5 Standby System Controller Application

This option adds a standby System Controller in parallel with the main System Controller to provide a second source of independent control. In the event that the main System Controller indicates a failure (its circuit fails or a Beacon fails), the system automatically switches to the standby System Controller to ensure proper system control and monitoring.

SECTION 2

INSTALLATION

2.1 LAYOUT AND MOUNTING

The SC-105 System Controller is intended for indoor or outdoor installations. This unit is housed in a NEMA 4 enclosure, which should be mounted vertically with the cable connections and the drain hole at the bottom. Outline and mounting dimensions are shown in Figure 2-1.

The SC-105R System Controller is intended for indoor installations. This unit is housed in an enclosure suitable for front panel mounting in a conventional 19-inch relay rack. Outline and mounting dimensions are shown in Figure 2-2.

2.2 INTERCONNECTION WIRING

Power and signal interconnections to the System Controller are made to terminal block TB1 (see Figure 2-3). Wiring terminations at this terminal block are identified below.

TB-1	AC power input (Line 1)
-2	AC power input (Line 2)
-3	Night Photoelectric Lighting Control signal input (120 Vac during night)
-4	Photoelectric Lighting Controls power return (chassis ground potential
-5	Photoelectric Lighting Controls power source (120 Vac)
-6	Alarm relay N.O. contact (closes on Beacon failure)
-7	Alarm relay contacts common
-8	Alarm relay N.C. contact (opens on Beacon failure)
-9	Chassis ground
-10	Twilight Photoelectric Lighting Control signal input (N.O. contacts close to chassis ground potential during twilight)
-11	Monitor signal input from Beacons
-12	Control signal output to Beacons

Note: Separate chassis terminals for grounding are provided for the ground wire (green) of the ac power input and for the shield of the control and monitor cable.

Refer to the System Instructions section of this manual for system interconnections and general wiring requirements. Note that the control and monitor signals are transmitted between the System Controller and

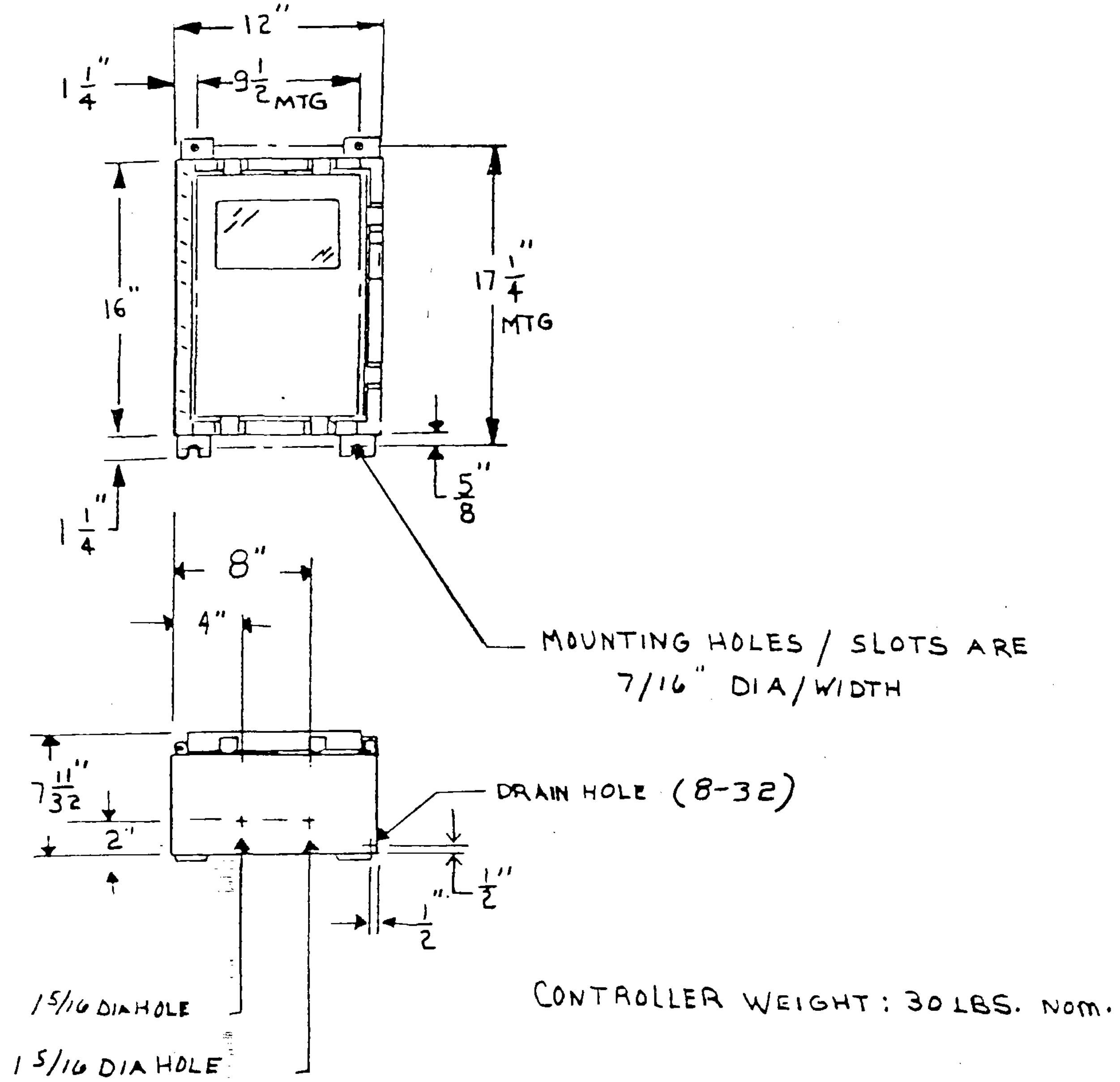

Figure 2-1. Outline Drawing of SC-105 (A-1359)

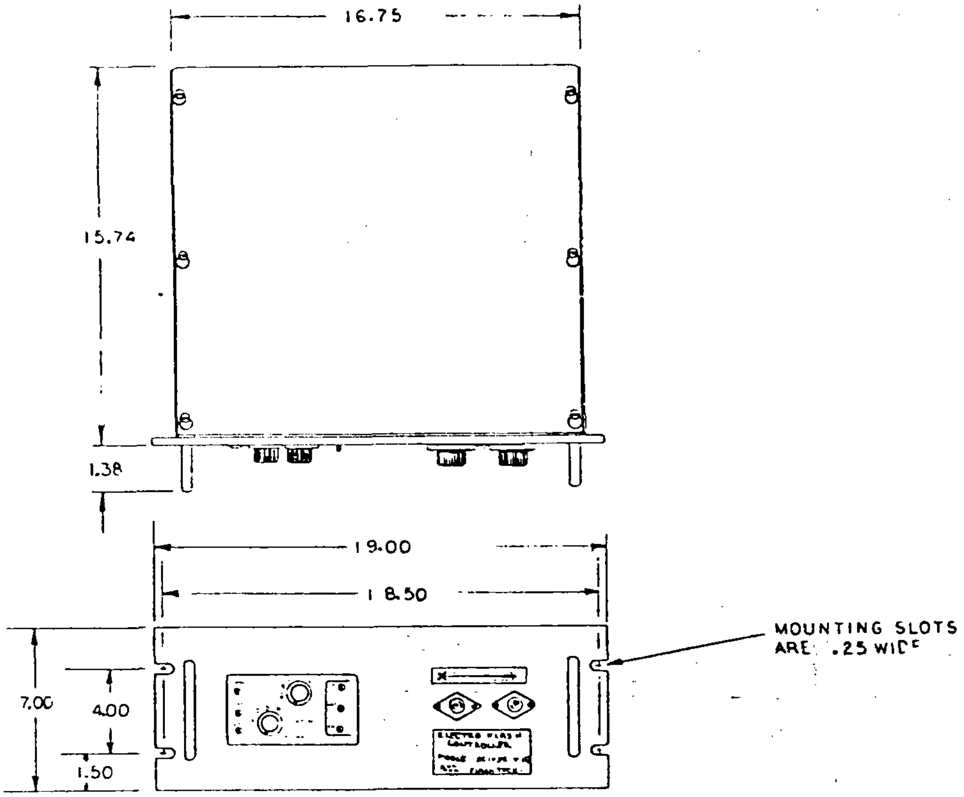

Figure 2-2. Outline Drawing of SC-105R (C-2839)

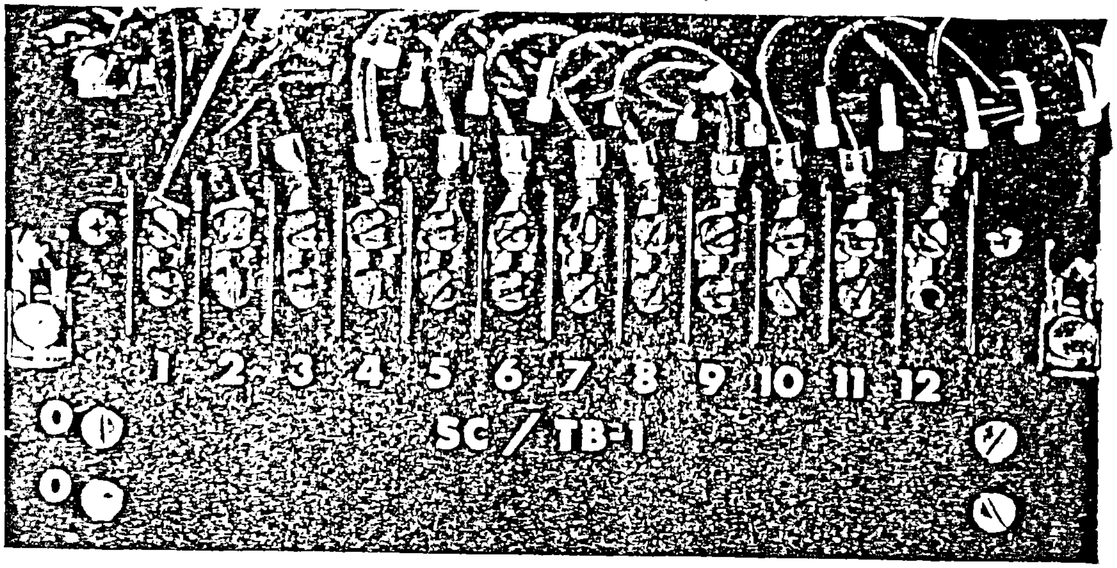

A. At front of SC-105

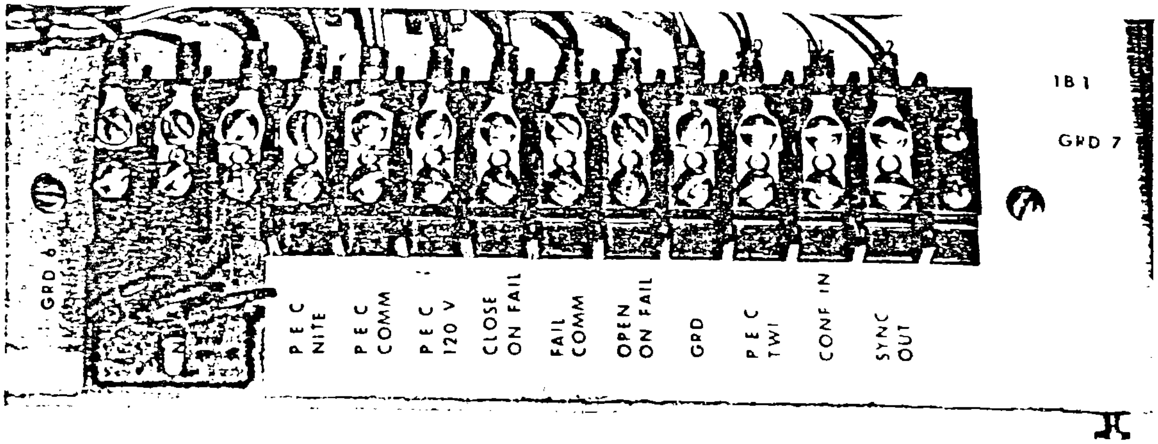

B. At rear on SC-105R

Figure 2-3. Wiring Terminations at Terminal Block TB1 the parallel-connected Beacons over a shielded pair of twisted wires (made possible by the use of a time-shared digital technique).

2.3 FLASH RATE PROGRAMMING

The System Controller has been wired at the factory to synchronize the Beacons at the proper flash rate for your installation. Four out of six terminals (E1 through E6) are jumpered by two wires on the controller board to give the proper flash rate (see Figure 2-4).

For *Type A systems* (1.5-second control signal interval), terminal E1 must be jumpered to terminal E2 and terminal E4 must be jumpered to terminal E5. For *Type B systems* (1.0-second control signal interval), terminal E1 must be jumpered to terminal E3 and terminal E4 must be jumpered to terminal E6.

2.4 BEACON-TIER PROGRAMMING

The System Controller has been set up at the factory to monitor the Beacons in your particular installation. A check on the controller board (see Figure 2-4) should ensure that the unit still is programmed properly.

For programming, the controller board contains a DIP switch for each tier in the system (S1 = TIER 1, S2 = TIER 2, S3 = TIER 3, etc). Each switch has four rocker switch arms for up to four Beacons (B1, B2, B3, B4) that can be located on a tier. Every Beacon in the system must be represented by a corresponding switch arm in the closed position; all other switch arms must be in the opened position.

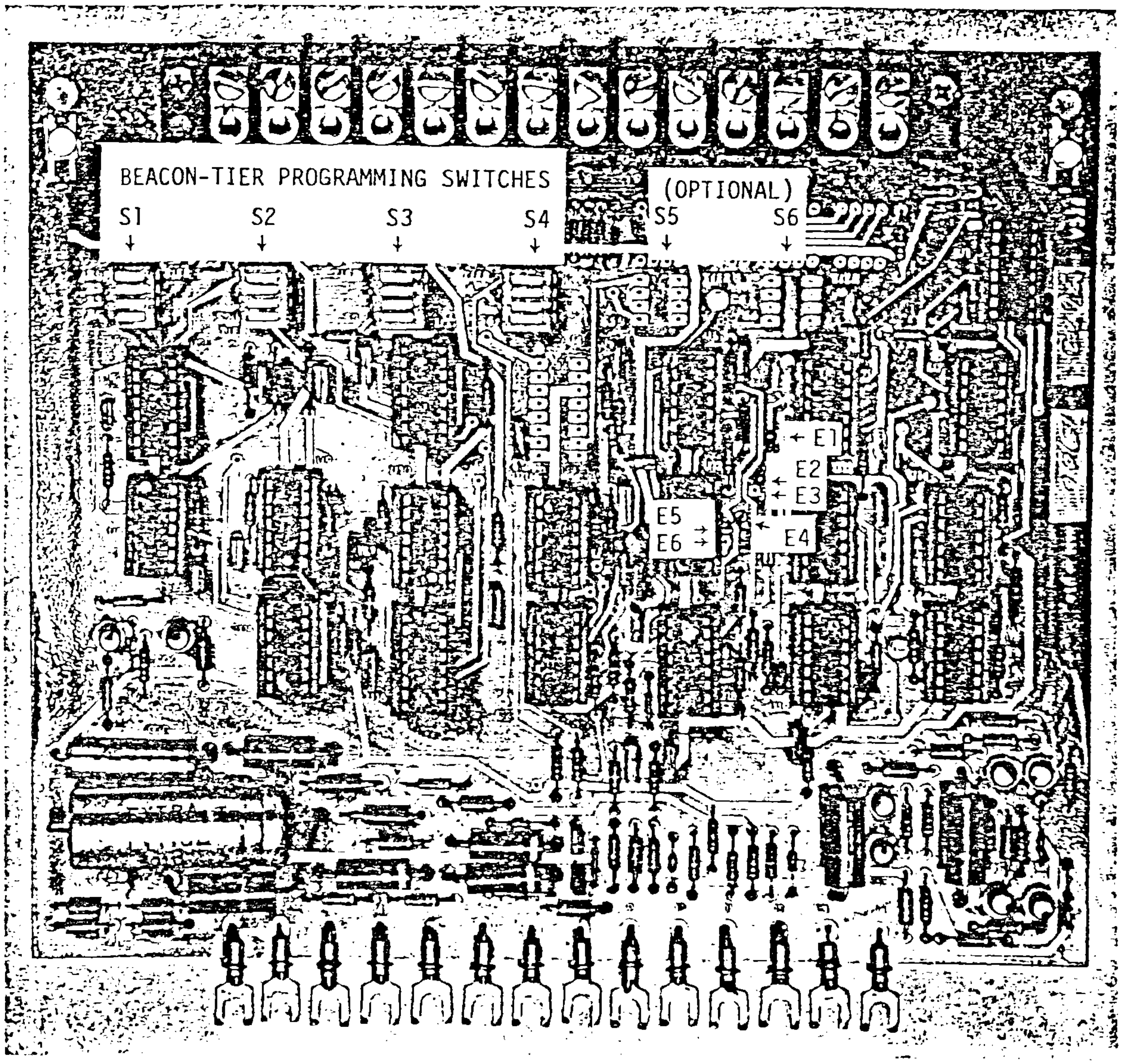

Figure 2-4. Component-Side View of Controller Board (P/N 2600)

SECTION 3

OPERATION

3.1 CONTROLS AND INDICATORS

Controls and indicators for operating and monitoring the ElectroFlash Beacon System are located on the front panel of the System Controller as shown in Figure 3-1. After initial start-up by the *System Checkout Procedure*, the operating and monitoring of the system are automatic as outlined in the *Normal Operating Procedure.* Emergency or unusual operation with the System Controller is described under *Special Operating Conditions*.

3.2 SYSTEM CHECKOUT PROCEDURE

Perform the following system checkout after system installation or whenever helpful to diagnose a fault in the system.

1. Turn BEACON and TIER switches to the ALL positions.
2. Place upper and lower INTENSITY switches at the PHOTO CONTROLS position.
3. Apply ac power to the ElectroFlash Beacon System.
4. Measure ac voltage across terminals 1 and 2 of terminal block TB1: voltage should agree with that as marked in nameplate area of System Controller.
5. Check that FLASH indicator light is blinking and that FAIL indicator light is off, indicating that all Beacons are flashing.
6. Check that TWI/NITE indicator light is off (assumes that checkout is made during the day). Verify by visual inspection that the Beacons flash in synchronism at daytime (high-level) intensity.
7. Place an opaque cover over the Twilight Photoelectric Lighting Control, and check that the TWI/NITE indicator light blinks off and on. Verify by visual inspection that the Beacons flash in synchronism at twilight (medium-level) intensity.
8. Place an opaque cover over the Night Photoelectric Lighting Control, and check that the TWI/NITE indicator light remains on (steady). Verify by visual inspection that the Beacons flash in synchronism at nighttime (low-level) intensity with a noticeably longer flash duration than in the DAY and TWI modes.
9. With Night Photoelectric Lighting Control still covered, manually select DAY mode (upper INTENSITY switch at DAY, lower INTENSITY switch at right). Observe that TWI/NITE indicator light is off.
10. With no opaque covers over the Photoelectric Lighting Controls, manually select TWI mode (upper INTENSITY switch at TWI). Observe that TWI/NITE indicator light blinks off and on.

10037000

Red LED indicator—Lights when any Beacon or combination of them fails to flash for three successive times.

Failure relay is de-energized at same time, changing state of remote alarm output.
Note: remote alarm output also changes state during a power loss.

Toggle switch—At FLASH DELAY (momentary position), lengthens control signal interval so Beacons' flashing rate can reach a point of synchronization with that of an adjacent ElectroFlash system.

At FAIL RESET (momentary position), resets remote failure alarm output, if Manual Reset option is included, after system failure is cleared.

Amber LED indicator—Blinks when Beacons are commanded to flash at TWILIGHT intensity.

Lights when Beacons are commanded to flash at NITE intensity.

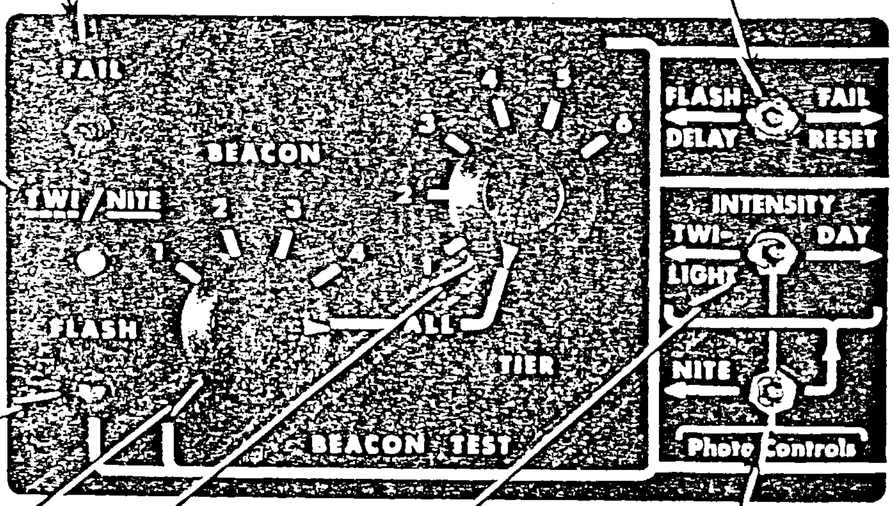

Green LED indicator—Blinks to confirm normal operation of Beacon(s) selected at BEACON-TIER switches. A blink indication denotes confirmation of previous flashes.*

Rotary switch—Selects any one or all Beacons in a tier for monitoring.

Rotary switch—Selects any one or all tiers of Beacons for monitoring.

Toggle switch—At PHOTO CONTROLS, enables Twilight Photoelectric Lighting Control to determine DAY or TWILIGHT intensity mode of Beacons automatically.

At other positions, mode (DAY or TWILIGHT) is selected manually. #

Toggle switch—At PHOTO CONTROLS, enables Night Photoelectric Lighting Control to determine NITE intensity mode of Beacons automatically.

At NITE position, NITE mode is selected manually. At right (up-arrowed) position, disables NITE mode and setting of upper INTENSITY switch determines intensity mode.

---

*Also blinks at unused Beacon-Tier locations. #NITE mode takes precedence.

Figure 3-1. Operating Controls and Indicators

11. Manually select NITE mode (lower INTENSITY switch at NITE). Observe that TWI/NITE indicator light is on steady.

12. Disconnect monitor cable wire from terminal 11 of terminal block TB1.

    WARNING: Do not contact ac power at terminals 1 and 2 (and 5) of terminal block TB1.

13. Observe that FLASH indicator light stops blinking. After missing three flashes (after about 5 seconds), check that FAIL indicator light turns on (remote alarm, if used, should activate).

14. Reconnect monitor cable wire to terminal 11 of terminal block TB1.

    WARNING: Do not contact ac power at terminals 1 and 2 (and 5) of terminal block TB1.

15. Observe that FLASH indicator light resumes blinking and FAIL indicator light turns off. [If Manual Reset option is installed in System Controller, place FLASH DELAY/FAIL RESET switch momentarily at FAIL RESET position to reset the remote alarm output.]

16. Turn BEACON and TIER switches successively to different numbered positions representing each location of an installed Beacon. At each Beacon location of the switches, check that FLASH indicator light blinks to confirm that particular Beacon as operating normally.

17. At initial checkout, stand by until the light intensity decreases to twilight level and then to nighttime level by the approach of night. Check that the automatic mode switchovers (both INTENSITY switches at PHOTO CONTROLS) occur at reasonable levels; TWI mode starts from 60 to 30 footcandles (646 to 323 lux) and NITE mode starts from 5 to 2 footcandles (54 to 22 lux).

3.3 NORMAL OPERATING PROCEDURE

3.3.1 Controls and Indicators Setup

1. Turn BEACON and TIER switches to the ALL positions.
2. Observe that FLASH indicator light is blinking and FAIL indicator light is off.
3. Place upper and lower INTENSITY switches at the PHOTO CONTROLS position.
4. Observe that TWI/NITE indicator light displays the light level detected by the Photoelectric Lighting Controls (off is DAY mode, blinking is TWILIGHT mode, and on is NITE mode).

3.3.2 Beacon Failure Identification

A Beacon failure is indicated by the FLASH indicator light not blinking and the FAIL indicator light being on. The Beacon(s) at fault can be identified as follows:

1. Leave BEACON switch at its ALL position.
2. Turn TIER switch to position 1 and then successively to higher numbered positions at tier levels with Beacons. At these switch settings, a blinking FLASH indicator light designates all normal Beacons on that tier, while a nonblinking light designates one or more faulty Beacons on that tier. Leave TIER switch set at tier position with faulty Beacon(s).
3. Turn BEACON switch to position 4 and then successively to lower numbered positions representing a system Beacon. At these switch settings, a blinking FLASH indicator light designates a normal Beacon, while a nonblinking light identifies a faulty Beacon.

Note: Check all Beacons in a tier at which a fault is found. If faults occur on more than one tier, confirm faults by visual inspection of the Beacons' flashing.

3.4 SPECIAL OPERATING CONDITIONS

Operating conditions other than normal operation may be necessary as described in the next paragraphs.

3.4.1 Manual Intensity-Mode Selection

Unusual visibility conditions or loss of automatic mode control by the Photoelectric Lighting Controls may make the manual selection of an intensity mode desirable. For the duration of such a circumstance, place the appropriate INTENSITY switch at DAY, TWILIGHT, or NITE to select the desired intensity mode.

3.4.2 Two-System Flash Synchronization

The System Controller contains a FLASH DELAY/FAIL RESET switch to synchronize the flashing of your ElectroFlash Beacon System with another or similar ElectroFlash system on an adjacent structure. If needed, hold the switch (momentary action type) at the FLASH DELAY position (increases duration of flashing interval) until instant when flashing of delayed Beacons coincides with flashing of adjacent system. At that instant, release the switch from FLASH DELAY position, and both systems should stay in synchronism.

SECTION 4

PRINCIPLES OF OPERATION

4.1 OVERALL DESCRIPTION

The main functions of the System Controller are performed by the control signal circuit and the monitor signal circuit (see Figure 4-1). These circuits are contained on the controller board (PCB-1). Other components are mounted on the front panel and the chassis. Schematic diagrams of the System Controller circuits are included in Section 5.4.

Functionally, the control signal circuit generates the digitally encoded control signal and transmits it to each of the Beacons. Encoded timing information synchronizes the flashing of all Beacons in the system. Encoded intensity information sets the Beacons' flashing at one of three intensity levels for daytime, twilight, or nighttime operation. The intensity level can be established automatically by inputs from two Photoelectric Lighting Controls or manually by selection with two front-panel switches.

During the twilight, contacts in the Twilight Photoelectric Lighting Control close to apply a TWI signal input (ground potential) to the control signal circuit. During the night, contacts in the Night Photoelectric Lighting Control close to apply a NITE signal input (120 Vac) to energize the NITE relay. In turn, contacts of this relay open to remove a grounded input to the control signal circuit. The absence of both the TWI and the NITE signal inputs results in the DAY mode.

The monitor signal circuit processes the digitally encoded monitor signals received from Beacons in the system. This processing separates and accounts for each Beacon's monitor signal which occurs in a particular time slot corresponding to the Beacon's assigned location. Two front-panel rotary switches allow the flashing status of any one or all Beacons to be displayed. In addition, if any Beacon or combination of Beacons fails to flash three times in succession, the monitor signal circuit produces a failure output indication. The failure output also de-energizes the failure relay (fail-safe return through fail interrupt relay) to provide an output for a remote alarm system.

For power distribution, a power transformer supplies three different ac voltages. A 120-volt output (isolated from input) energizes the Photoelectric Lighting Controls and the failure relay (normally energized). A 24-volt output connects to a rectifier-filter on the controller board. The rectifier-filter produces voltage outputs of +10 volts and +30 volts (nominal value) for the integrated and discrete devices, respectively. A 7-volt output becomes a timing reference.

Logic circuits on the controller board employ CMOS integrated circuit devices for high noise immunity. These circuits employ positive logic

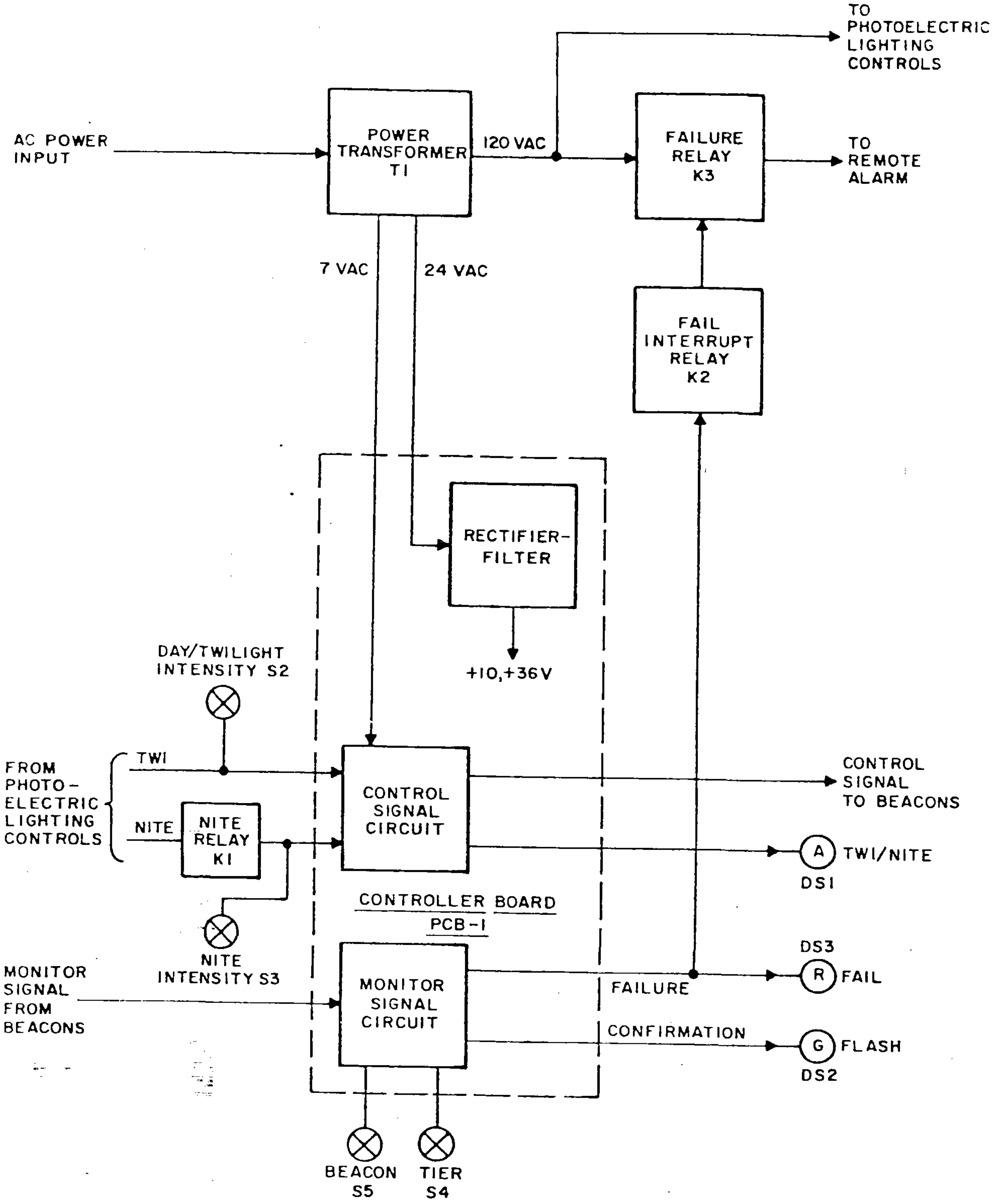

Figure 4-1. Block Diagram of System Controller

in which a logical one level corresponds to +10 volts and a logical zero level corresponds to 0 volts. The use of digital logic allows the control and monitor signals between the System Controller and all its Beacons to be transmitted over a shielded pair of twisted wires.

4.2 CONTROL SIGNAL CIRCUIT

4.2.1 Timing Reference

Basic timing for the control signal circuit (and the monitor signal circuit) is derived from clock generator U15 (see Figure 4-2). This device produces two square-wave outputs (F and its complement $\overline{F}$), both at the same frequency as the 7-volt ac input. Wiring interconnections ensure that clock F pulses in the System Controller are synchronized with clock F pulses in the system Beacons.

4.2.2 Control Signal Timing

To establish the control signal interval, clock F pulses are applied to 7-stage ripple counter U12. This counter produces binary weighted outputs from C1 (F ÷ 2) through C7 (F ÷ 128) as shown in the timing diagram included in Section 5.4. Appropriate jumper connections for the desired control-signal interval are factory wired to select the proper counter outputs to the control-signal interval decoder. As soon as the selected counter outputs reach a logical one level of coincidence, the decoder sync count output switches to a logical one level and presets the reset flip-flop (U5). In turn, the Q output of this flip-flop clears counter U12 to restart its counting. Other decoder outputs (test reset and flash confirm reset) are produced at appropriate times within the control signal interval as inputs for the monitor signal circuit.

Flash delay circuit U18-U6 enables the control signal interval to be lengthened momentarily to synchronize the Beacons with the flashing rate of a neighboring system. When the operator holds front-panel switch S1 in the FLASH DELAY position, the flash delay circuit becomes enabled to add one logical one state of the C1 counter output to the combination of outputs selected for a normal sync count. This added counter output lengthens the control signal interval slightly. After reaching a point of coincident flashing with the other system, switch S1 is released to maintain flash synchronism.

4.2.3 Control Signal Encoding

A 6-bit shift register (U15-U10-U9-U8) is utilized to encode the control signal. This shift register is connected for parallel-to-serial data conversion. The control signal output of the shift register contains 6 bits that occur each control signal interval, which the preset pulse (differentiated sync reset) initializes. The digital states of the six parallel-bit inputs to the shift register determine the digital

10037600

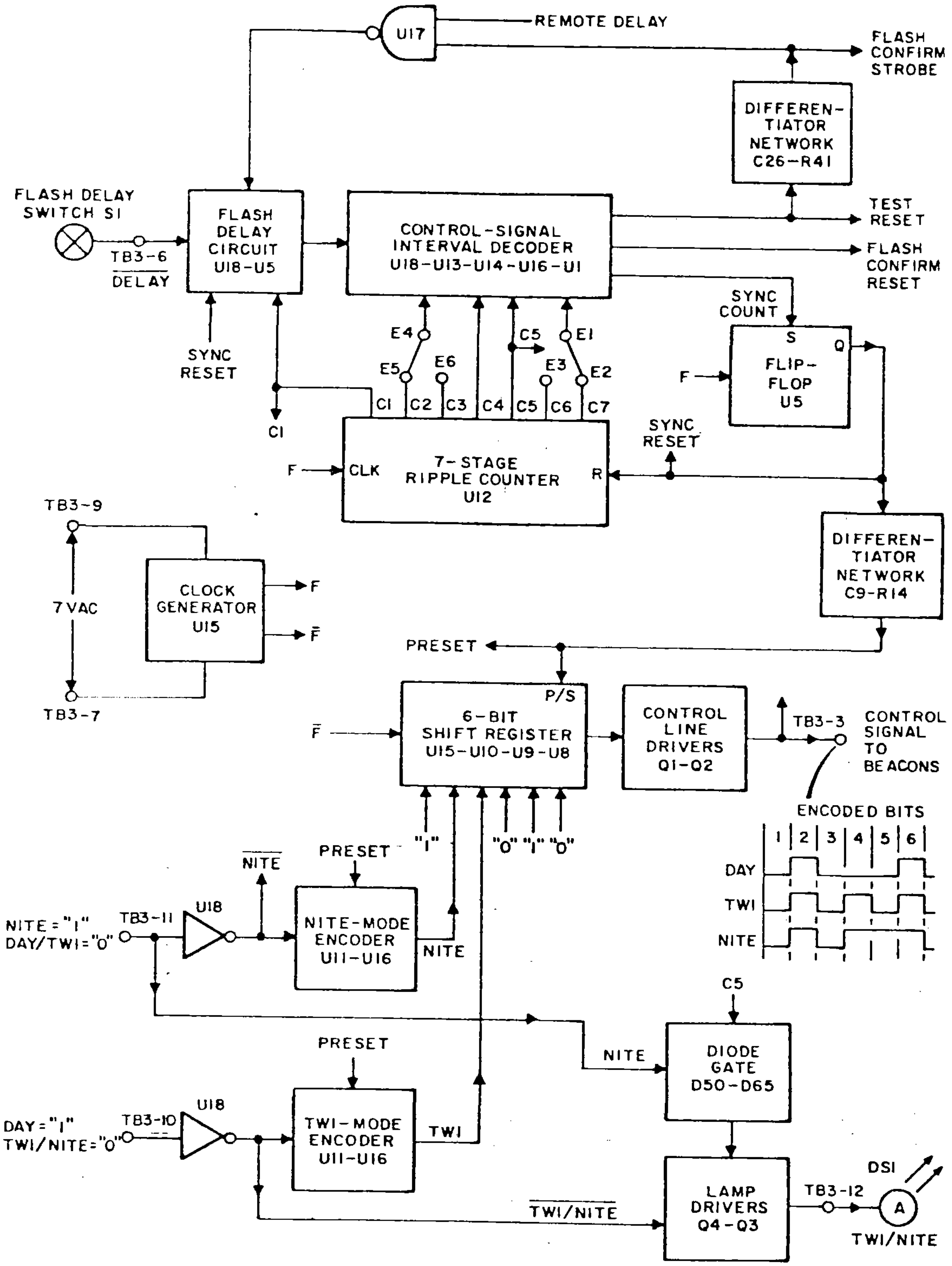

Figure 4-2. Block Diagram of Control Signal Circuit

states of the corresponding serial-bit outputs. Each clock $\overline{F}$ pulse produces one serial-bit output, with the 6 bits being encoded at the first part of the control signal. Note that the sixth shift register stage (nearest the output) produces the first encoded bit.

Figure 4-2 shows the control signal encoding. Bits 2 and 6 are always a logical one; bits 1 and 3 are always a logical zero. The decoding of these bits at a Beacon provides the synchronizing information. The three logical combinations of bits 4 and 5 convey the intensity level information.

4.2.4 Intensity Mode Encoding

The intensity mode of operation for the Beacons is encoded from the inputs applied to the NITE-mode encoder (U11-U16) and the TWI-mode encoder (U11-U16). When selected either automatically or manually, the three intensity modes are defined by the logical level combination of inputs as shown at terminals TB3-10 and TB3-11 on Figure 4-2. These inputs to the mode encoders result in either the DAY, TWI, or NITE mode being encoded as bits 4 and 5 of the control signal.

Visual display of the selected intensity mode is obtained from the inverted input from terminal TB3-10. During either the TWI or the NITE mode, lamp drivers Q4 and Q3 are enabled to turn on front-panel TWI/NITE indicator light DS1. In the TWI mode, diode gate D50-D65 gates through counter output C5 to switch the drivers off and on for a blinking light from DS1. In the NITE mode, diode gate D50-D65 inhibits counter output C5 to the drivers for a steady light from DS1. Otherwise, in the DAY mode, the drivers are disabled and DS1 remains off.

4.3 MONITOR SIGNAL CIRCUIT

4.3.1 Monitor Signal Input

At each flash, a Beacon produces a monitor signal output (a positive going pulse about 25 volts at peak and two F clock periods in duration). For identification, the Beacon delays the monitor signal by an amount that depends on the Beacon's position in the system. Each Beacon's flashing is characterized by a monitor signal (presence = a flash, absence = no flash) that occurs at a different time slot of the control signal interval (refer to timing diagram in Section 5.4). The circuits in the Beacons are set so the monitor signal from Beacon 4 of Tier 1 is delayed the most and that from Beacon 1 of Tier 6 is delayed the least. With this time multiplexed arrangement, the monitor line from all the system Beacons transmits a sequence of serial monitor signals to the System Controller each control signal interval.

4.3.2 Monitor Signal Decoding

The serial sequence of monitor signals from the Beacons is applied as one input to NAND decoupler U17 (see Figure 4-3). This circuit function conditions the monitor signals for CMOS compatibility and inhibits these signals during periods of sync and intensity mode encoding of the control signal. Timing signal C1 (from the control signal circuit) clocks the output of the NAND decoupler (a complement of the monitor signal input) into monitor signal latch U8.

The presence or absence of each monitor signal is determined by a 24-stage shift register and a 24-point Beacon-Tier programming matrix. Each stage of the shift register and each intersection point of the programming matrix corresponds to a different Beacon. Timing signal C1 clocks in the monitor signal serial input to the shift register for a parallel readout to the programming matrix. During shift register loading, the presence of a monitor signal ($\overline{Q}$ output of U8 at a logical one) causes the first stage of the shift register to be set at a logical one. Or, the absence of a monitor signal causes the first stage to be set to a logical zero. After 24 pulses of timing signal C1 following the time occurrence for arrival of the Beacon 1 Tier 6 monitor signal, the shift register becomes loaded with monitor signals. Each of the 24 shift-register stages will indicate whether or not a monitor signal has been received from the corresponding Beacon.

The Beacon-Tier programming matrix contains 24 switch elements (four switch arms each on up to six switches S1 thru S6, refer to Figure 2-4) that correspond to the 24 different Beacon locations. Every Beacon installed in the system must be represented by a corresponding switch arm in the closed position to connect that shift register output. Each unused Beacon location in the system must be represented by a corresponding switch arm in the opened position to disconnect (ignore) that shift register output. With front-panel switches S4 and S5, the outputs of the programming matrix can be selected for any BEACON-TIER location. NAND gate U6 sums the Beacon outputs for the ALL selections of BEACON and/or TIER locations. At the switch S4 and S5 terminals, a logical one represents the presence of that monitor signal, and a logical zero represents its absence.

4.3.3 Flash Confirmation

To confirm the status of Beacon flashing, selected outputs of switches S4 and S5 are applied to flash confirm enable U1-U7. This circuit function samples the selected switch outputs during the flash confirm strobe (occurs at time slot after shift register becomes loaded with corresponding monitor signals). When the selected switch outputs are both logical ones at this time, the strobed output sets flip-flop U20 to activate lamp drivers Q6-Q5 to energize FLASH indicator light DS2. This front panel light blinks on to indicate a Beacon flash; the light blinks off when U20 is reset early the next control signal interval. If either selected switch output is a logical zero when strobed, flip-flop U20 stays reset and DS2 does not blink, denoting a missing Beacon flash.

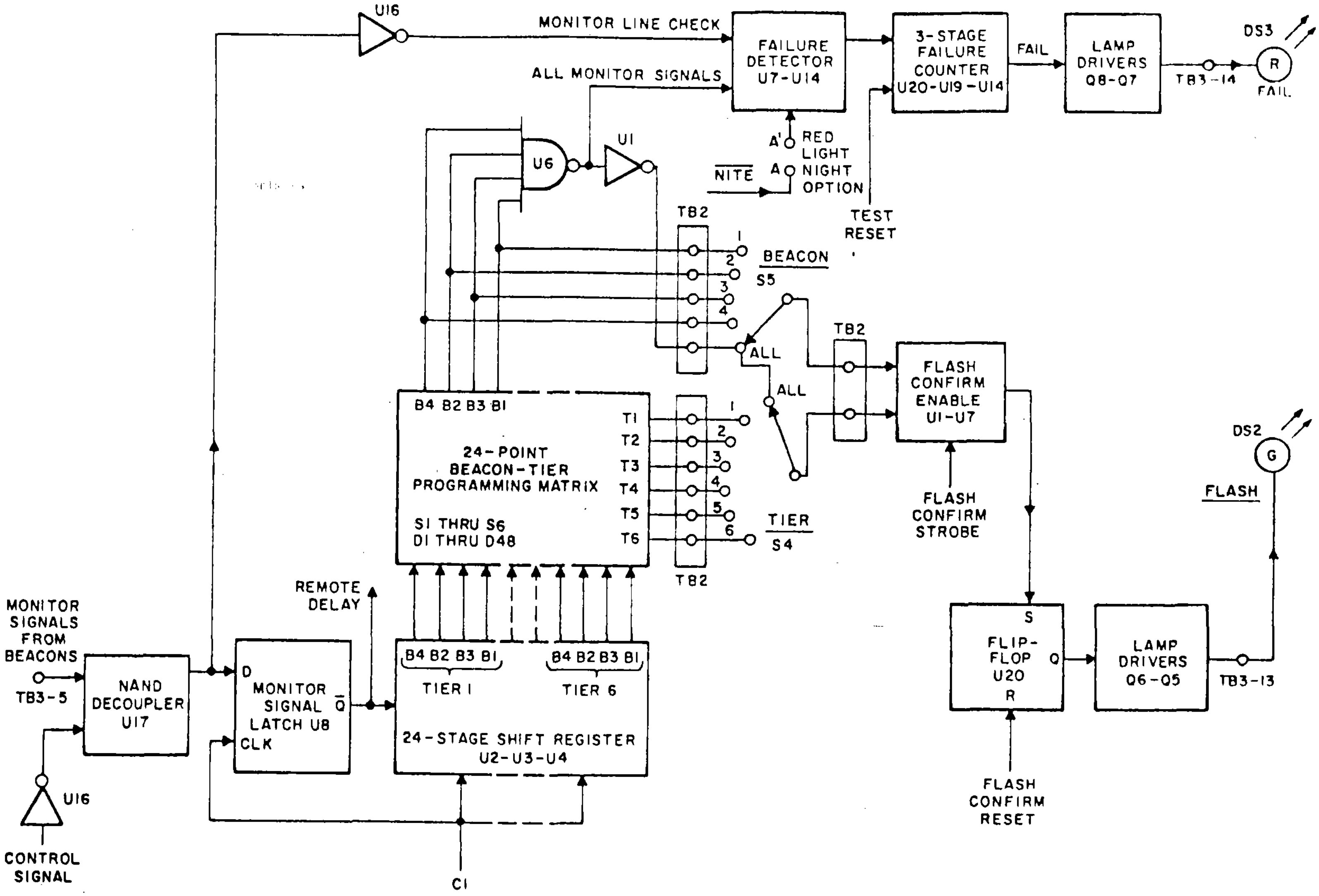
U16
MONITOR LINE CHECK
FAILURE DETECTOR U7-U14
3-STAGE FAILURE COUNTER U20-U19-U14
FAIL
LAMP DRIVERS Q8-Q7
TB3-14
DS3
R
FAIL
ALL MONITOR SIGNALS
U6
U1
A'
A
RED LIGHT NIGHT OPTION
NITE
TEST RESET
TB2
1
2
3
4
BEACON
S5
ALL
ALL
TB2
FLASH CONFIRM ENABLE U1-U7
FLASH CONFIRM STROBE
B4 B2 B3 B1
24-POINT BEACON-TIER PROGRAMMING MATRIX
S1 THRU S6
D1 THRU D48
T1
T2
T3
T4
T5
T6
1
2
3
4
5
6
TIER
S4
TB2
DS2
G
FLASH
REMOTE DELAY
MONITOR SIGNALS FROM BEACONS
TB3-5
NAND DECOUPLER U17
D
MONITOR SIGNAL LATCH U8
Q̄
CLK
B4 B2 B3 B1
TIER 1
B4 B2 B3 B1
TIER 6
24-STAGE SHIFT REGISTER U2-U3-U4
S
FLIP-FLOP U20
Q
R
LAMP DRIVERS Q6-Q5
TB3-13
FLASH CONFIRM RESET
U16
CONTROL SIGNAL
C1

4.3.4 Failure Detection

To detect the failure of any of the Beacons, failure detector U7-U14 samples two different inputs. One input consists of all the monitor signals (summed output of U6); a logical one level (a missing monitor signal) at this input results in a failure condition output. The second input checks the monitor line for a false no-failure state; a continuous or too long a logical one level (invalid monitor signal) at this input results in a failure condition output. During a failure condition, the failure detector produces a logical one level output. [When Red Light Night option is included, terminals A and A' on controller board PCB-1 are connected by a wire jumper. With this option in effect, failure detector U7-U14 is inhibited during the NITE mode so no failure can be detected. A failure can be detected normally during the DAY and TWI modes, but the no flashing of Beacons during the NITE mode does not result in a failure.]

The output of failure detector U7-U14 is applied to the input of 3-stage failure counter U20-U19-U14. If the detector senses a failure condition as the counter is clocked by the test result signal (starts in time slot after shift register becomes loaded with corresponding monitor signals), the first counter stage becomes set. When the failure condition exists during three successive control-signal intervals (caused by any failing Beacon or combination of failing Beacons), all three counter stages become set to produce a fail output. The fail output (logical one level) activates lamp drivers Q8-Q7 to energize FAIL indicator light DS3. This front panel light stays on for as long as the fail output exists.

Whenever the FAIL indicator light is energized, fail interrupt relay K2 is also energized. Energizing K2 causes failure relay K3 to be de-energized. While de-energized, K3 activates the external remote alarm (if used). Note that K3 normally is energized for fail-safe operation; it can also be de-energized by a loss of ac input power. [If the Manual Reset option is included, relay K3 latches out to remain de-energized following a system failure (Beacon failure or ac power failure). After the fault has been cleared, front panel switch S1 must be held momentarily in the FAIL RESET position to energize K3 again and deactivate (reset) the external remote alarm.]

4.3.5 Remote Delay

The System Controller includes a remote delay feature for convenience of the serviceman. From a Beacon location, the serviceman can lengthen the control interval remotely to synchronize the Beacons with the flashing rate of a neighboring system. By programming Beacon No. 1 of Tier 0 at a Beacon, that monitor signal output (remote delay signal) from NAND decoupler U17 in the System Controller is NANDed with the flash control strobe by gate U17. Upon coincidence of these two signals, flash delay circuit U18-U5 becomes enabled. As a result, the control signal interval is lengthened slightly as if switch S1 were held locally in the FLASH DELAY position.

SECTION 5

MAINTENANCE

5.1 PREVENTIVE MAINTENANCE

The System Controller does not require any preventive maintenance on a frequently scheduled basis when the unit operates in a normal environment. At yearly intervals, or more often if operated at environmental extremes, an inspection of the unit should be made. The System Checkout Procedure (Paragraph 3.2) can be used to confirm proper operation. If needed, clean the unit with forced air (not over 40 psig) or with a vacuum to remove foreign particles and dust.

.2 TROUBLESHOOTING

Controls and indicators on the System Controller provide the means for localizing trouble to a faulty Beacon (refer to Paragraph 3.3.2). For other system trouble diagnosis, use the System Checkout Procedure (Paragraph 3.2) to localize trouble to a faulty Photoelectric Lighting Control or to the System Controller. When the System Controller is suspect, use Table 5-1 as a troubleshooting aid for locating trouble within this unit.

5.3 PARTS REPLACEMENT

Most of the parts that might need replacement in the System Controller are located on the printed-circuit controller board PCB-1; the replacement of other parts is straightforward. Figures 5-1 and 5-2 illustrate the parts locations for the SC-105, and Figure 5-3 illustrates the parts locations for the SC-105R.

If controller board PCB-1 contains a fault, send the board back to the factory for repair. FTCA will repair it or replace it and charge only for the repair cost.

CAUTION: When handling printed circuit boards which contain integrated circuit devices, avoid conditions in which you could conduct a static charge to the terminals of the board. Keep boards not in use in an anti-static (partially conductive) plastic bag that covers the connecting lugs.

5.3.1 Controller Board Replacement in SC-105

To replace controller board PCB-1 in the SC-105 System Controller, proceed as follows:

1. Disconnect the ac input power to the SC-105.
2. Loosen the clamps that secure the enclosure door, and open the door.

Table 5-1. System Controller Troubleshooting Chart

Symptom	Probable Cause	Remedy
1. SC-105 inoperative	a. Blown power fuse	a. Find reason for overload and repair fault; replace fuse.
	b. No 10 or 36 Vdc from rectifier-filter	b. Replace controller board PCB-1.
	c. No 7 or 24 Vac to controller board	c. Replace power transformer.
2. SC-105 operates only in DAY mode at PHOTO CONTROLS	a. No ac power to Photoelectric Lighting Controls	a. Check for loose or faulty wiring in this circuit; correct as necessary. • Check 120-Vac output from power transformer; replace if winding is open.
3. No NITE mode at PHOTO CONTROLS	a. Faulty NITE relay K1	a. Replace relay K1.
4. No DAY or TWI mode at PHOTO CONTROLS	a. Dirty contacts in NITE relay K1	a. Clean N.C. contacts of K1.
5. SC-105 will not select (manual or auto) an intensity mode	a. Faulty mode encoding in control signal circuit	a. Replace controller board PCB-1.
6. Remote alarm always activated	a. Faulty N.C. contacts in fail interrupt relay K2.	a. Clean N.C. contacts, or replace relay K2 if necessary.
	b. Open coil in failure relay K3.	b. Replace relay K3.
7. All Beacons monitor FAIL but flash at nonsynchronized rate (self-flash)	a. Open or shorted control and monitor cable	a. Check for loose connection at SC-105 or for open or short in control signal wiring; correct as necessary.
	b. Faulty control signal circuit	b. Replace controller board PCB-1.

Table 5-1. (continued)

Symptom	Probable Cause	Remedy
8. All Beacons monitor FAIL but flash at synchronized rate (by SC-105)	a. Open or shorted monitor cable	a. Check for loose connections or shorts in monitor signal wiring; correct as necessary.
9. No FLASH indication but no FAIL indication (Beacons flashing)	a. Faulty flash confirm function	a. Replace controller board PCB-1.
10. All Beacons confirm with FLASH but FAIL is on	a. False no-failure in monitor signal	a. Check Beacons for continuous monitor signal. . Replace controller board PCB-1.
	b. False signal on monitor line	b. Check that Beacon 3, Tier 0 position is not programmed. . Check monitor cable and Beacons for short to ac or dc voltage.
11. Faulty Beacon with no FLASH indication but no FAIL indication	a. Faulty failure detection function	a. Replace controller board PCB-1.
	b. Overlapping confirmation from another Beacon	b. Locate improperly programmed Beacon and reprogram its timing and trigger board.
12. Remote alarm not activated by FAIL indication	a. Open coil in fail interrupt relay K2	a. Replace relay K2.

3. Unlock the four slide fasteners that hold the front panel assembly inside the enclosure.
4. Lift the front panel assembly out of the enclosure so its back side is accessible (refer to Figure 5-1).
5. Loosen (do not remove) the screws that secure the spade lug terminals of PCB-1 to terminal block TB3.
6. Loosen (do not remove) the screws that attach the chassis wire terminations to terminal block TB2 (part of PCB-1). Pull back the chassis wires from PCB-1, noting carefully the fan-out arrangement to ensure replacement in the same order.
7. Unlock the two slide fasteners that secure PCB-1 to the front panel assembly, and remove the board.
8. Install the new board into position, making sure all its spade lug terminals are under the screws of terminal block TB3. Secure new board with the two slide fasteners.
9. Tighten the screws in terminal block TB3.
10. Reconnect the chassis wire terminations to terminal block TB2 and tighten its screws.
11. Check that the new board is programmed for your particular system (refer to Paragraphs 2.3 and 2.4).
12. Swing the front panel assembly back into position in the enclosure and secure with the four slide fasteners.
13. Close the enclosure door and secure by tightening the screws of the door clamps.
14. Reconnect the ac input power to the SC-105.

5.3.2 Controller Board Replacement in SC-105R

To replace controller board PCB-1 in the SC-105R System Controller, proceed as follows:

1. Disconnect the ac input power to the SC-105R.
2. Remove front panel screws and pull SC-205R forward in its rack mounting.
3. Loosen the cover screws and slide off the enclosure cover.
4. Disconnect the external wire connections at rear terminal block TB1, and remove the SC-105R from its rack mounting. Place the SC-105R on a convenient working surface.
5. Loosen (do not remove) the screws that secure the spade lug terminals of PCB-1 to terminal block TB3 (refer to Figure 5-3).
6. Loosen (do not remove) the screws that attach the chassis wire terminations to terminal block TB2 (part of PCB-1). Pull back the

chassis wires from PCB-1, noting carefully the fan-out arrangement to ensure replacement in the same order.

7. Unlock the two slide fasteners that secure PCB-1 to the chassis and remove the board.
8. Install the new board into position, making sure all its spade lug terminals are under the screws of terminal block TB3. Secure new board with the two slide fasteners.
9. Tighten the screws in terminal block TB3.
10. Reconnect the chassis wire terminations to terminal block TB2 and tighten its screws.
11. Check that the new board is programmed for your particular system (refer to Paragraphs 2.3 and 2.4).
12. Set the SC-105R in its rack mounting to reconnect the external wire connections at rear terminal block TB1.
13. Slide the cover on the enclosure and secure by tightening the cover screws.
14. Push the SC-105R back into its rack mounting and secure with the front panel screws.
15. Reconnect the ac input power to the SC-105R.

5.4 DRAWINGS

The following drawings are included to facilitate signal tracing in the System Controller:

Figure 5-4	SC-105/SC-105R System Controller, Wiring Diagram
Figure 5-5	2600 Series Controller Board, Schematic Diagram
Figure 5-6	SC-105/SC-105R System Controller, Timing Diagram

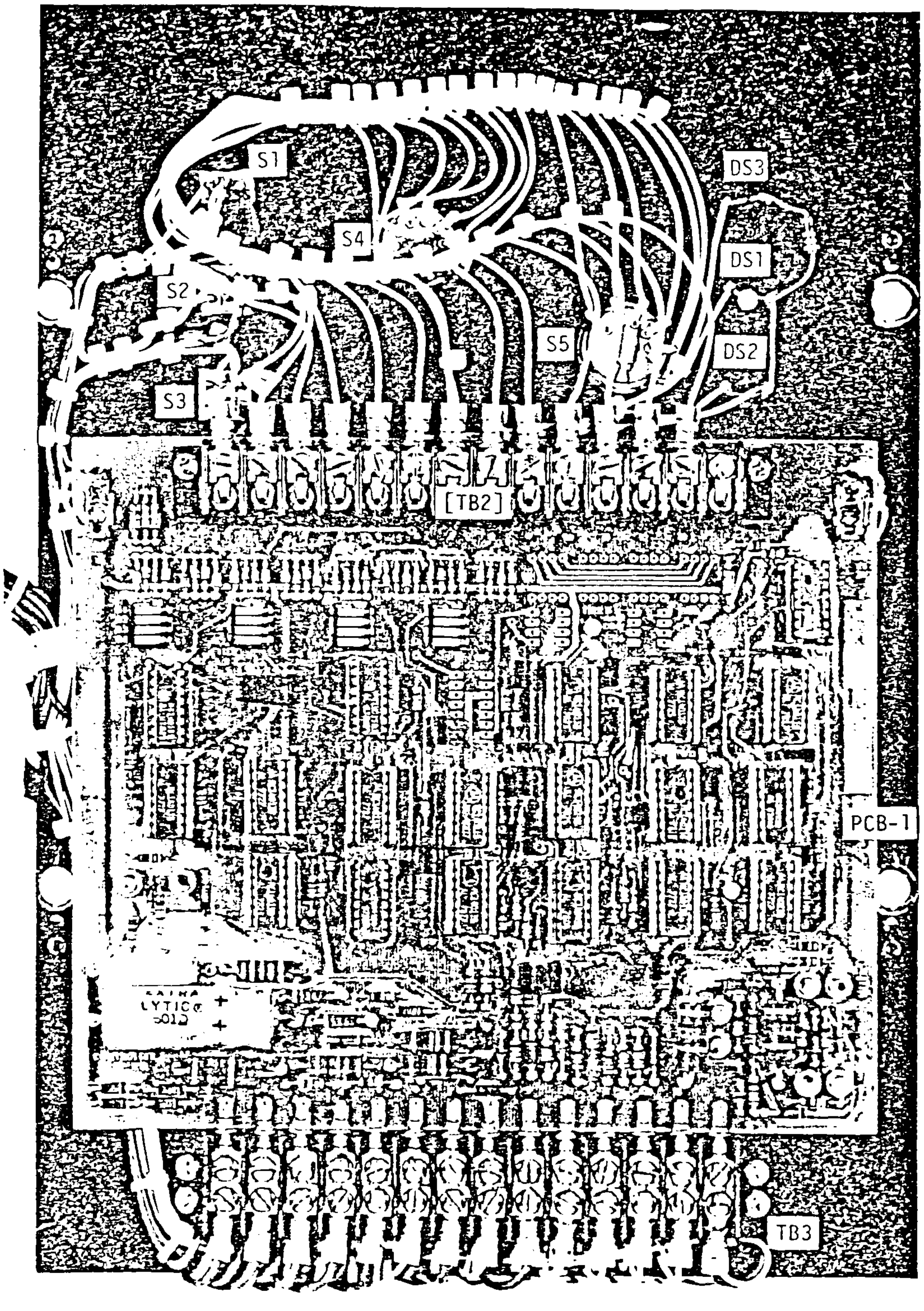

Figure 5-1. Rear View of SC-105 Front Panel Assembly

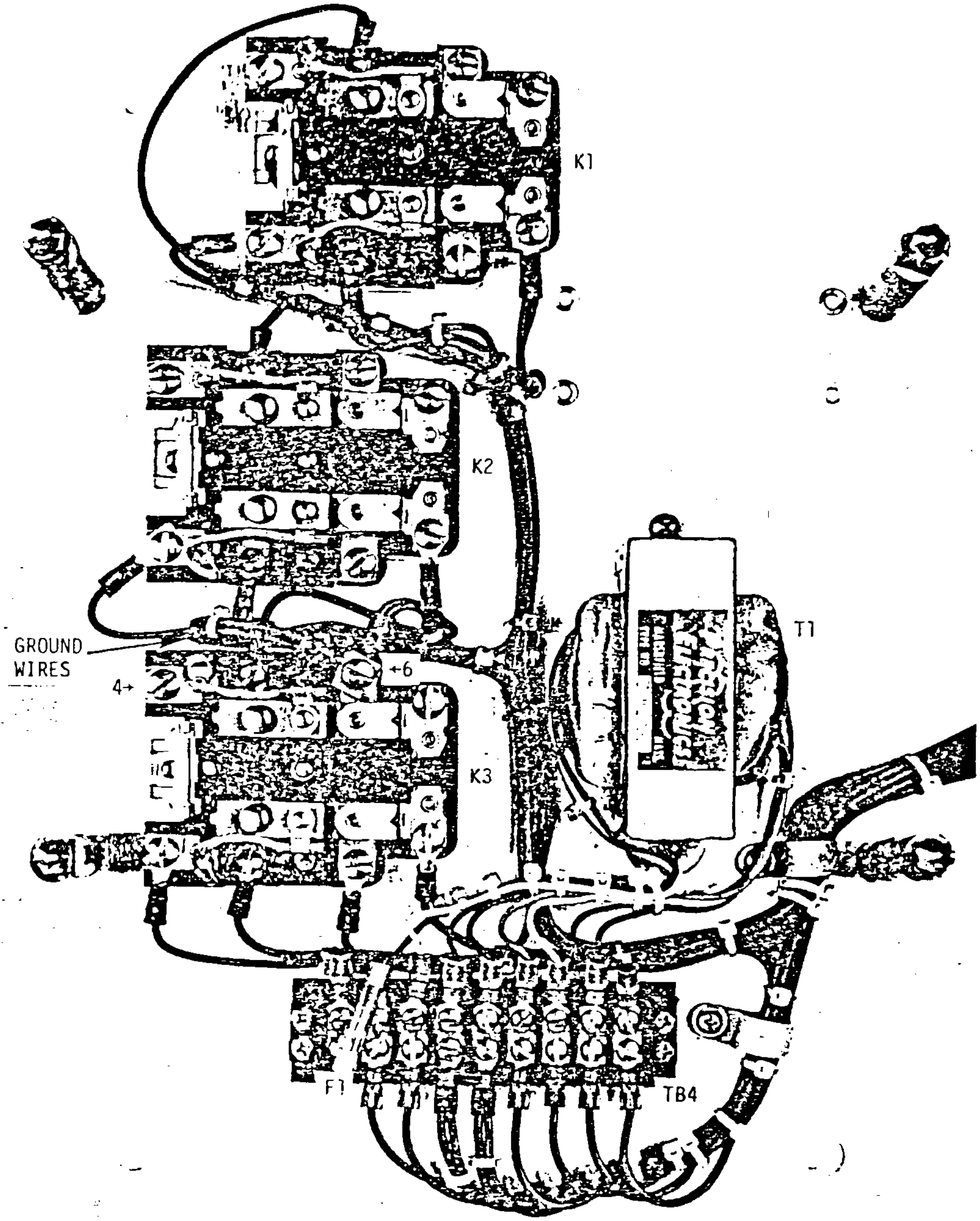

K3 ABOVE SHOWN WIRED FOR AUTO RESET WITH GROUND WIRES (A PAIR) CONNECTED TO TERMINAL 6. ALTERNATE WIRING FOR MANUAL RESET OPTION HAS GROUND WIRES CONNECTED TO TERMINAL 4. REFER TO WIRING DIAGRAM (FIGURE 5-4).

Figure 5-2. Front View of SC-105 Rear Panel Assembly

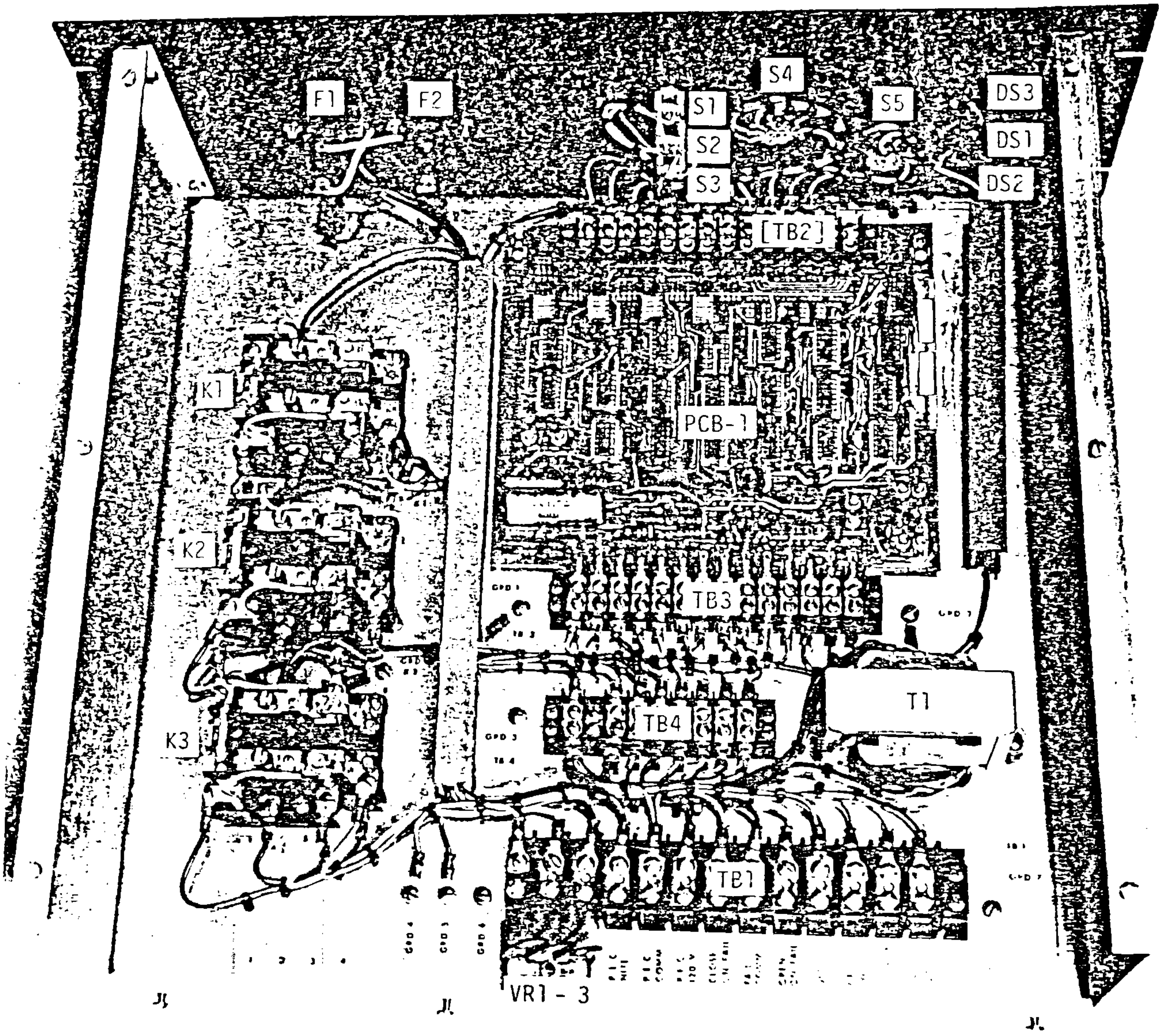

Figure 5-3. Interior View of SC-105R

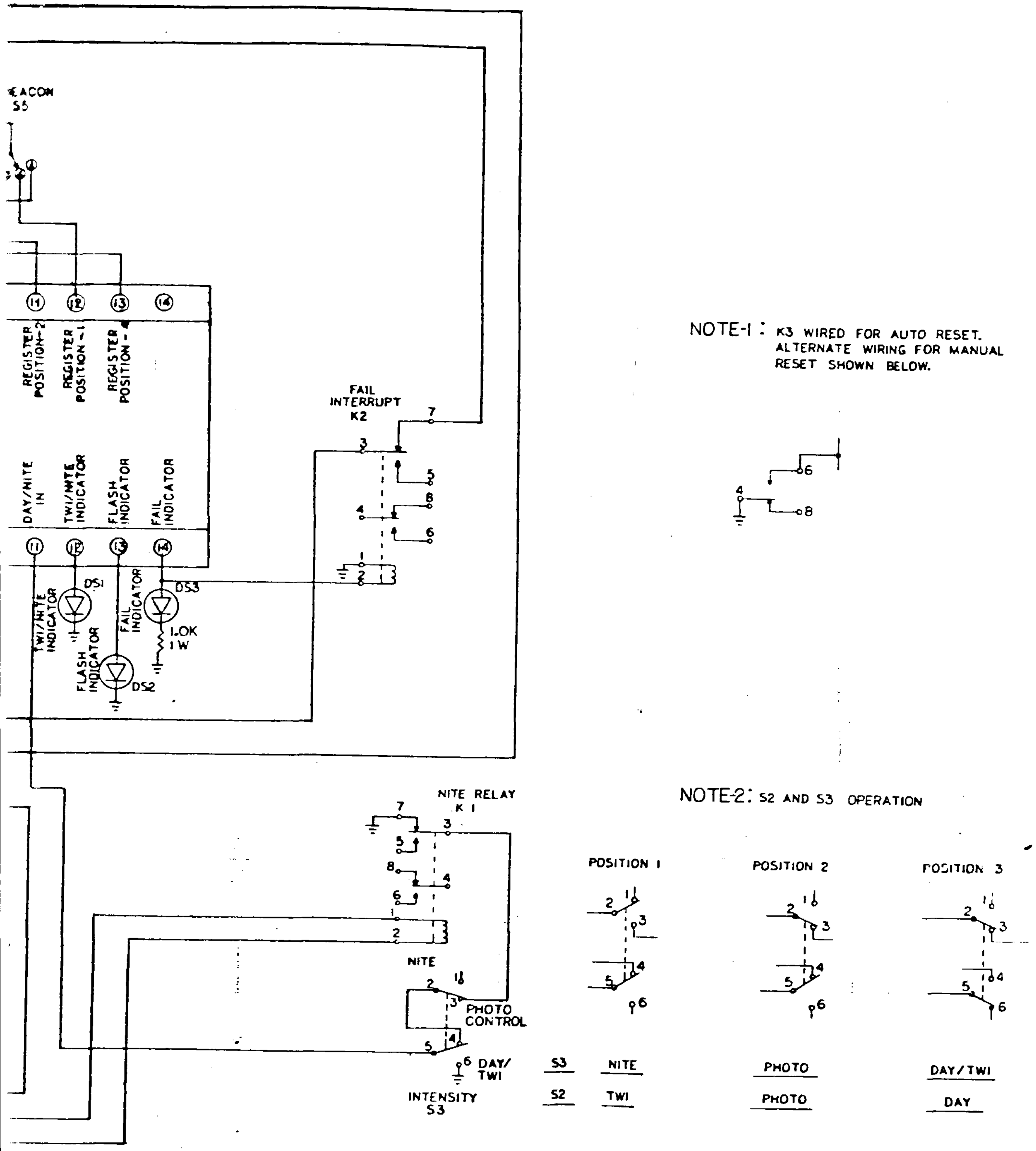

Figure 5-4. SC-105/SC-105R System Controller Wiring Diagram (D-3148)

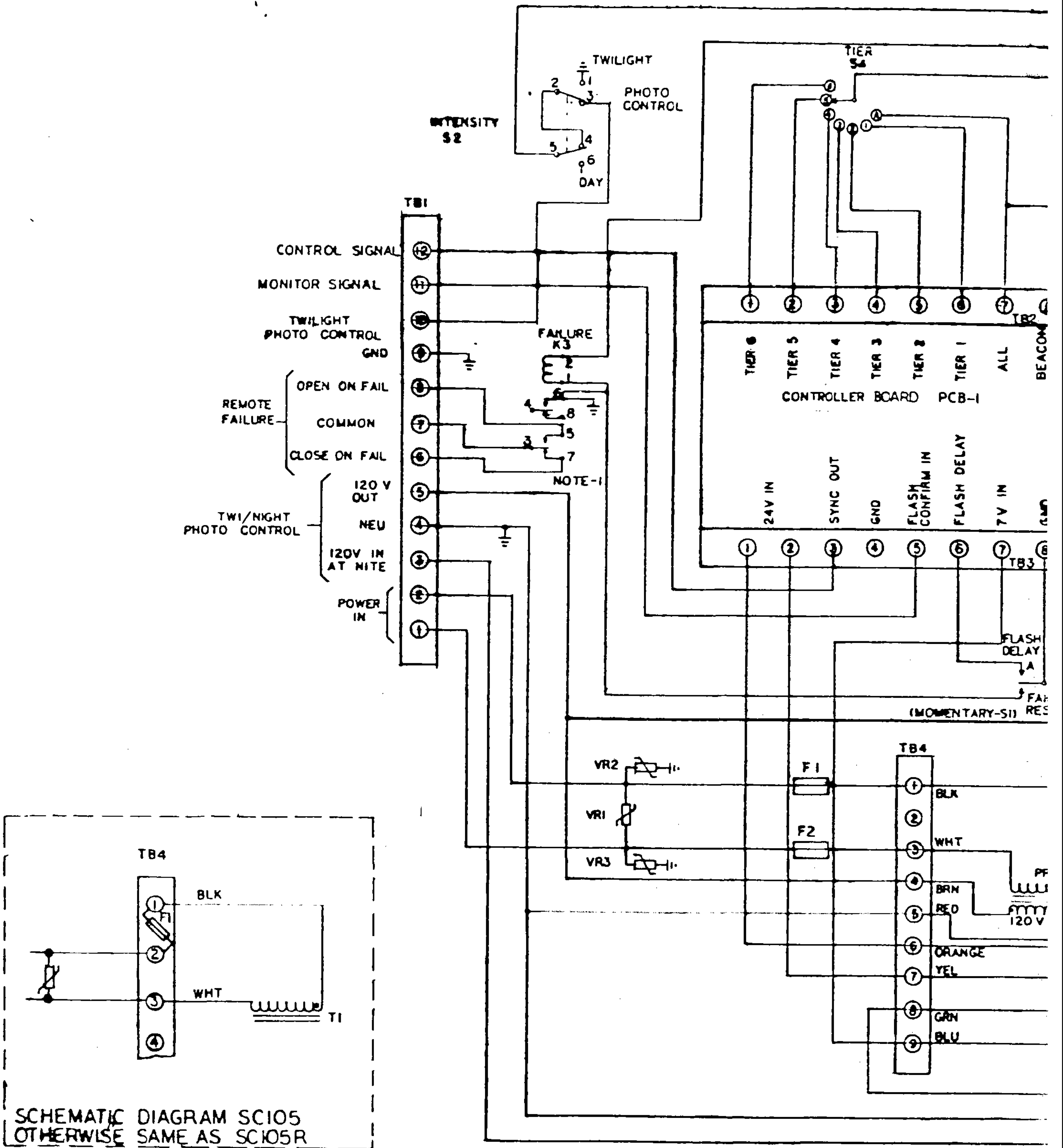

SCHEMATIC DIAGRAM SC105
OTHERWISE SAME AS SC105R

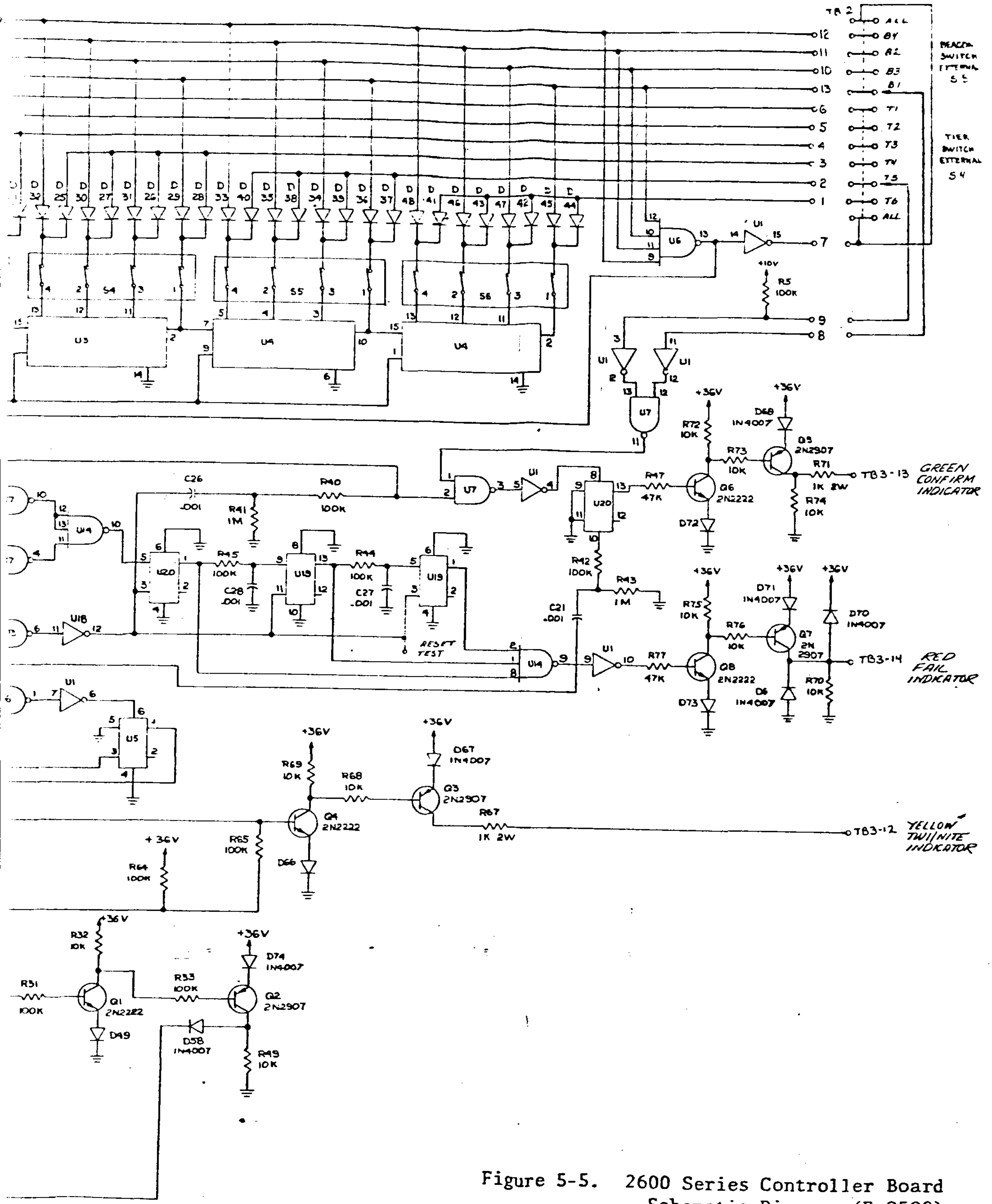

Figure 5-5. 2600 Series Controller Board Schematic Diagram (E-2598)

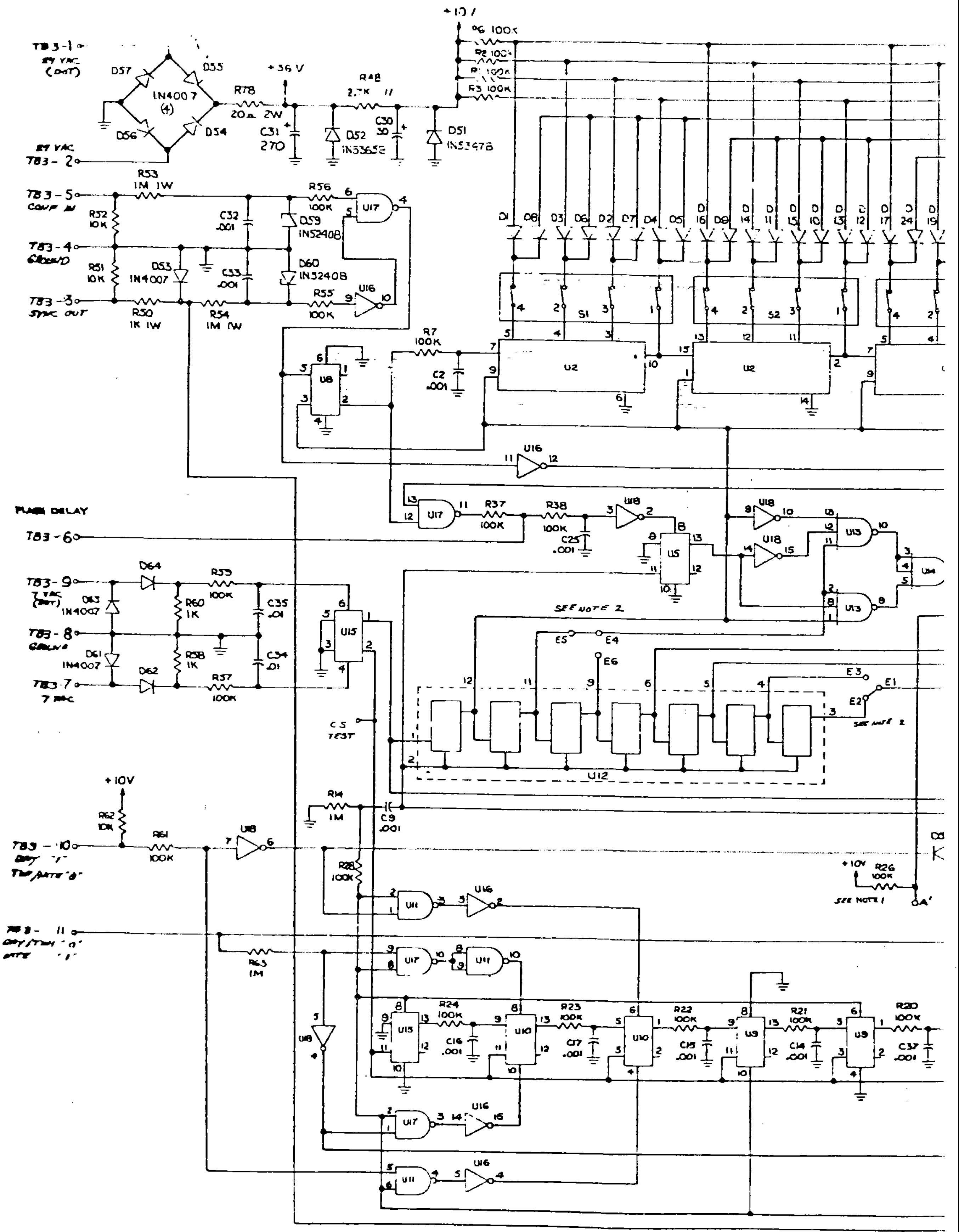
TB3-1
27 VAC (OUT)
D57
D55
IN4007 (4)
D56
D54
27 VAC
TB3-2
R78 20Ω 2W
+36 V
C31 270
D52 IN5365B
R48 2.7K
C30 50
D51 IN5347B
+10 V
R6 100K
R2 100K
R1 100K
R3 100K
TB3-5 COMP IN
R53 1M 1W
R52 10K
TB3-4 GROUND
R51 10K
TB3-3 SYNC OUT
R50 1K 1W
D53 IN4007
R54 1M 1W
C32 .001
C33 .001
D59 IN5240B
D60 IN5240B
R56 100K
R55 100K
U17
U16
U8
R7 100K
C2 .001
D1 D8 D3 D6 D2 D7 D4 D5 D16 D9 D14 D11 D15 D10 D13 D12 D17 D24 D19
S1
S2
U2
U16
PHASE DELAY
TB3-6
U17
R37 100K
R38 100K
C25 .001
U18
U5
U18
U13
U14
TB3-9 7 VAC (OUT)
D64
D63 IN4007
R60 1K
R59 100K
C35 .01
TB3-8 GROUND
D61 IN4007
R58 1K
C34 .01
TB3-7 7 VAC
D62
R57 100K
U15
SEE NOTE 2
E5 E4 E6
E3 E1 E2
SEE NOTE 2
C.S. TEST
U12
R14 1M
C9 .001
+10V
R62 10K
TB3-10 DAY "1" TOP/DATE "0"
R61 100K
U18
R28 100K
U11
U16
+10V R26 100K
SEE NOTE 1
A'
TB3-11 DAY/TIME "0" DATE "1"
R63 1M
U17
U11
U18
U15
R24 100K
C16 .001
U10
R23 100K
C17 .001
U10
R22 100K
C15 .001
U9
R21 100K
C14 .001
U9
R20 100K
C37 .001
U17
U16
U11
U16

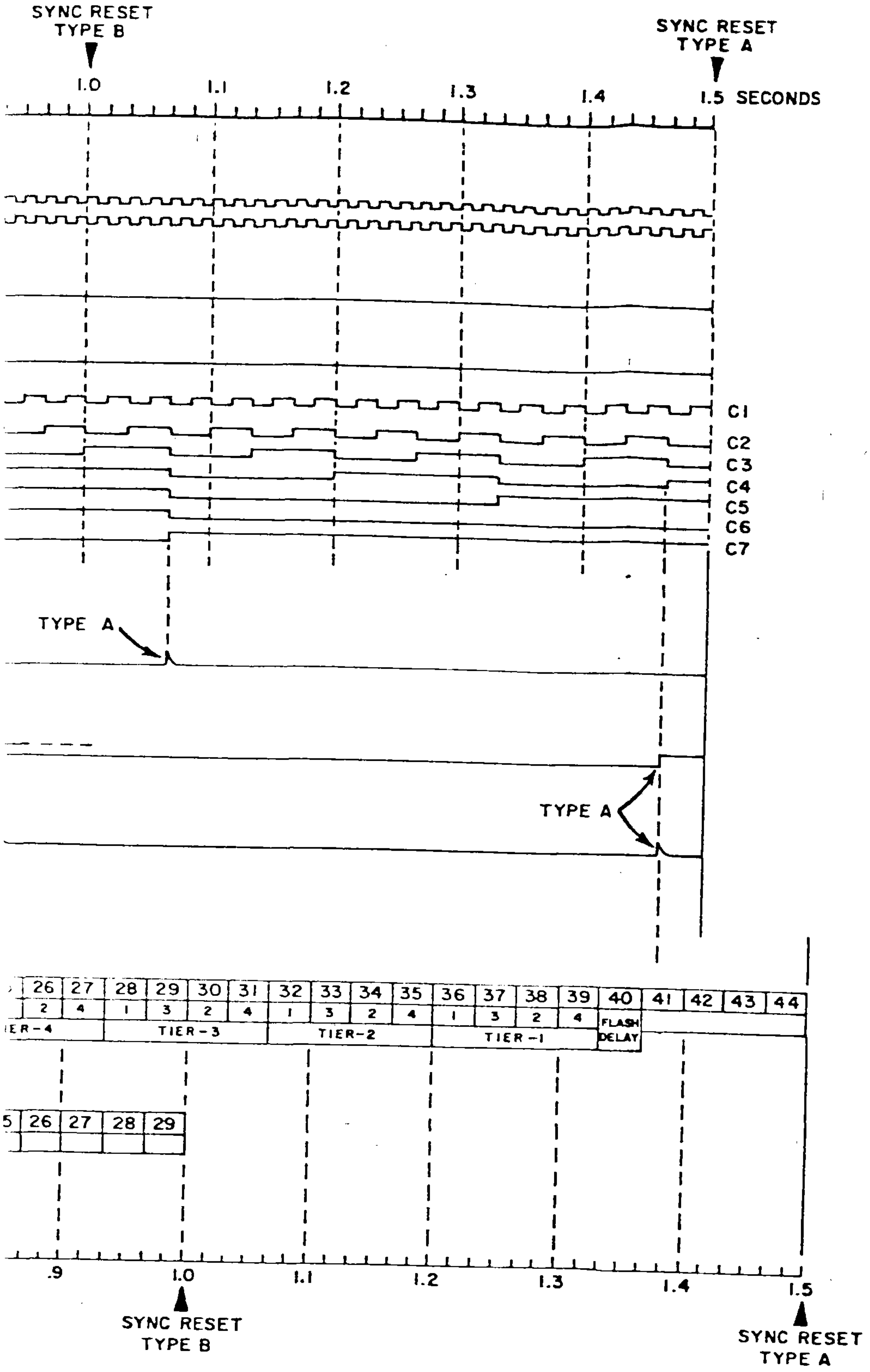

Figure 5-6. SC-105/SC-105R System Controller Timing Diagram (60 Hz)

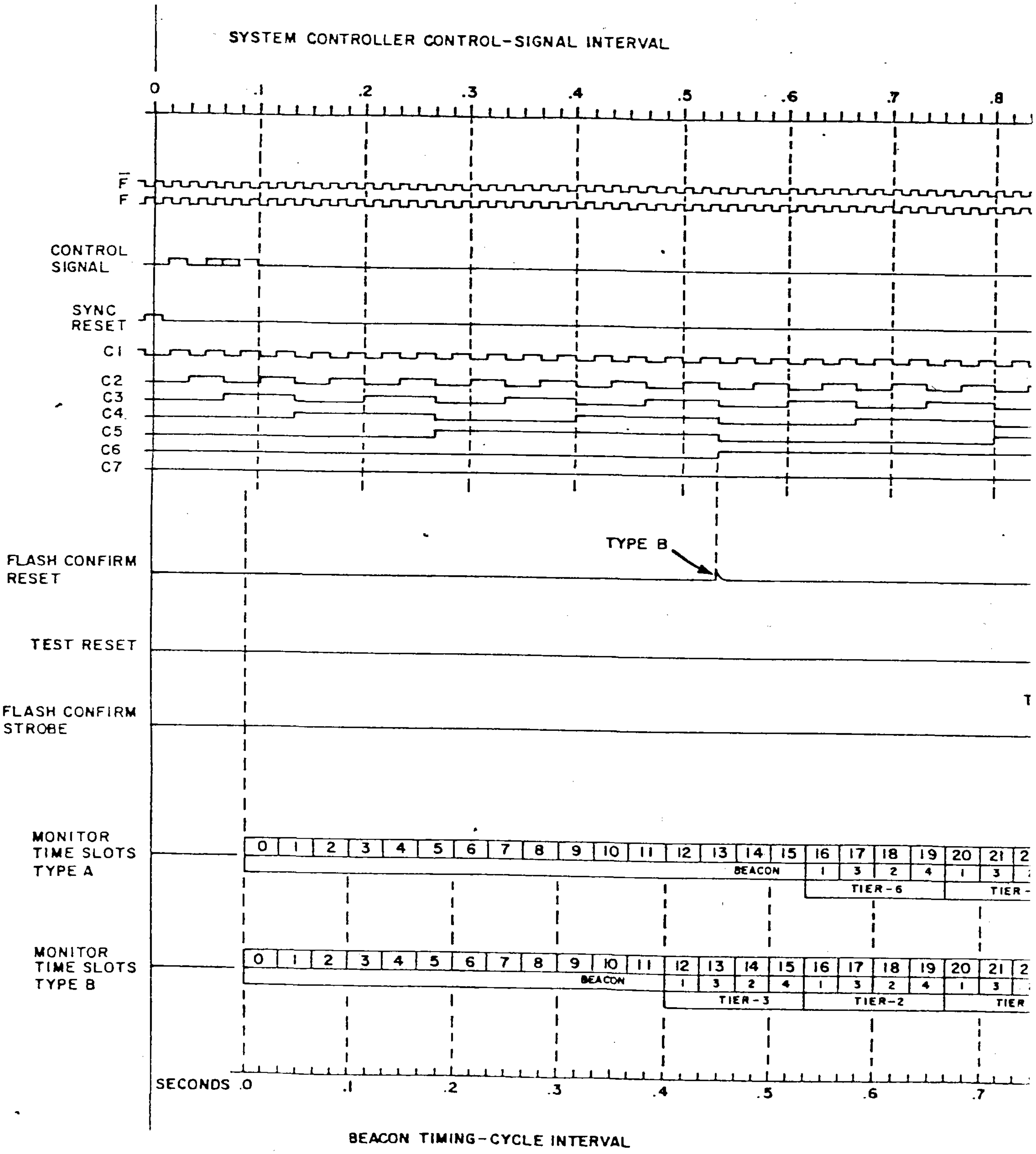
SYSTEM CONTROLLER CONTROL-SIGNAL INTERVAL
0
.1
.2
.3
.4
.5
.6
.7
.8
$\overline{F}$
F
CONTROL SIGNAL
SYNC RESET
C1
C2
C3
C4
C5
C6
C7
TYPE B
FLASH CONFIRM RESET
TEST RESET
FLASH CONFIRM STROBE
MONITOR TIME SLOTS TYPE A
0 1 2 3 4 5 6 7 8 9 10 11 12 13 14 15 16 17 18 19 20 21 2
BEACON
1 3 2 4 1 3
TIER-6
TIER-
MONITOR TIME SLOTS TYPE B
0 1 2 3 4 5 6 7 8 9 10 11 12 13 14 15 16 17 18 19 20 21 2
BEACON
1 3 2 4 1 3 2 4 1 3
TIER-3
TIER-2
TIER
SECONDS .0
.1
.2
.3
.4
.5
.6
.7
BEACON TIMING-CYCLE INTERVAL

SECTION 6

PARTS LISTS

6.1 RECOMMENDED SPARE PARTS

Quantity	Description	Part Number	Manufacturer
3	Fuse (for SC-105 only)		
	1 A (120 V units)	2778-01	FTCA
	1/2 A (208/240 V units)	2778-02	FTCA
	1/4 A (480 V units)	2778-03	FTCA
1 box of 5	Fuse (for SC-105R only)		
	1 A (120 V units)	KTK-1	Bussmann
1	Controller Board Assy	2600-*	FTCA
3	Varistor, Metal Oxide		
	(120 V units)	2508-01	FTCA
	(208/240 V units)	2508-02	FTCA
	(480 V units)	2508-04	FTCA

---

*Denotes a variable assembly; select part number that matches assembly installed in your System Controller (refer to Preface of this instruction manual).

6.2 ELECTRICAL REPLACEABLE PARTS (50/60 Hz systems)

Designation	Description	Part Number	Manufacturer
DS1	Light Emitting Diode, amber	MV5353	Monsanto
DS2	Light Emitting Diode, green	MV5253	Monsanto
DS3	Light Emitting Diode, red	MV5053	Monsanto
F1	Fuse (for SC-105 only)		
	1 A (120 V units)	2778-01	FTCA
	1/2 A (208/240 V units)	2778-02	FTCA
	1/4 A (480 V units)	2778-03	FTCA
F1,F2	Fuse (for SC-105R only)		
	1 A (120 V units)	KTK-1	Bussmann
K1,K3	Relay, DPDT, 120 Vac	3288-02	FTCA
K2	Relay, DPDT, 24 Vdc	3288-01	FTCA
PCB-1	Controller Board Assy	2600-*	FTCA
S1	Switch, toggle, SPDT	MST-106G	Alcoswitch
S2,S3	Switch, DPDT	MST-206PA	Alcoswitch
S4	Switch, rotary	24001-7	Grayhill
S5	Switch, rotary	24001-5	Grayhill
T1	Power Transformer, 50/60 Hz		
	(120 V units)	3314	FTCA
	(208 V units)	3322	FTCA
	(240 V units)	3316	FTCA
	(380 V units)	3324	FTCA
	(480 V units)	3318	FTCA
TB1	Terminal Block, 12-contact	3289-12	FTCA
TB3	Terminal Block, 14-contact	3290-14	FTCA
TB4	Terminal Block, 9-contact	3290-09	FTCA
VR1,VR2,VR3	Varistor, Metal Oxide		
	(120 V units)	2508-01	FTCA
	(208/240 V units)	2508-02	FTCA
	(480 V units)	2508-04	FTCA

---

*Denotes a variable assembly; select part number that matches assembly installed in your System Controller (refer to Preface of this instruction manual).

SECTION 7

SUPPLEMENTARY DATA

The following pages contain instructions for the options which have been included in your System Controller.

LIGHTING CONTROL INSTRUCTIONS

PEC-405 PHOTOELECTRIC LIGHTING CONTROL
LIGHTING CONTROL INSTRUCTIONS

TABLE OF CONTENTS

		Page
SECTION 1	GENERAL INFORMATION	
1.1	Introduction	1-1
1.2	General Description	1-1
1.3	Specifications	1-1
SECTION 2	INSTALLATION	
2.1	Interconnections and Mounting	2-1
SECTION 3	MAINTENANCE	
3.1	Preventive Maintenance	3-1
3.2	Troubleshooting	3-1

LIST OF FIGURES

Figure		Page
1-1	PEC-405 Photoelectric Lighting Controls	1-2
2-1	Identification of Socket Blade Connections	2-1
2-2	Outline Drawing of Ganged PEC-405 Controls	2-2

SECTION 1

GENERAL INFORMATION

1.1 INTRODUCTION

These instructions contain information for understanding, installing, and maintaining the ElectroFlash PEC-405 Photoelectric Lighting Control. Two PEC-405 controls are used as part of FAA approved ElectroFlash Beacon Systems for L-856 high-intensity obstruction lighting applications in accordance with FAA Advisory Circular 150/5345-43. The two controls (one Twilight and one Night) sense the sky illumination in the automatic control of the Coruscating Beacons' flashing intensity during the day, twilight, and night.

1.2 GENERAL DESCRIPTION

Figure 1-1 shows a typical PEC-405 Photoelectric Lighting Control. Each control consists of a photoelectric head assembly (housed in a standard watt-hour meter case) that plugs into a standard four-blade meter socket. The photoelectric head assembly is manufactured by Sigma Instruments Inc. but is calibrated by FTCA to the light sensitivity for use as a Twilight or a Night control. Functionally, a PEC-405 control consists of a photocell and a relay, arranged so changes in incident light make the relay contacts close and open.

1.3 SPECIFICATION

1.3.1 Light Sensitivities

Twilight Control (P/N PEC-405-T)

- 40-footcandle(431-lux) nominal sensitivity
- Relay de-energizes when illumination decreases to range between 60 and 0 footcandles (646 and 323 lux)
- Relay energizes when illumination increases to range between 30 and 60 footcandles (323 and 646 lux)

Night Control (P/N PEC-405-N)

- 4-footcandle (43-lux) nominal sensitivity
- Relay de-energizes when illumination decreases to range between 5 and 2 footcandles (54 and 22 lux)
- Relay energizes when illumination increases to range between 2 and 5 footcandles (22 and 54 lux)

1.3.2 Relay Output

- SPDT contacts
- 3000-watt maximum load at N.C. contacts
- 2000-watt maximum load at N.O. contacts

1.3.3 Electrical Input

- 105 to 130 volts, 50/60 Hz, single phase
- Negligible power to energize control (excludes relay contact load)

1.3.4 Mechanical Characteristics

- 6-7/8 inches (175 mm) in diameter by 5-11/16 inches (144 mm) in depth
- 4.5 pounds (2.0 kg)

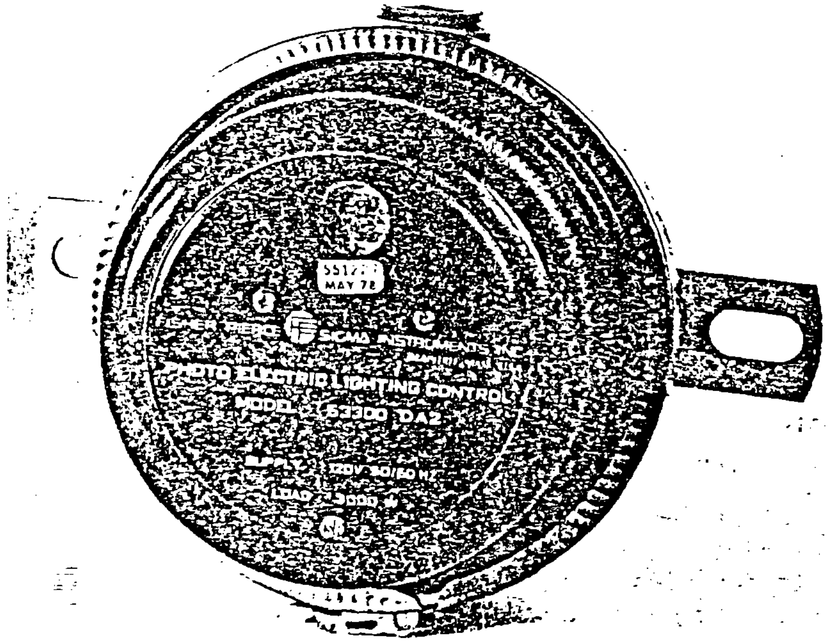

Figure 1-1. PEC-405 Photoelectric Lighting Control

SECTION 2

INSTALLATION

2.1 INTERCONNECTIONS AND MOUNTING

Figure 2-1 identifies the terminals of a PEC-405 Photoelectric Lighting Control as viewed when looking at the blade connections in the meter socket. Figure 2-2 shows the outline and mounting dimensions for two PEC-405 controls ganged as Twilight and Night units. Refer to Section 2 of the System Instructions for placement information. To mount these controls,

1. Fasten the meter sockets to the mounting surface by means of mounting strap attached to each socket.
2. Wire the sockets to the System Controller. Refer to system wiring diagram in System Instructions for interconnection details.
3. Plug in each photoelectric head assembly into its meter socket.
4. Position clamp ring around head assembly with snap lock facing downward to prevent rain seepage. Lock clamp ring securely.

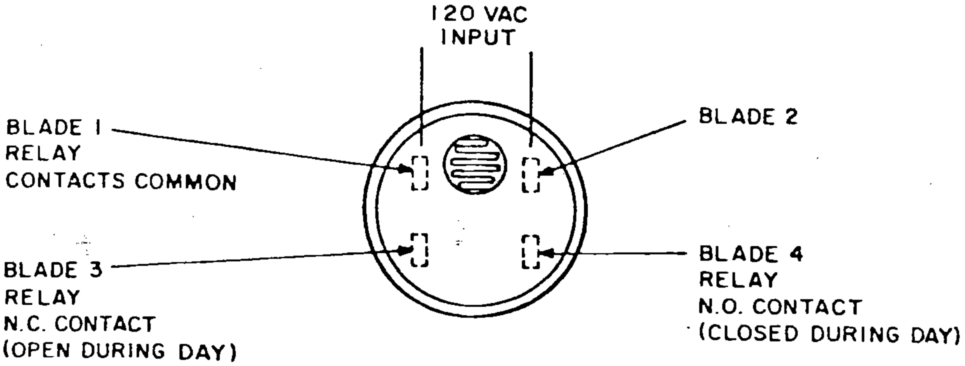

Figure 2-1. Identification of Socket Blade Connections

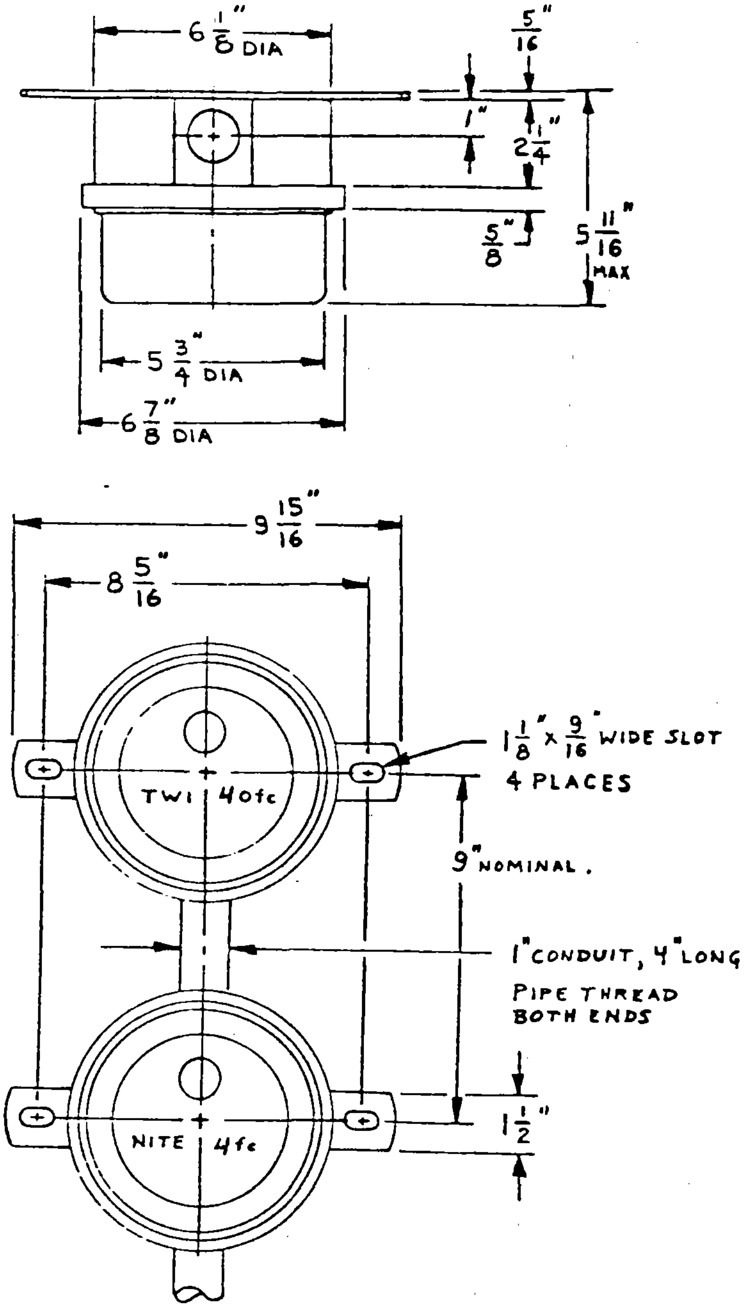

Figure 2-2. Outline Drawing of Ganged PEC-405 Controls (A-1360)

SECTION 3

MAINTENANCE

3.1 PREVENTIVE MAINTENANCE

Keep the face of each photoelectric head assembly clean so the light sensitivity of the control will not be affected appreciably. How often a head assembly will need cleaning will depend on the environment at the site. A convenient method of cleaning is to use a squeeze bottle of a commercially available window cleaner. Spray the head assembly and then wipe it clean with a soft cloth or paper towel.

3.2 TROUBLESHOOTING

If a PEC-405 control is suspected to be faulty, check its operation as follows:

1. Expose the control to bright light while powered from 120 volts ac.
2. Place an opaque cover over the control.
3. Listen for its relay to click upon de-energizing. The click should be heard between 2 and 4 seconds after covering the control; otherwise the control is faulty.
4. Remove the opaque cover from off the control.
5. Listen for its relay to click upon energizing. The click should be heard between 2 and 4 seconds after uncovering the control; otherwise the control is faulty.

BEACON INSTRUCTIONS

FTB-205-1A CORUSCATING BEACON
BEACON INSTRUCTIONS
TABLE OF CONTENTS

	Page
SECTION 1 GENERAL DESCRIPTION	
1.1 Introduction	1-1
1.2 Physical Description	1-1
1.3 Specifications	1-1
1.4 Options	1-4
SECTION 2 INSTALLATION	
2.1 Placement Considerations	2-1
2.2 Layout and Mounting	2-1
2.3 Interconnection Wiring	2-3
SECTION 3 OPERATION	
3.1 Operating Procedure	3-1
3.2 Monitoring Procedure	3-1
SECTION 4 PRINCIPLES OF OPERATION	
4.1 Overall Circuit Description	4-1
4.2 Energy Storage Circuit Description	4-2
4.3 Optical Head Assembly Description	4-4
4.4 Timing and Trigger Circuit Description	4-5
SECTION 5 MAINTENANCE	
5.1 Preventive Maintenance	5-1
5.2 Troubleshooting	5-1
5.3 Major Component Replacements	5-8
5.4 Reflector Cleaning	5-10
5.5 Drawings	5-12
SECTION 6 PARTS LISTS	
6.1 Recommended Spare Parts	6-1
6.2 Electrical Replaceable Parts	6-2
SECTION 7 SUPPLEMENTARY DATA	7-1

LIST OF FIGURES

Figure		Page
1-1	Outside View of Coruscating Beacon	1-2
2-1	Outline Drawing of Coruscating Beacon	2-2
2-2	Wiring Terminations of a Typical Coruscating Beacon	2-3
4-1	Overall Block Diagram of Coruscating Beacon	4-3
4-2	Block Diagram of Timing and Trigger Board	4-7
4-3	Component-Side View of Timing and Trigger Board	4-13
5-1	Component Locations on Power Converter Chassis	5-9
5-2	Component Locations on Optical Head Assembly	5-11
5-3	Coruscating Beacon, Wiring Diagram	5-13
5-4	High-Voltage Rectifier Board, Schematic Diagram	5-15
5-5	Timing and Trigger Board, Schematic Diagram	5-17
5-6	Coruscating Beacon Digital Signals, Timing Diagram	5-19

LIST OF TABLES

Table		Page
4-1	Reset and Keying Timing for FTB-205A System	4-11
4-2	Beacon-Tier Programming for FTB-205A System	4-12
5-1	Major Symptoms of Trouble	5-2
5-2	Possible Sources of Trouble	5-3

SAFETY PRECAUTIONS

This equipment employs voltages which are dangerous and may be fatal if contacted by personnel. Do not change components or make adjustments inside the equipment with the high voltage supply on.

Do not rely on the door interlock switches to remove voltages from within the equipment. Under certain conditions, dangerous potentials may exist in circuits with the ac power off due to charges retained by capacitors. To avoid casualities — always turn off the ac power input, wait for energy storage capacitors to discharge, and then check with a meter for residual charges (refer to Paragraph 5.2.2).

SECTION 1

GENERAL INFORMATION

1.1 INTRODUCTION

These instructions contain information for understanding, installing, operating, and maintaining the ElectroFlash FTB-205-1A Coruscating Beacon. The FTB-205-1A, a product of the Flash Technology Corporation of America, is an obstruction warning beacon that produces high-intensity flashes of white light.

As part of an ElectroFlash Beacon System, FTB-205-1A Coruscating Beacons are approved by the Federal Aviation Administration to provide high-intensity obstruction lighting for Type A systems in accordance with FAA Advisory Circular No. 150/5345-43B. A number of Coruscating Beacons are grouped at different tiers as required for a particular tall structure that presents a potential hazard to air navigation.

1.2 PHYSICAL DESCRIPTION

An FTB-205-1A Coruscating Beacon is contained within a weathertight enclosure with hinged access door (see Figure 1-1). The FTB-205-1A comprises an integrated configuration of an optical head assembly and an associated power converter assembly.

The optical head assembly consists of the flashtube, reflector optics, and trigger transformer mounted on the access door behind its window. Louvers that markedly reduce the light intensity below the flashing beam's centerline are standard. These louvers, along with the specially designed optics, allow pilots to see the full brilliance of each flash, but minimize the light radiating downward to personnel in the local area.

The power converter assembly consists of electrical components that include a power transformer, high-voltage rectifier circuit board, energy storage capacitors, intensity switching relays, and a timing and trigger circuit board. These components mount on a chassis panel near the rear of the enclosure, except the power transformer which mounts directly to the rear inside wall. To aid maintenance, all electrical components and circuit boards are accessible and removable separately toward the front of the enclosure. Or if desired, the power converter chassis may be removed easily as an assembly after disconnecting the interconnection cables and removing four corner nuts.

1.3 SPECIFICATIONS

1.3.1 General

- Automatic day/twilight/night intensity control

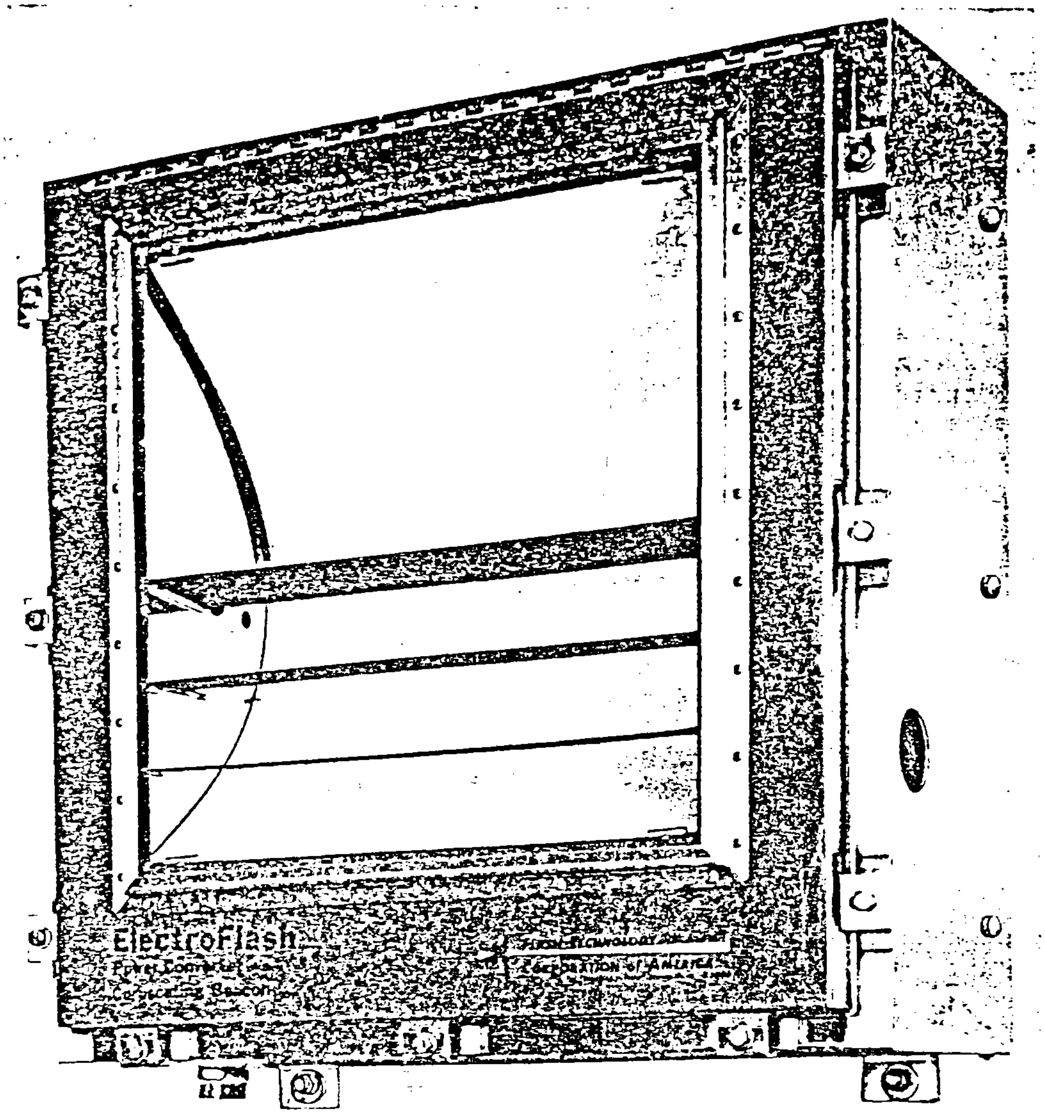

Figure 1-1. Outside View of Coruscating Beacon

- A single, two-wire shielded control-and-monitor cable, parallel connected at Coruscating Beacons
- Solid-state rectifier and logic circuits
- Replaceable parts mounted for easy servicing
- High-gain optical system that results in a high-intensity light output while minimizing the electrical power input
- Internally mounted louvers in optics for ground shadowing
- Expanded flash duration at night by a burst of rapid flicks that form a longer apparent flash duration, permitting spatial recognition by the observer where black backgrounds exist

1.3.2 Light Output

- High-intensity white flashing light (xenon gas emission)
- 200,000 effective candelas[1] minimum per flash during the day[2]
- 20,000 ±25% effective candelas[1] per flash during the twilight[2]
- 4,000 ±25% effective candelas[1] per flash during the night[2]
- Simultaneous flashing of all Coruscating Beacons in system at 40 flashes per minute
- Directional flashing-beam profile
  - 3 degrees vertical beam spread with sharp cutoff of downward radiation
  - 120 degrees horizontal beam spread; three or more Coruscating Beacons provide 360 degrees horizontal coverage
- Beam elevation-angle indicator in each Coruscating Beacon to facilitate adjustable alignment of vertical beam-spread peak from -2 to +8 degrees with respect to horizontal

1.3.3 Electrical Input

480 volts, 60 Hz, single phase
190 watts average per Coruscating Beacon; 380 voltamperes average; 600 voltamperes peak

1.3.4 Mechanical Characteristics

NEMA 4 type enclosure, stainless steel 304
24 inches (610 mm) wide by 24 inches (610 mm) high by 9.75 inches (248 mm) deep
120 pounds (54.4 kg)

---

[1] "IES Guide for Calculating the Effective Intensity of Flashing Signal Lights," published in *Illumination Engineering*, Volume LIX, page 747, November 1964.

[2] Each daytime or twilight flash is a single flick. Each nighttime flash is a burst of flicks providing a longer apparent flash duration (0.25 second).

1.4 OPTIONS

1.4.1 Electrical Input

- 120, 208, or 240 volts, 60 Hz, single phase
- 120, 230, 240, 380, or 480 volts, 60 Hz, single phase

1.4.2 Enclosure

- Stainless steel 304L
- Stainless steel 316L
- White polyurethane protected aluminum 5052-H32, stainless steel hardware

1.4.3 Mounting Accessories

- Beam elevation adjustment brackets — for adjustable alignment of vertical beam-spread peak from -2 to +8 degrees with respect to horizontal
- Beacon mounts — for adapting enclosure mounting (including beam elevation adjustment brackets if used) to skeletal structures

SECTION 2

INSTALLATION

2.1 PLACEMENT CONSIDERATIONS

Coruscating Beacons are supplied pre-programmed for their particular locations in a system. When shipped, Coruscating Beacons are identified for proper location (Beacon No. and Tier No.) by markings on the shipping boxes. At installation, Coruscating Beacons must be located as marked so they can be identified and monitored properly by the System Controller. However, if a Coruscating Beacon is installed in the wrong location by mistake, you can re-program its timing and trigger board for that location (refer to Table 4-2 for Beacon-Tier programming).

Use the System Installation Form included in the System Instructions of this manual for recording the locations of the Coruscating Beacons in the system. Note that the lowest tier is usually designated as Tier 1. The Coruscating Beacon in each tier that is installed nearest to true North is designated as Beacon 1, with progressively higher numbered designations in a clockwise direction (Beacon 2 being in an easterly direction).

2.2 LAYOUT AND MOUNTING

Outline and mounting dimensions for a Coruscating Beacon are shown in Figure 2-1. This enclosure may be secured to its support by four 3/8-inch diameter bolts. Note that the enclosure has four mounting tabs, two with holes at the top and two with slots at the bottom. This arrangement facilitates installation (or replacement) since the lower mounting bolts may be put in place and the enclosure supported by them while the upper bolts are inserted and tightened. Mount the enclosure vertically so the cable connections and the drain hole are at the bottom; leave 2 inches (50.8 mm) minimum of rear clearance for cooling.

Coruscating Beacons may be mounted directly to flat surfaces by using the four mounting tabs at the rear of the enclosure and suitable spacers. Or, Coruscating Beacons may be mounted to skeletal legs (round or angular) of a structure by installing an optional adapter mount between the Beacon and the supporting leg.

When elevation tilting of a Coruscating Beacon's flashing beam is a system requirement, install a pair of beam elevation adjustment brackets between the Beacon and its flat surface support (or adapter mount). These brackets enable a -2 to +8 degree tilt (or +2 to -8 degree tilt by bracket reversal) of the flashing beam from the horizontal when the brackets are mounted on a vertical surface.

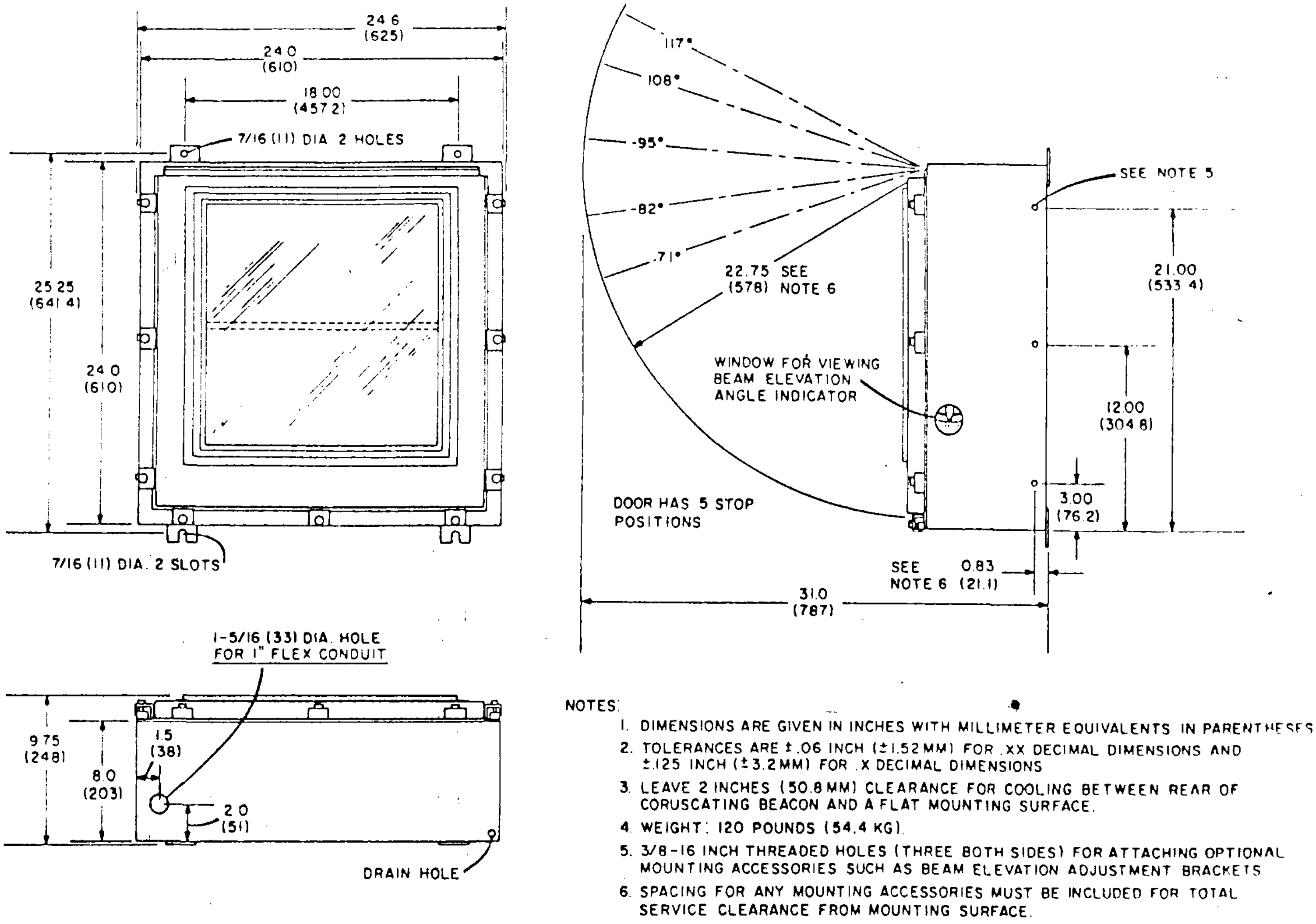

NOTES:

1. DIMENSIONS ARE GIVEN IN INCHES WITH MILLIMETER EQUIVALENTS IN PARENTHESES
2. TOLERANCES ARE ±.06 INCH (±1.52MM) FOR .XX DECIMAL DIMENSIONS AND ±.125 INCH (±3.2MM) FOR .X DECIMAL DIMENSIONS
3. LEAVE 2 INCHES (50.8MM) CLEARANCE FOR COOLING BETWEEN REAR OF CORUSCATING BEACON AND A FLAT MOUNTING SURFACE.
4. WEIGHT: 120 POUNDS (54.4 KG).
5. 3/8-16 INCH THREADED HOLES (THREE BOTH SIDES) FOR ATTACHING OPTIONAL MOUNTING ACCESSORIES SUCH AS BEAM ELEVATION ADJUSTMENT BRACKETS
6. SPACING FOR ANY MOUNTING ACCESSORIES MUST BE INCLUDED FOR TOTAL SERVICE CLEARANCE FROM MOUNTING SURFACE.

Figure 2-1. Outline Drawing of Coruscating Beacon

2.3 INTERCONNECTION WIRING

Power and signal connections to a Coruscating Beacon are made through a conduit fitting at the bottom of the enclosure. Figure 2-2 shows the terminal block terminations for the interconnection wiring.

Refer to the System Instructions section of this manual for typical wiring interconnections and requirements. Note that the control and monitor signals are transmitted between the System Controller and the parallel-connected Coruscating Beacons over a shielded pair of twisted wires (made possible by the use of a time-shared digital technique).

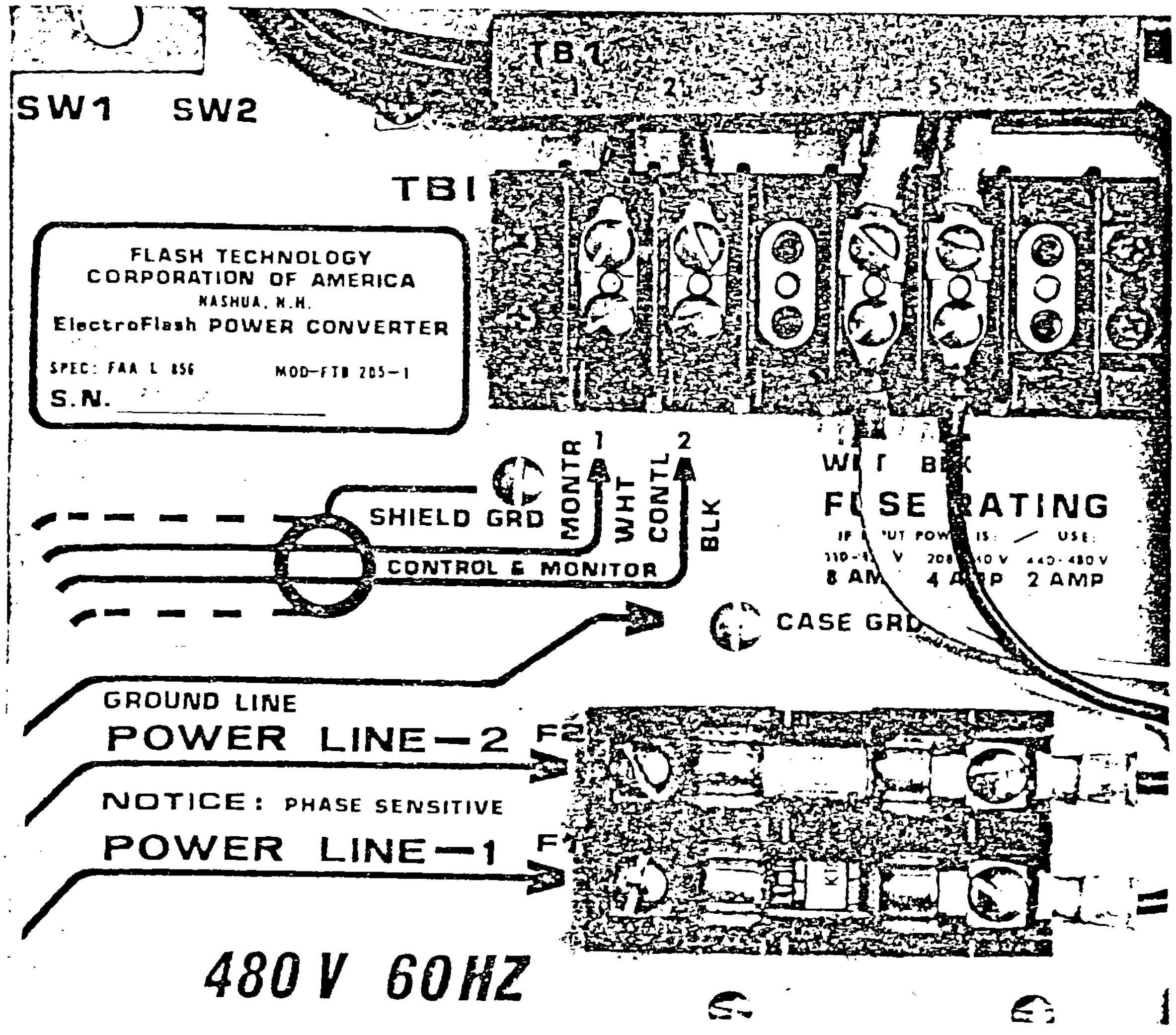

Figure 2-2. Wiring Terminations at a Typical Coruscating Beacon

SECTION 3

OPERATION

3.1 OPERATING PROCEDURE

After power turn-on at the system's main disconnect switch, the normal operation of the Coruscating Beacons is completely automatic. All switches and indicators for manual control of the Coruscating Beacons are located on the System Controller of the ElectroFlash Beacon System. Refer to the Controller Instructions in this manual for operating information.

3.2 MONITORING PROCEDURE

Monitor the flash operation of the Coruscating Beacons at the System Controller. In a system, each Coruscating Beacon is identified by its particular BEACON and TIER location. Refer to the System Installation Form in the System Instructions of this manual for the Beacon-Tier location assignments.

SECTION 4

PRINCIPLES OF OPERATION

4.1 OVERALL CIRCUIT DESCRIPTION

A Coruscating Beacon consists of an optical head assembly and a power converter assembly (see Figure 4-1). With its integral power converter assembly, each Coruscating Beacon is independent; a malfunction of one would not affect another Coruscating Beacon in the system.

In the energy storage circuit of the power converter assembly, the ac input is stepped up by the power transformer and applied to the high-voltage rectifier. The rectified output charges the capacitor bank to a high voltage level after each firing of the flashtube. Each time the flashtube is triggered to fire, the capacitor bank discharges through the sense transformer, flash choke, and the flashtube. Ionization of the flashtube when it fires produces a brilliant flash of light.

The intensity of light produced during each flash is determined by the electrical energy stored in the capacitor bank and discharged through the flashtube. Automatic control for light intensity actuates the DAY-mode and NITE-mode relays to select appropriate amounts of capacitance for the proper energy storage. By energizing either relay or neither, three values of capacitance can be selected for three levels (modes) of light intensity (DAY, TWIlight, or NITE).

In the timing and trigger circuit, the digital control signal from the System Controller is decoded to provide intensity-mode control signals and a synchronizing signal. The presence or absence of the decoded TWI-intensity and NITE-intensity signals determines the energized states for the DAY- and NITE-mode relays.

To generate trigger pulses at the proper flash rate, a flash control function (binary counter) is clocked at the ac power frequency to produce frequency-divided time-interval outputs. These outputs are combined to derive timing pulses at the desired flash interval. The sync signal resets the flash control to synchronize the flashing of Coruscating Beacons in the system. Timing pulses applied to the trigger generator produce low-voltage trigger pulses for the optical head assembly. In this assembly, the high-voltage trigger pulse output from the trigger transformer is sufficient to fire the flashtube into ionization.

To monitor the Coruscating Beacon, a flash confirm function checks for flash occurrences. Each flashtube discharge through the sense transformer produces a flash sense signal, which in turn activates the flash confirm function. From the timing of a programmed selection of binary counter outputs, the flash control function (when activated) generates a monitor signal that occurs at a delayed time corresponding to the

Coruscating Beacon's system location. The resultant timing and presence of the monitor signal output enable the System Controller to identify that Coruscating Beacon and to determine if it is flashing.

4.2 ENERGY-STORAGE CIRCUIT DESCRIPTION

Details of the energy storage circuit are shown in the wiring diagram of the Coruscating Beacon and the schematic diagram of the high-voltage rectifier board. These diagrams are included in Section 5.5 of these instructions.

The ac power input is connected through fuses F1 and F2 and through safety interlock switches SW1 and SW2 to the primary of power transformer T1. Varistor MOV-1 suppresses any high-voltage transients induced across the ac input lines to limit the voltage applied to T1. This transformer utilizes ferro-resonant tuning (with capacitor C4) for output voltage regulation and current limiting. Two low-voltage output windings supply the timing and trigger board (PCB-2) with 110 volts ac at terminals TB4-1 and TB4-10 and 24 volts ac at terminals TB4-2 and TB4-3.

The high-voltage output winding of transformer T1 supplies the high-voltage rectifier board (PCB-1) with a nominal 1400 volts ac at terminals TB3-3 and TB3-10. From a full-wave bridge rectifier on this board, three positive outputs (about 1500 volts) connect through steering diodes and terminals TB3-5, TB3-7, and TB3-8 to the capacitor bank.

Three different values of capacitance can be selected in the capacitor bank to supply the appropriate stored energy for three levels of flash intensity. For DAY-mode intensity, DAY-mode relay K1 is energized but NITE-mode relay K2 is de-energized. This switching selection connects capacitors C2, C3, and C5 in parallel across the output to the flashtube. When the gas in the flashtube is ionized by a trigger pulse, the energy from these capacitors (230 μF) is discharged through the primary of sense transformer T2, flash choke L1, and flashtube FT1. As a result, the largest selected capacitance discharges the highest value of energy through the flashtube to produce the highest level of flash intensity for daytime operation.

For TWI-mode intensity, both DAY-mode relay K1 and NITE-mode relay K2 are de-energized. This switching selection connects only capacitor C5 (30 μF) to the flashtube for a reduced level of flash intensity.

For NITE-mode intensity, NITE-mode relay K2 is energized but DAY-mode relay K1 is de-energized. This switching selection connects only capacitor C1 (2 μF) to the flashtube for the lowest level of flash intensity. Capacitor C1 charges through burst resistor R2 and burst choke L2 to optimize the light output of each nighttime flash which consists of a burst of short flicks.

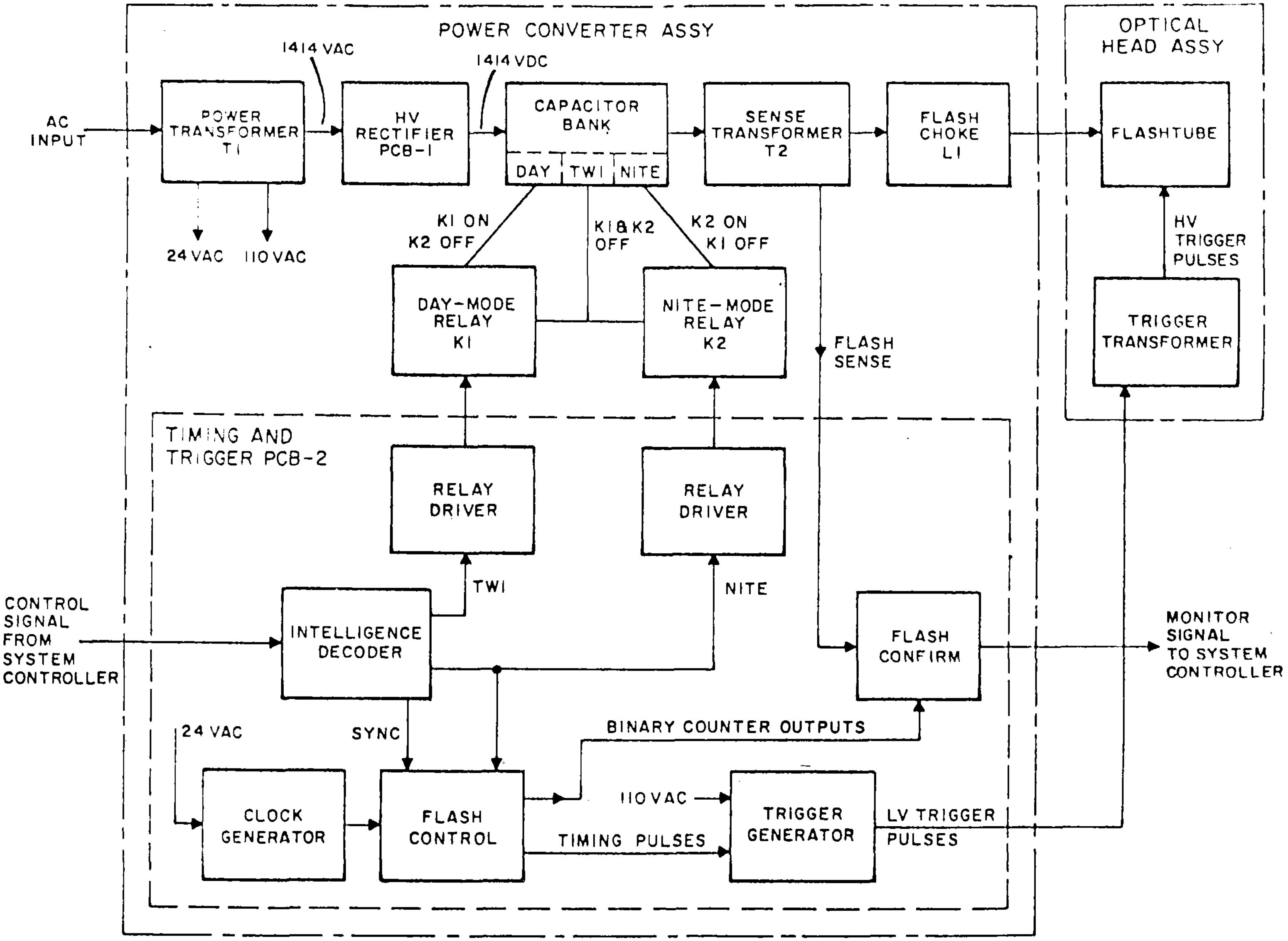

Figure 4-1. Overall Block Diagram of Coruscating Beacon

During TWI-mode and NITE-mode operation, DAY-mode relay K1 is de-energized and connects 1500 volts dc from capacitors C2 and C3 to heating resistor R1. This resistor maintains enough heat in the Coruscating Beacon to prevent condensation inside the enclosure throughout the twilight and the night.

4.3 OPTICAL HEAD ASSEMBLY DESCRIPTION

Details of the optical head assembly are shown on the wiring diagram of the Coruscating Beacon included in Section 5.5 of these instructions.

The optical head assembly contains trigger transformer T3, flashtube FT1, and the reflector optics. Trigger transformer T3 steps up low-voltage trigger pulses from the timing and trigger board (TB4-11 and TB4-10) to high-voltage trigger pulses (about 15 kilovolts peak). These high-voltage trigger pulses connect to the trigger wire of flashtube FT1, a long quartz tube with xenon gas, causing it to ionize. Each time a trigger ionizes the flashtube, it conducts and discharges the energy storage capacitor(s) switched by DAY-mode relay K1 and NITE-mode relay K2.

The reflector optics (refer to Figure 1-1) locates the flashtube at the locus of focal points of a polyfocal parabolic cylindrical reflector. With the cylindrical axis horizontal, the radiating light has a narrow (3 degrees) vertical beam spread and a wider (120 degrees) horizontal beam spread. A set of louvers, inserted lengthwise across the reflector, shields ground personnel from direct light radiation.

4.4 TIMING AND TRIGGER CIRCUIT (2723 Series)

Components of the timing and trigger circuit are mounted on a 2723 Series printed-circuit board. A block diagram of this circuit is shown in Figure 4-2. A schematic diagram for the circuit and a timing diagram that depicts the relationship of its logic signals are included in Section 5.5 of these instructions.

4.4.1 Clock Generator Functions

The 24-volt ac input at terminals 2 and 3 drives clock generator U5 (an astable multivibrator) which produces the basic timing signals (F and $\overline{F}$). These signals clock the synchronous logic circuits on the timing and trigger board and use the ac power frequency as the reference. Also, the 24-volt ac input is rectified to provide dc supply voltages (10 volts for logic devices, approximately 25 volts for discrete devices).

4.4.2 Sync and Intensity Mode Functions

The digital control signal at terminal 6 is coupled to a four-stage shift register (U6) of the intelligence decoder. As clocked by the $\overline{F}$ signal, the input stage of the shift register will shift to a logical one state only if the control signal input is at a logical one level.

If the registers are arbitrarily designated from 1 through 4 beginning with the rightmost register (U6, pin 2) and ending with the input register (U6, pin 13), their states at the end of the control-signal pulse train will be as follows:

Register	State
1	1
2	0
3	0 for DAY mode
	1 for TWI mode
4	0 for DAY or TWI mode
	1 for NITE mode (dominates over DAY or TWI mode)
Input	1

When the output of register 1 and the input are at a logical one state, and the output of register 2 is at a logical zero state, the output of NAND gate U3 (pin 6) switches to a logical zero state. The negative going change is integrated and applied as the sync reset pulse to the flash control circuit.

At sync reset, the decoded outputs of registers 3 and 4 provide the control of the intensity mode function. The output of register 3 is applied to pin 9 of the DAY-mode latch (U7). A logical zero state at the register 3 output (calling for DAY mode) causes the DAY-mode latch to become reset (Q = 0). When reset, the logical one $\overline{Q}$ output (pin 12) switches DAY-mode relay driver Q7-Q8 (a complimentary transistor pair) for a high level output at terminal 8 to energize the DAY-mode relay. Or, a logical one state at the register 3 output (calling for TWI mode) causes the DAY-mode latch to become set (Q = 1). When set, the logical zero $\overline{Q}$ output switches DAY-mode relay driver Q7-Q8 for a low level output at terminal 8 to de-energize the DAY-mode relay.

The output of register 4 is applied to pin 5 of the NITE-mode latch (U7). A logical one state at the register 4 output causes the NITE-mode latch to become set. When set, the logical one Q output (pin 1) switches NITE-mode relay driver Q5-Q6 (a complimentary transistor pair) for a high level output at terminal 9 to energize the NITE-mode relay. Or, a logical zero state at the register 4 output (calling for DAY or TWI mode) causes the NITE-mode latch to become reset. When reset, the logical zero Q output switches NITE-mode relay driver Q5-Q6 for a low level output at terminal 9 to de-energize the NITE-mode relay.

Note that the TWI mode is obtained when the register 3 output is at a logical one state and the register 4 output is at a logical zero state. During this mode, both terminals 8 and 9 are at a low level to de-energize the DAY-mode and NITE-mode relays at the same time.

A switch is located on the timing and trigger board for convenience of maintenance personnel for local selection of the NITE mode. With the System Controller commanding the DAY mode, closing switch S1K forces the NITE mode of operation. With S1K closed, the register 4 output stays at a logical one state to keep the NITE-mode latch set for the NITE mode.

4.4.3 Flash Control Functions

The flash control circuit is designed so the Coruscating Beacon will continue to flash if the System Controller is disabled and no control signal is received. Under this condition, the interval between flashes is slightly longer and the flashes from all Coruscating Beacons will usually remain in synchronization even if the condition persists.

The main functional portion of the flash control circuit is a seven-stage ripple counter (U1). This counter is clocked by clock signal F to produce frequency-divided time intervals in binary steps. The different time intervals available are selected for two purposes: for reset and keying time decoding in the flash control circuit, and for monitor-signal confirmation timing in the flash confirm circuit.

The reset function of the reset and keying time decoder involves NAND gate U4 (pin 3). Counter outputs U1-4 and U1-3 are applied as inputs to U4 as a self-reset when needed. The seven-stage counter (U1) is reset at periodic intervals by the Q output from the reset flip-flop (U5). The output of reset gate U4 (pin 4 of NAND gate U4) is used to preset the reset flip-flop.

During normal operation, the reset flip-flop is preset by each sync

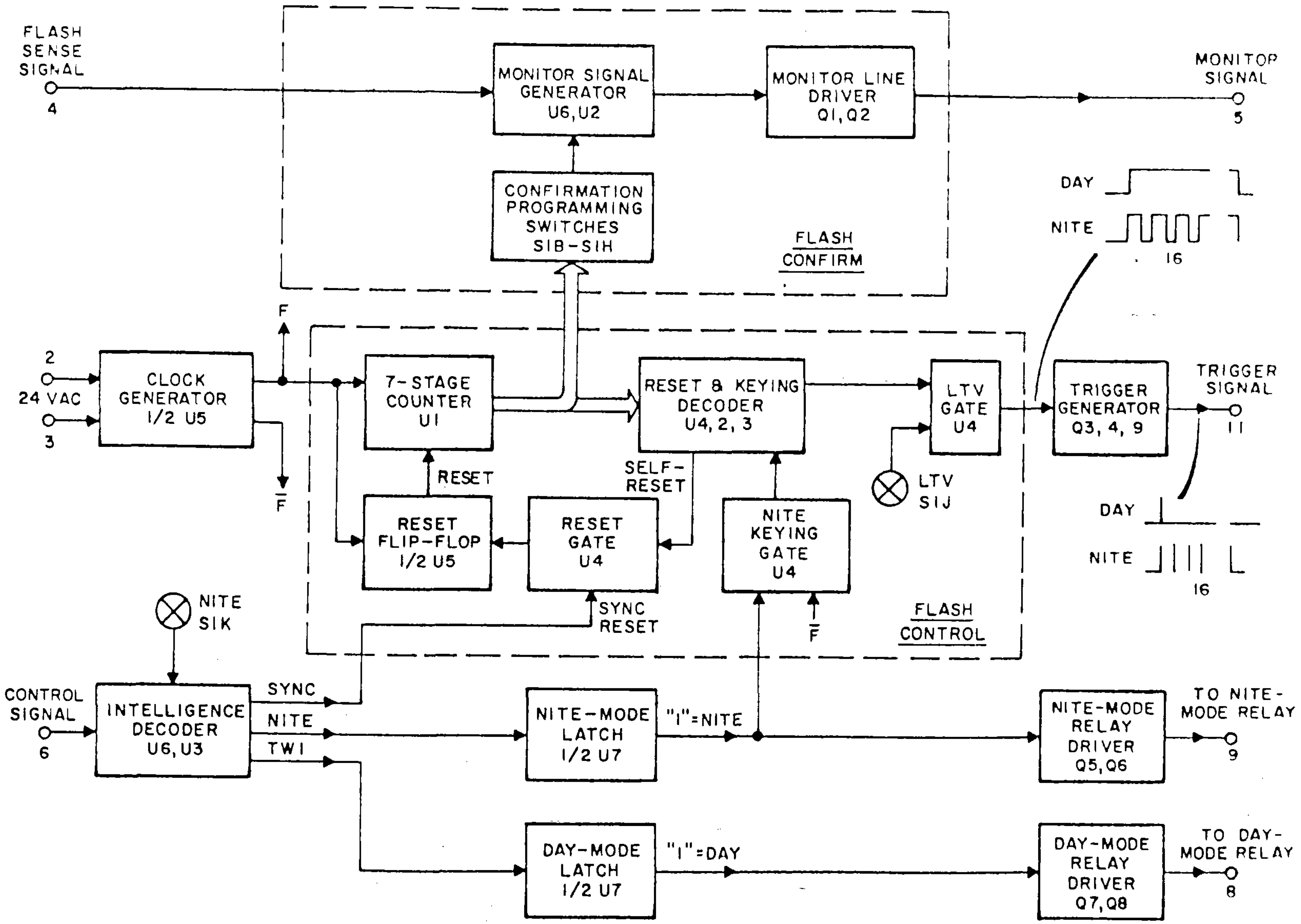

Figure 4-2. Block Diagram of Timing and Trigger Board (2723 Series)

reset output of the intelligence decoder to produce a normal timing cycle synchronized by the System Controller. However, if no control signal is received from the System Controller, the toggled output at pin 3 of U4 occurs as a self-reset pulse to preset the reset flip-flop. In this case, the timing cycle duration is determined by the self-reset timing and is synchronized by the local F clock pulses. Thus, each timing cycle duration is determined by a sync reset pulse or a self-reset pulse, whichever occurs first to preset U5 and to clear U1 (see Table 4-1).

The keying function of the reset and keying time decoder involves NAND gate U3 (pin 9) and NOR gate U2 (pin 4). Counter output U1-5 toggles NAND gate U3 to produce a keying signal output starting sixteen F clock pulses after time 0 and lasting for another sixteen F clock pulses. After this time, counter outputs U-4 and U-3 and NOR gate U2 inhibit any further keying in the timing cycle. This timing results in one DAY keying signal pulse (sixteen clock periods in duration) for producing one DAY flash in each timing cycle.

Keying for the NITE mode involves the NITE keying gate (U4, pin 11). During the NITE mode when the NITE-mode latch is set (Q = 1), its Q output (U7, pin 1) causes the output of the NITE keying gate to toggle as square waves at the $\overline{F}$ clock rate. As the third input at pin 8 of NAND gate U3, the square waves inhibit the keying signal output. As a result, the NITE keying signal output consists of sixteen pulses (occurring at F clock rate) for producing sixteen NITE flicks in each timing cycle.

The DAY (and TWI) or NITE keying signal is applied as one input to pin 8 of LTV gate U4. Normally, U4 toggles by the keying signal input to produce a positive-going keying signal output for the trigger generator. Switch S1J on the timing and trigger board permits maintenance personnel to perform a local LTV (lowest triggerable voltage) test. When switch S1J is closed for this test, U4 toggles from its pin 9 input to produce constant keying as square waves occurring at the $\overline{F}$ clock rate.

4.4.4 Trigger Generator Function

The trigger generator circuit includes differentiating pulse-shaping driver Q3-Q4 (a complimentary saturated amplifier pair) and silicon-controlled-rectifier Q9. Power for generating the triggers is obtained from the 110-volt ac input at terminal 1. Energy storage capacitor C19 is in series with inductor L1, rectifier diode D31, current limiting resistor R45, and fuse F1. Inductor L1 delays the current surge through Q9 as it is turned on by the keying-signal pulse input. When Q9 is gated on, capacitor C19 discharges rapidly through it to form a high-impulse trigger signal in the external circuit connected to terminal 11.

4.4.5 Flash Confirm Function

The flashing status of each Coruscating Beacon is confirmed by a monitor signal that occurs at a programmable time slot which represents that Coruscating Beacon's position in the system. For example, the monitor signal from Beacon 1 of Tier 6 occurs the earliest in the timing cycle; that from Beacon 4 of Tier 1 occurs the latest.

To program the monitor-signal time slot, seven outputs from seven-stage counter U1 are diode connected through seven confirmation programming switches (S1B thru S1H) to a common logic line. The settings of these seven switches select the Beacon-Tier time slot within the timing cycle (see Table 4-2).

The selected counter outputs and the common logic line effectively act as an AND gate. With the logic line supplied a source voltage at a logical one level, the line will be clamped to a logical zero level until the point is reached in the timing cycle when all selected counter outputs become a logical one state. At this point (the beginning of the selected time slot), the logic line is unclamped and rises to become a logical one. The logical one output is inverted (by U2) to produce a confirm strobe of two F clock periods in duration.

Shift register stage U6 and NOR gate U2 form the monitor signal generator. Early in each timing cycle, the occurrence of a Coruscating Beacon flash results in a flash-sense signal input at terminal 4 of the timing and trigger board. This flash signal input clears shift register U6, holding pin 8 of the NOR gate at a logical zero level. Later in the timing cycle, the confirm strobe toggles U2 to produce a monitor signal output (two F clock periods in duration) and clocks the U6 output to a logical one level at the end of the confirm strobe. As a result, U6 inhibits U2 from producing another monitor signal until it is cleared in the next timing cycle by another flash sense signal. The positive-going monitor signal output from NOR gate U2 passes through the monitor line driver (amplifier Q1 and emitter follower Q2) to terminal 5 for transmission to the System Controller.

Table 4-1. Reset and Keying Timing for FTB-205A System (2723 Series timing and trigger board — 60 Hz system)

Flash Control Function	U1 Pin Output Used	Occurrence after Timing Cycle 0[1]
Self-reset	3 & 4	1.600 seconds
DAY flash start	3, 4, & 5	0.267 second
DAY flash stop	3, 4, & 5	0.533 second[2]
NITE flash start	3, 4, & 5	0.267 second[3]
NITE flash stop	3, 4, & 5	0.533 second

---

[1] Normal timing cycle is 1.500 seconds in duration as synchronized by System Controller.

[2] NAND gate U3 (pin 9) is toggled on throughout start-stop interval but results in only one DAY flash at the beginning of the interval.

[3] NAND gate U3 (pin 9) is toggled on and off sixteen times at $\overline{F}$ clock rate in start-stop interval to produce sixteen NITE flicks during this interval.

Table 4-2. Beacon-Tier Programming for FTB-205A System (confirm switch S1 settings on 2723 series timing and trigger board, see Figure 4-3; switch arm numbers are in parentheses after binary outputs)

Beacon-Tier Location	S1B 1 (2)	S1C 1 (3)	S1D 2 (4)	S1E 4 (5)	S1F 8 (6)	S1G 16 (7)	S1H 32 (8)
Beacon 1, Tier 1	X	0	0	X	0	0	X
Beacon 2, Tier 1	X	0	X	X	0	0	X
Beacon 3, Tier 1	0	X	0	X	0	0	X
Beacon 4, Tier 1	0	X	X	X	0	0	X
Beacon 1, Tier 2	X	0	0	0	0	0	X
Beacon 2, Tier 2	X	0	X	0	0	0	X
Beacon 3, Tier 2	0	X	0	0	0	0	X
Beacon 4, Tier 2	0	X	X	0	0	0	X
Beacon 1, Tier 3	X	0	0	X	X	X	0
Beacon 2, Tier 3	X	0	X	X	X	X	0
Beacon 3, Tier 3	0	X	0	X	X	X	0
Beacon 4, Tier 3	0	X	X	X	X	X	0
Beacon 1, Tier 4	X	0	0	0	X	X	0
Beacon 2, Tier 4	X	0	X	0	X	X	0
Beacon 3, Tier 4	0	X	0	0	X	X	0
Beacon 4, Tier 4	0	X	X	0	X	X	0
Beacon 1, Tier 5	X	0	0	X	0	X	0
Beacon 2, Tier 5	X	0	X	X	0	X	0
Beacon 3, Tier 5	0	X	0	X	0	X	0
Beacon 4, Tier 5	0	X	X	X	0	X	0
Beacon 1, Tier 6	X	0	0	0	0	X	0
Beacon 2, Tier 6	X	0	X	0	0	X	0
Beacon 3, Tier 6	0	X	0	0	0	X	0
Beacon 4, Tier 6	0	X	X	0	0	X	0

X = switch closed and 0 = switch opened; this table for 60-Hz systems.

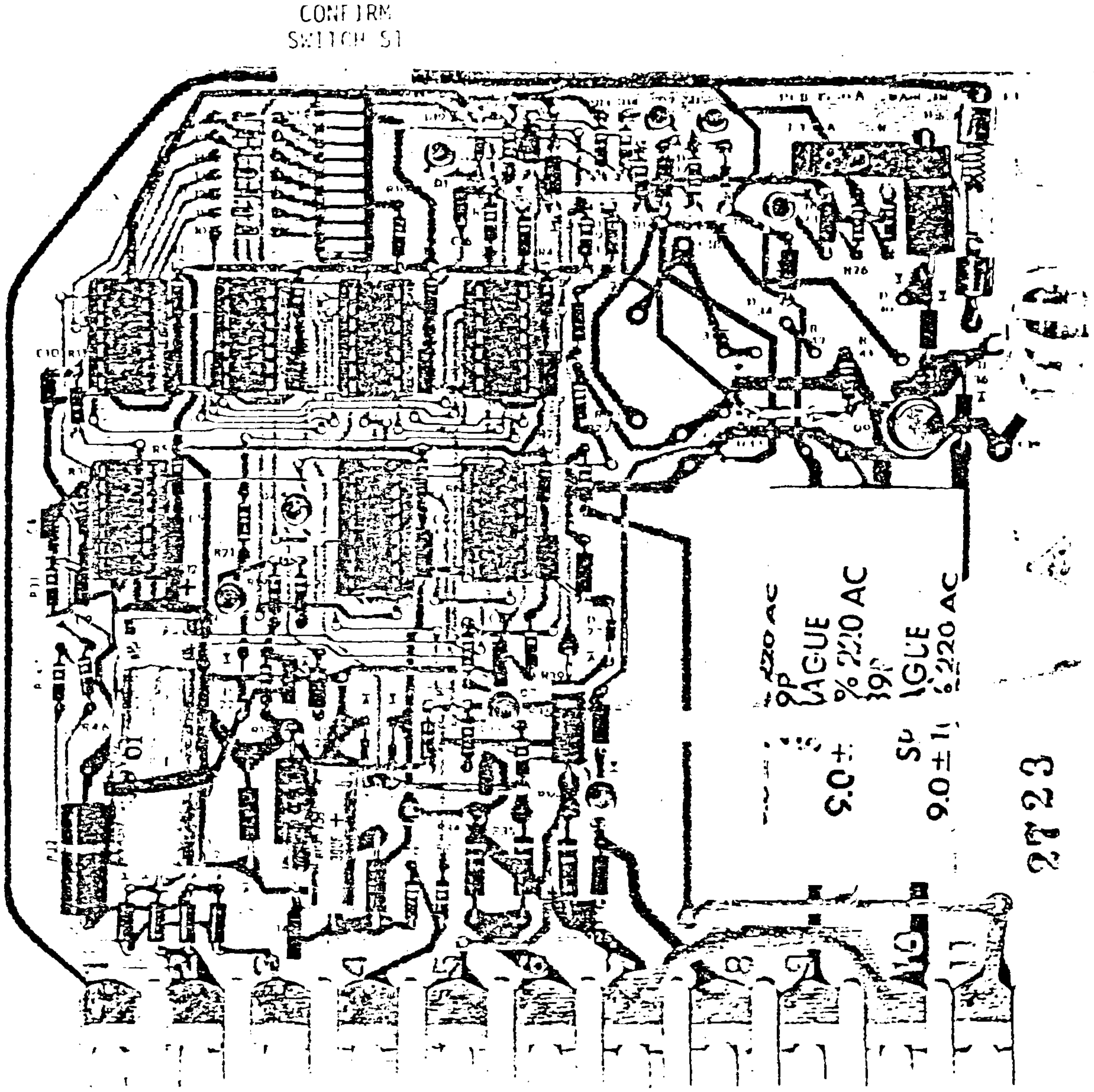

Figure 4-3. Component-Side View of Timing and Trigger Board
(2723 Series)

SECTION 5

MAINTENANCE

5.1 PREVENTIVE MAINTENANCE

The glass windows in the Coruscating Beacons must be kept free of smoke or grime deposits if the intensity of the flashes is to be maintained. How often the windows will require cleaning depends on the environment at the site. Probably the most convenient method of cleaning is to use a squeeze bottle of a commercially available window cleaner. Spray the window and then wipe it clean with a soft cloth or paper towel.

When cleaning is necessary, take the opportunity to inspect the Coruscating Beacon installation. Make sure that all attaching bolts are tight and that the vertical beam-spread peak of the Coruscating Beacon is aimed at the desired elevation angle.

5.2 TROUBLESHOOTING

5.2.1 Locating Sources of Trouble

Most of the malfunctions of a Coruscating Beacon will be indicated by one of the symptoms listed in Table 5-1. These symptoms are determined by observation of the flashes from the Coruscating Beacons during DAY-, TWI-, and/or NITE-mode operations.

The components whose failure might produce each of the Table 5-1 symptoms are given in Table 5-2. For example: symptom "R" (all Coruscating Beacons not flashing) may result from lack of system power or from a malfunction of the System Controller; lack of system power is by far the most probable cause. In fact, the System Controller can be completely disconnected and the Coruscating Beacons will continue to flash, but without system control of flash rate and intensity mode.

5.2.2 Field Tests

WARNING: Always check that no residual dc high voltage exists with the ac power off when accessing the interior of a Coruscating Beacon. To check for high voltage, connect a 20,000 ohms/volt (or higher) meter across the 100:1 voltage-divider test point at terminal TB4-7. Do not contact any interior wiring or conductors unless the meter reading is less than 0.1 volt at TB4-7 (confirm absence of no residual voltage by direct measurement of less than 10 volts at capacitors C1, C3, and C5).

Certain field tests are conducted when the ac power is on (sometimes the dc high voltage is present). A normal dc high voltage (about 1500 volts) will produce a meter reading at TB4-7 of about 1500 volts. When these tests are necessary, use extreme caution to avoid contact with live circuits.

Table 5-1. Major Symptoms of Trouble

Symptom	Coruscating Beacon Under Observation			Notes
	DAY-Mode Operation	TWI-Mode Operation	NITE-Mode Operation	
A	Weak	Weak	Weak	
B	OK	OK	OK	No confirmation
C	OK	OK	Bright burst	
D	OK	OK	3 - 4 flick burst	
E	OK	OK	Weak burst	
F	OK	OK	Out	Or holdover
G	OK	DAY intensity	OK	
H	OK	Out	OK	
I	Weak	OK	OK	
J	TWI intensity	OK	OK	
K	Skips	OK	Ragged	
L	Skips	Skips	Ragged	
M	1 NITE flick	1 NITE flick	OK	
N	Out	Out	Out	
O	All other Coruscating Beacons OK			
P	No external evidence of problem			
Q	All Coruscating Beacons flashing (in sync or not) but not confirming			
R	All Coruscating Beacons not flashing			

Table 5-2. Possible Sources of Trouble

Component	Symptoms*																	
	A	B	C	D	E	F	G	H	I	J	K	L	M	N	O	P	Q	R
C1 (2 μF)					1	4												
C2/C3 (100 μF)									1					4				
C4 (3 μF)											2	7		13				
C5 (30 μF)								2						11				
FT1 flashtube											1	1		3				
FT1 trigger wire												3		5				
F1/F2 fuse														8				
K1 DAY-mode relay							3			2								
K2 NITE-mode relay				2									2					
L1 flash choke						2								12				
L2 burst choke														14				
MOV-1 varistor														7		1		
PCB-1 HV rectifier board						3	2	1						9				
PCB-2 timing & trigger bd		1		1		5	1			1		2	1	2	1			
R1 heater resistor	2											5				2		
R2 burst resistor			1			1												
SW1/SW2 interlock switch														1				
T1 power transformer	3											6		10				
T2 sense transformer		2																
T3 trigger transformer												4		6				
Beacon window	1																	
System Controller																	1	
Control wiring																	2	
System power wiring																		1

*Numbers represent order of probability

NITE-Mode Test. With System Controller commanding the DAY mode, the NITE-mode operation can be checked at a particular Coruscating Beacon as follows:

a. Close NITE switch on timing and trigger board of Beacon.

b. Depress interlock switches SW1 and SW2 to check NITE-mode functions of that Beacon.

c. After the NITE-mode test, open NITE switch, close Beacon door, and note that Beacon functions properly in DAY mode.

Component Tests. The following procedures describe the steps to be taken to check the conditions of components listed in Table 5-2. For some components, the most practical method of field checkout is by substituting another component known to be in good condition. Make all resistance measurements with the power off. For voltage measurements that require preliminary adjustments (for example, connecting jumpers or disconnecting leads), perform the adjustments with the power off.

Resistance measurements across the terminals of a capacitor provide an indication of its condition. At the instant the meter leads are applied, the meter should read 0 ohms. The reading should then increase to infinity. The rate of increase will depend on the value of capacitance. The capacitor tests described in the following paragraphs give the time it should take for the resistance reading to reach 1 megohm, based on using the "Ω × 100K" scale of the Triplett Model 630-NA volt-ohm-milliammeter (similar 20,000 ohms/volt V-O-Ms should give the same results.

Note: Measurement readings made with certain volt-ohm-milliammeters may be erroneous when on a support tower near a radiating antenna mast. Make measurements when the antenna is not radiating, or use a meter known to be unaffected by an RF field.

1. C1 Capacitor

Before measuring this 2 μF capacitor, remove all leads from its "+" terminal. The meter reading should go from 0 to 1 megohm in approximately 1.0 second as it approaches infinity.

2. C2 or C3 Capacitor

Before measuring either of these 100 μF capacitors, remove all leads from its "+" terminal. The meter reading should go from 0 to 1 megohm in approximately 51.2 seconds as it approaches infinity.

3. C4 Capacitor

Before measuring this 3 μF capacitor, remove the transformer lead from one of its terminals. The meter reading should go from 0 to 1 megohm in approximately 1.54 seconds as it approaches infinity.

4. C5 Capacitor

Before measuring this 30 µF capacitor, remove all leads from its "+" terminal. The meter reading should go from 0 to 1 megohm in approximately 15.3 seconds as it approaches infinity.

5. FT1 Flashtube

Check condition of flashtube by using LTV (lowest triggerable voltage) function as follows:

a. Close LTV switch on timing and trigger board. [If 2723 Series board is used, close NITE switch S1K and remove wire at chassis terminal 3 to disconnect ground on coil of NITE-mode relay K2.]

b. Close interlock switches SW1 and SW2 to check LTV operation. Beacon will operate in TWI mode with constant keying at F clock rate. Flashtube will flash each time high voltage builds up to a level at which it can trigger.

c. Measure LTV level (peak of sawtooth wave) at TB4-7 (0.01 of voltage across capacitor C5). LTV level should be from 8 to 11 volts (800 to 1100 volts across C5). If not, replace flashtube (refer to Paragraph 5.3.2) and recheck LTV. If still not acceptable, check items 16 (trigger transformer) and 17 (trigger generator circuit) that follow.

d. After the LTV check, open the LTV switch. [If 2723 Series board is used, reconnect K2 ground wire to chassis terminal 3, and perform NITE-Mode Test as outlined above.]

6. K1 DAY-Mode Relay

Before making the following measurements, disable the high-voltage circuit by removing HV rectifier board PCB-1. Also make sure that no control signal is applied by disconnecting lead from terminal TB1-2. Apply power to the Coruscating Beacon and make the following measurements:

		Resistance (ohms)	
From	To	DAY Mode	NITE Mode*
C3+	C5+	0	Infinity
C3+	GRD-2	Infinity	30 K

*For NITE mode, close NITE rocker switch on timing and trigger board PCB-2. Be sure to open switch when finished with this test.

7. K2 NITE-Mode Relay

Before making the following measurements, disable the high-voltage circuit by removing HV rectifier board PCB-1. Apply power to the

Coruscating Beacon and make the following resistance measurements:

From	To	Resistance (ohms) DAY Mode	 NITE Mode*
TB2-6	C5+	0	Infinity
TB2-6	C1+	Infinity	0

*For NITE mode, close NITE rocker switch on timing and trigger board PCB-2. Be sure to open switch when finished with this test.

8. L1 Flash Choke

Measure the resistance from TB2-5 to TB2-6. The resistance should be less than or equal to 0.1 ohm. Check visually for signs of arcing.

9. L2 Burst Choke

Disconnect the L2 leads at TB2-2 and TB2-3. The resistance between L2 leads should be approximately 180 ohms. The resistance from either lead to chassis ground should be an open circuit (infinity).

10. PCB-1 HV Rectifier Board

Substitute a rectifier board known to be in good operating condition. The procedure for replacing this board is given in Paragraph 5.3.1. If the arc suppression resistor (in negative return to ground) shows signs of overheating, look for the arc location and repair the source of the problem before using a new board.

11. PCB-2 Timing and Trigger Board

Substitute a timing and trigger board known to be in good operation condition. The procedure for replacing this board is given in Paragraph 5.3.1.

12. R2 Burst Resistor

Check the resistance of this resistor as follows:

From	To	Resistance (ohms)
TB3-5	TB2-3	1500

13. SW1 or SW2 Interlock Switch

Disconnect power from the Coruscating Beacon. Measure the resistance between terminals F1 and TB1-4 for SW1 and between F2 and TB1-5 for SW2. The resistance should be an open circuit with the enclosure door opened. Manually depress either interlock switch; its resistance should drop to 0 ohms.

14. T1 Power Transformer

Remove HV rectifier board PCB-1 and timing and trigger board PCB-2 before performing the resistance and voltage measurements outlined below.

Make resistance measurements as follows (power off):

From	To	Approximate cold resistance (ohms)
TB1-4	TB1-5	0.75 (120V transformer) 10.5 to 14 (480 V transformer)
C4+	C4-	11 to 13
TB3-3	TB3-10	85 to 100
TB4-1	GRD-2	6 to 11
TB4-2	TB4-3	0.6 to 1.2

Make voltage measurements as follows (power on):

From	To	Voltage (ac)
TB1-4	TB1-5	Input power
TB3-3	TB3-10	1414
TB4-1	GRD-2	110
TB4-2	TB4-3	24

15. T2 Sense Transformer

Check the resistance of this transformer as follows:

From	To	Resistance (ohms)
TB2-6	C5+	0
TB4-4	GRD-4	1.35

16. T3 Trigger Transformer

Measure the resistance of this tranformer from the trigger wire clip to the cathode ("-") end of the flashtube (or to TB2-8). The resistance should be approximately 170 ohms.

17. Trigger Generator Part of PCB-2

Substitute a timing and trigger board known to be in good operating condition. The procedure for replacing this board is given in Paragraph 5.3.1.

5.3 MAJOR COMPONENT REPLACEMENTS

5.3.1 Printed-Circuit Board Replacements

If a printed circuit board contains a fault, send the board back to the factory for repair. FTCA will repair it or replace it and charge only for the repair cost.

CAUTION: When handling printed circuit boards which contain integrated circuit devices, avoid conditions in which you could conduct a static charge to the terminals of the board. Keep boards not in use in an anti-static (partially conductive) plastic bag that covers the connecting lugs.

As shown in Figure 5-1, the Coruscating Beacon contains two printed-circuit boards: the HV rectifier board (PCB-1) and the timing and trigger board (PCB-2). These two boards are mounted in the same way, and the procedure for replacing them is the same.

1. Disconnect ac power to the Beacon.
2. Loosen cap screws in the clamps that secure the enclosure door, and pull clamps outward off edge of the door.
3. Open door fully and hold open with brace on left side so safety interlock switches remain opened.
4. With a 20,000 ohms/volt (or higher) meter, check for residual voltage on the high voltage capacitors by using the 100:1 divider test point (LTV) at TB4-7. Wait until voltage drops below 0.1 volt at TB4-7; then check residual voltage on capacitors C1, C3, and C5 using highest scale of voltmeter.
5. When capacitor residual voltages are below 10 volts (direct measurements), attach jumper wire from terminal TB3-7 to chassis ground.
6. Remove fuses F1 and F2 with a fuse puller, and replace the protective cover over the fuse block.
7. Loosen two hold-down screws in corners of PC board to be replaced.
8. Loosen board's connector screws at terminal block approximately one full turn, but do not remove.
9. Slide board away from terminal block, lifting back edge of board clear of hold-down screws. Continue to slide board until clear of terminal block and then remove.
10. Place new PC board so that all spade connectors are under heads of appropriate screws on terminal block. Lower back edge of board so hold-down screws pass through the board. Slide board as far as possible toward terminal block.
11. Tighten both hold-down screws and the connector screws at terminal block.

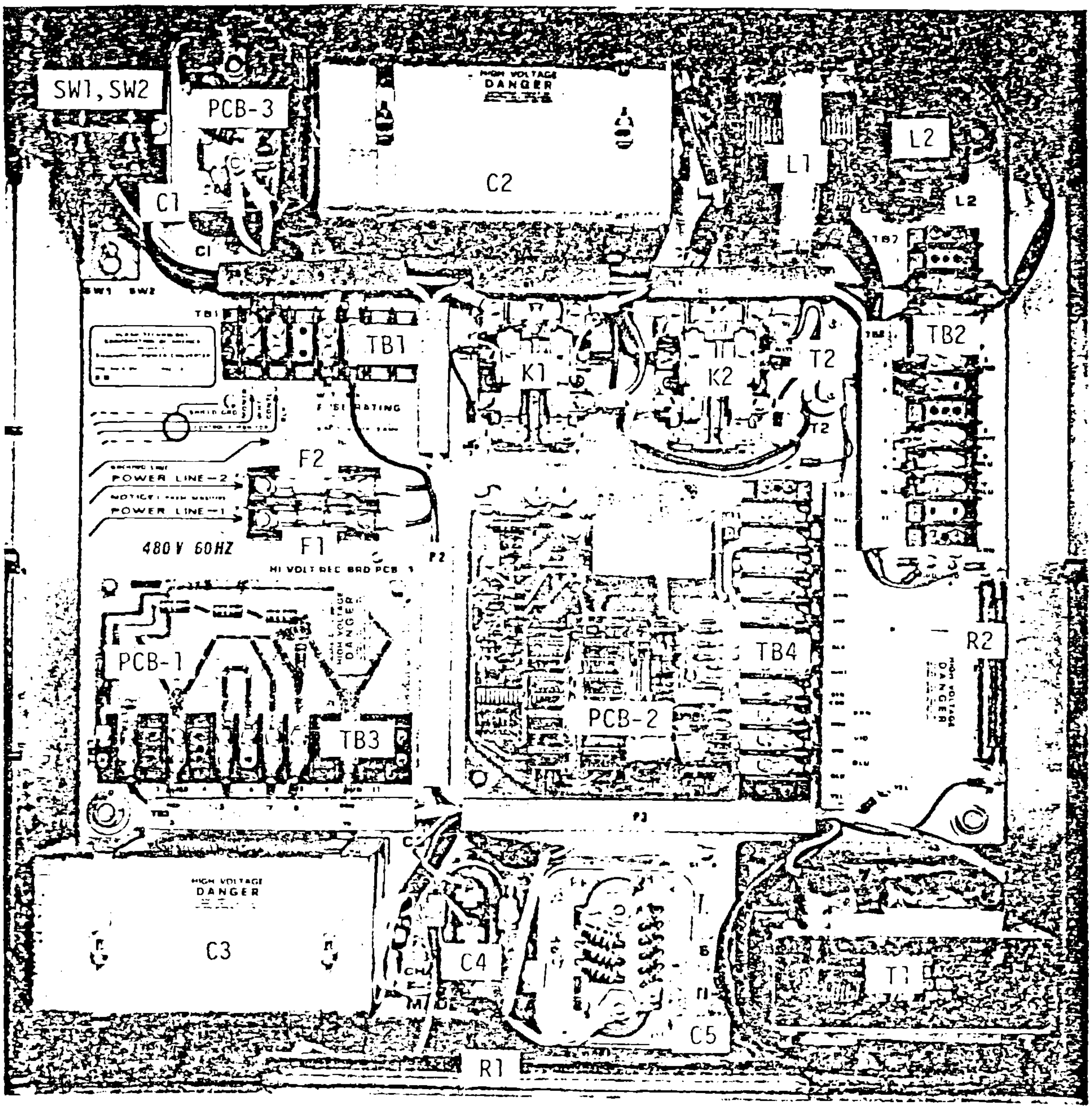

Figure 5-1. Component Locations on Power Converter Chassis

12. Remove jumper wire from terminal TB3-7 to ground, replace fuses F1 and F2 with a fuse puller, and replace their protective cover.

13. Close the enclosure door, slide clamps over edge of door, and tighten clamp screws.

14. Restore ac power to the Beacon.

5.3.2 Flashtube Replacement

Figure 5-2, a side view of the optical head assembly, shows the flashtube in its operating position. To replace the flashtube, proceed as follows:

1. Perform Steps 1 through 6 of Paragraph 5.3.1.
2. Remove trigger wire from spring clip on ceramic post mounted near cathode terminal of flashtube (right side).

   CAUTION: Do not touch flashtube quartz with bare hands. Use clean gloves, tissues, or cloth for handling. Apply pressure for removing or inserting a flashtube directly at its metallic terminals. Never apply pressure on the quartz envelope.

3. Use a small, flat-blade screwdriver to pry both flashtube terminals from the mounting clips. Carefully slide flashtube out through opening in either side of reflector.
4. Hold new flashtube by cathode terminal (end with trigger wire lead), and slide flashtube carefully through right side of reflector until anode terminal is positioned over its clip. Be sure trigger wire comes through hole on right side of reflector. Press anode terminal into its clip by using left forefinger.

   CAUTION: Be careful so clip does not bend under flashtube terminal.

5. Press cathode terminal of flashtube into its clip by using right forefinger.
6. Check that new flashtube has silicone rubber insulator over its trigger wire. If not, remove from old flashtube and install on new one.
7. Connect trigger wire from flashtube into spring clip on ceramic post. Wrap excess length of wire tightly around clip. Check that trigger wire does not come near flashtube cathode terminal.
8. Perform Steps 12 through 14 of Paragraph 5.3.1.

5.4 REFLECTOR CLEANING

To clean the reflector and optical louver surfaces of the optical head assembly, proceed as follows:

1. Perform Steps 1 through 6 of Paragraph 5.3.1

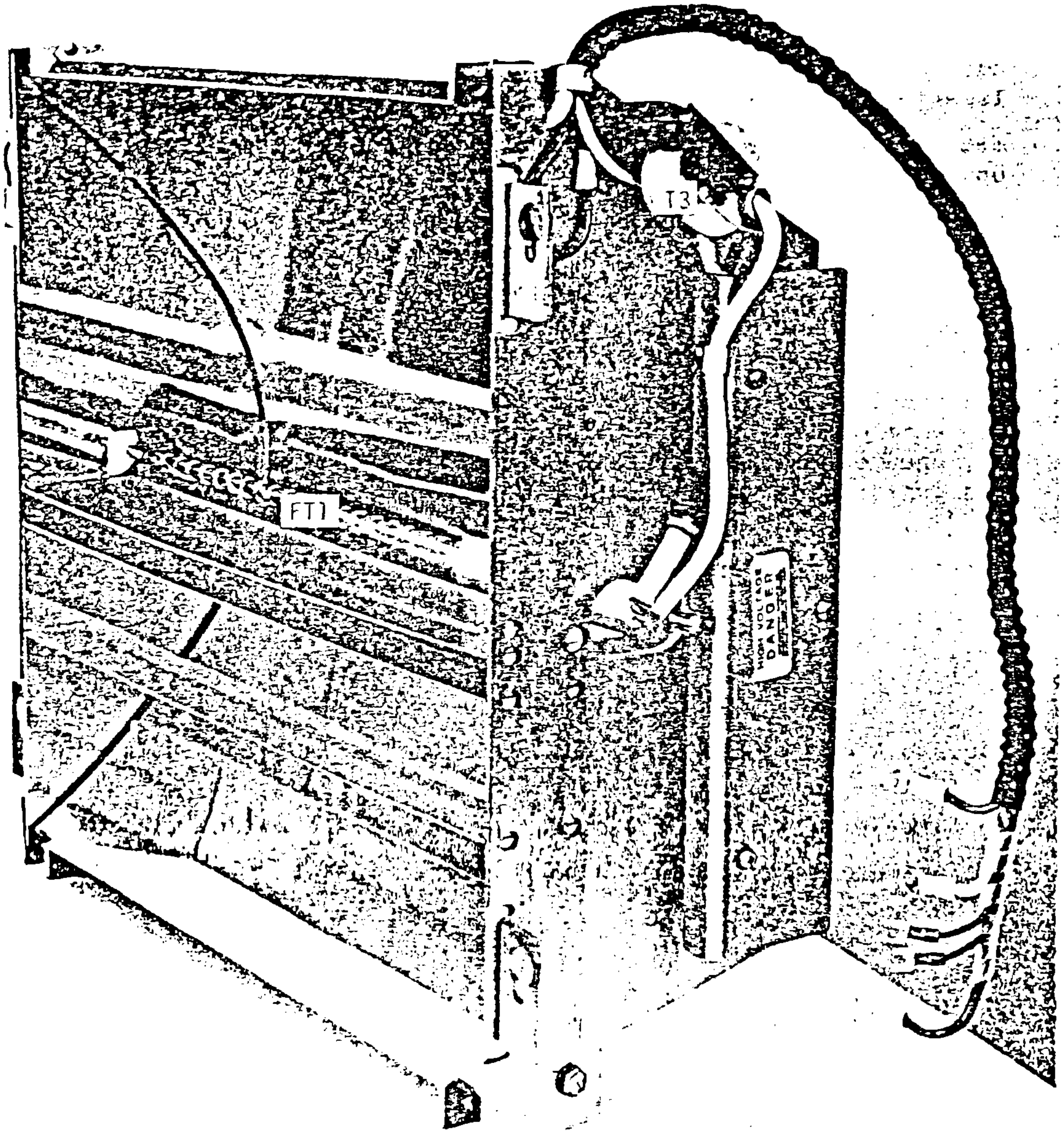

Figure 5-2. Component Locations on Optical Head Assembly

2. Perform Steps 2 and 3 of Paragraph 5.3.2 (remove flashtube).
3. Disconnect cable of optical head assembly from TB2 (terminals 5, 8, 9, 10, and 12).
4. Remove optical head assembly from enclosure door by loosening four nuts (two on each side), sliding assembly forward toward you, and lowering clear of mounting studs.
5. Set optical head assembly on a flat surface with reflector aimed upward.
6. Remove optical louvers one at a time by bowing them until one end is clear of its mounting holes in reflector, then rotate and remove other end from its mounting holes.
7. Clean reflector surfaces (curved and flat areas) and optical louvers by using water and soft cloth or tissue.
8. Replace louvers by inserting one end in its mounting hole and bowing sufficiently to allow other end to clear side while being positioned over other mounting hole. (Note that the smaller louvers are positioned farthest from the flashtube.)
9. Check that louvers are straight after insertion. If not, straighten by reverse bowing.
10. Remount optical head assembly on enclosure door. Lift into position so four studs with nuts and washers pass through holes in optical head assembly, then slide away from you until nuts and washers are holding it. Tighten the four nuts.
11. Reconnect cable of optical head assembly to TB2 (terminals 5, 8, 9, 10, and 12).
12. Perform Steps 4 through 7 of Paragraph 5.3.2 (replace flashtube).
13. Perform Steps 12 through 14 of Paragraph 5.3.1.

5.5 DRAWINGS

The following drawings are included to facilitate signal tracing in the Coruscating Beacon:

Figure 5-3	Coruscating Beacon, Wiring Diagram
Figure 5-4	High-Voltage Rectifier Board, Schematic Diagram
Figure 5-5	Timing and Trigger Board, Schematic Diagram
Figure 5-6	Coruscating Beacon Digital Signals, Timing Diagram

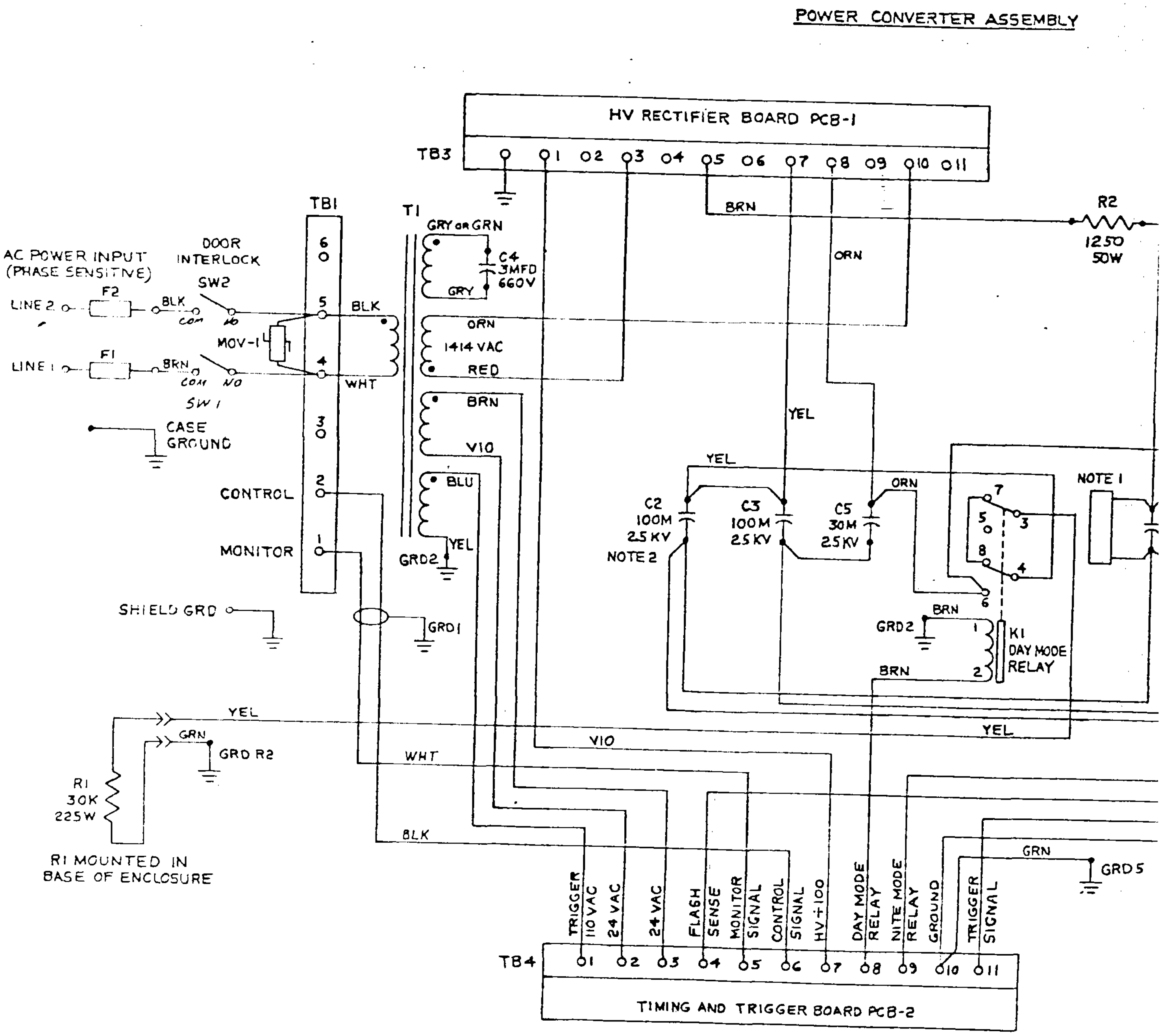

Figure 5-3. Coruscating Beacon
Wiring Diagram (D-2576)

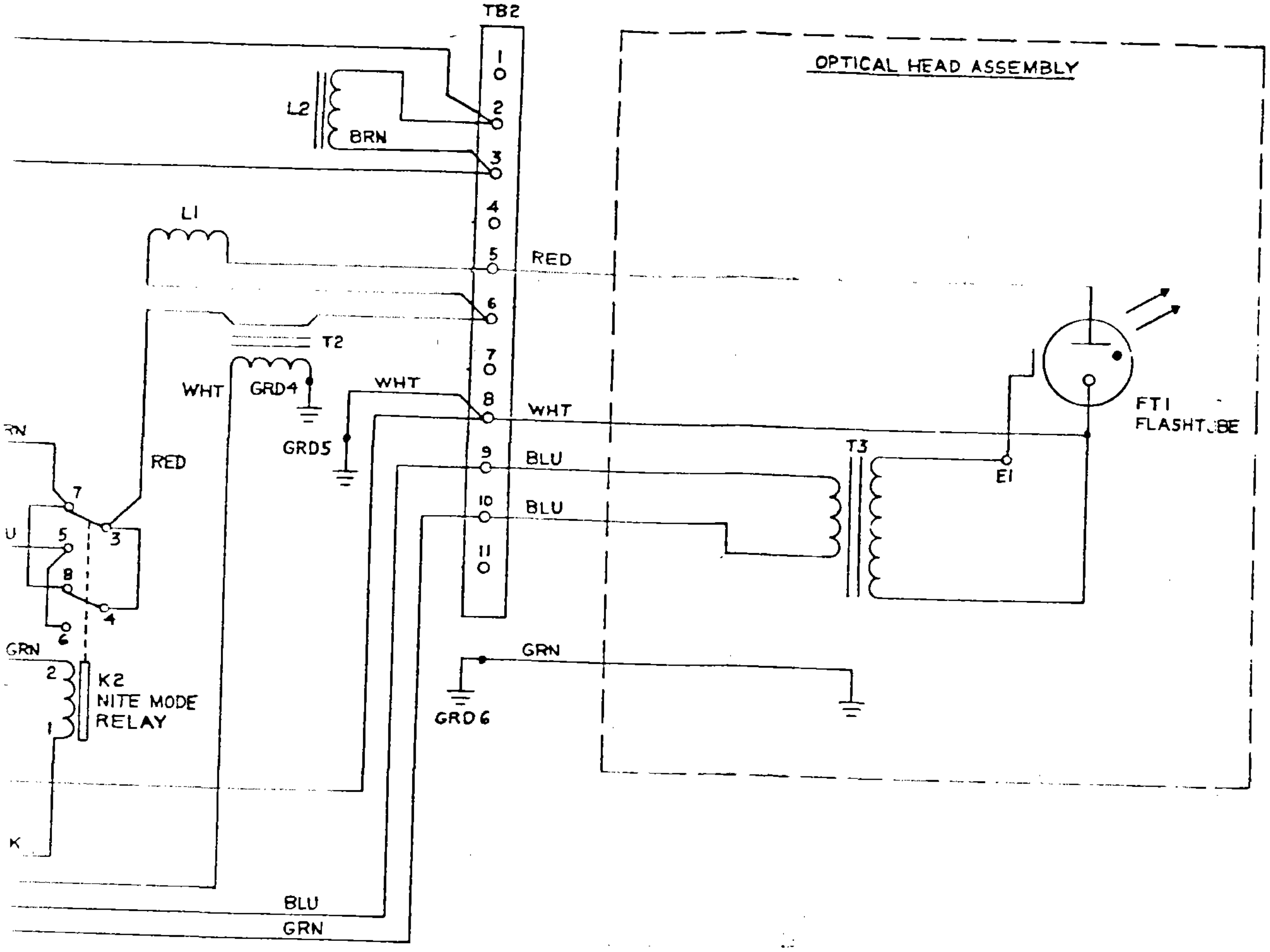
TB2
1
2
3
4
5
6
7
8
9
10
11
L2
BRN
L1
RED
T2
WHT
GRD4
WHT
GRD5
WHT
BLU
BLU
RN
RED
7
3
U
5
8
4
6
GRN
2
1
K2
NITE MODE
RELAY
K
BLU
GRN
OPTICAL HEAD ASSEMBLY
T3
E1
FT1
FLASHTUBE
GRN
GRD6

RELATED DRAWING	
DWG. NO	TITLE
C-2525	ARTWORK
C-2528	DRILL FAB
C-2480	ASSEMBLY
C-2415	OUTLINE

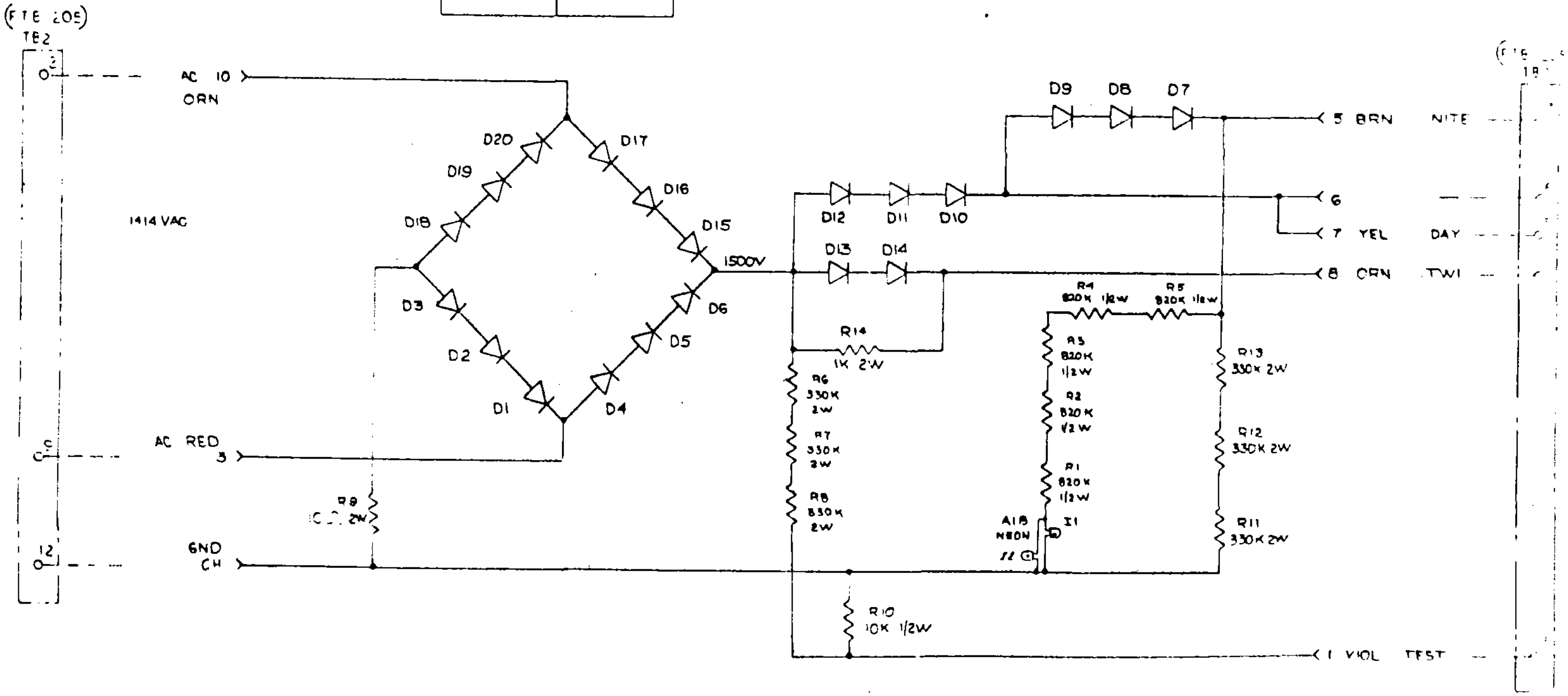

Figure 5-4. High-Voltage Rectifier Board, Schematic Diagram (C-2529)

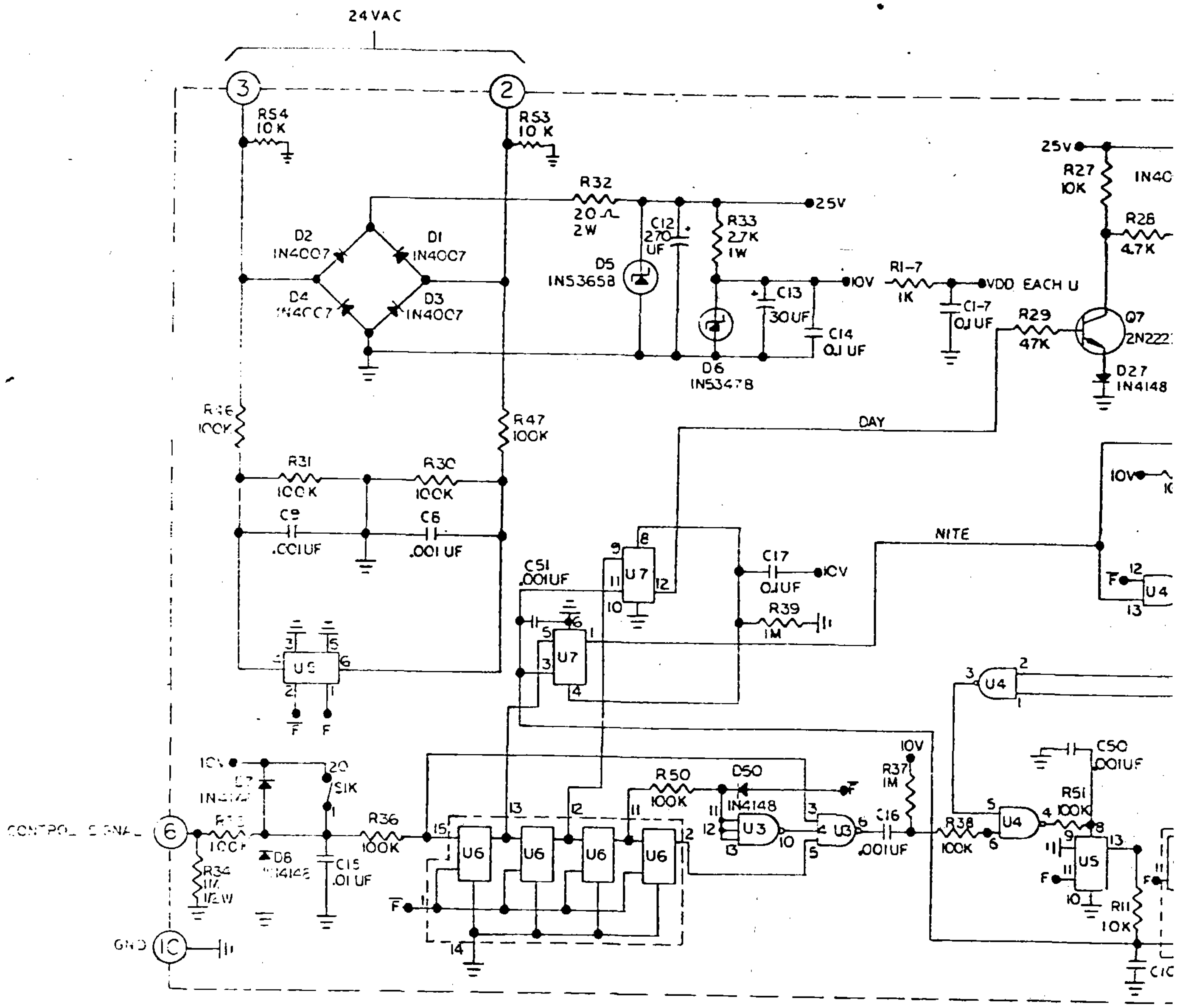

VOLTAGE CHART					
U	TYPE	GND PIN	VDD PIN	R	C
1	14024	7	14	1	1
2	14001	7	14	2	2
3	14023	7	14	3	3
4	14011	7	14	4	4
5	14013	7	14	5	5
6	14015	8	16	6	6
7	14013	7	14	7	7

Figure 5-5. Timing and Trigger Board Schematic Diagram (D-3249)

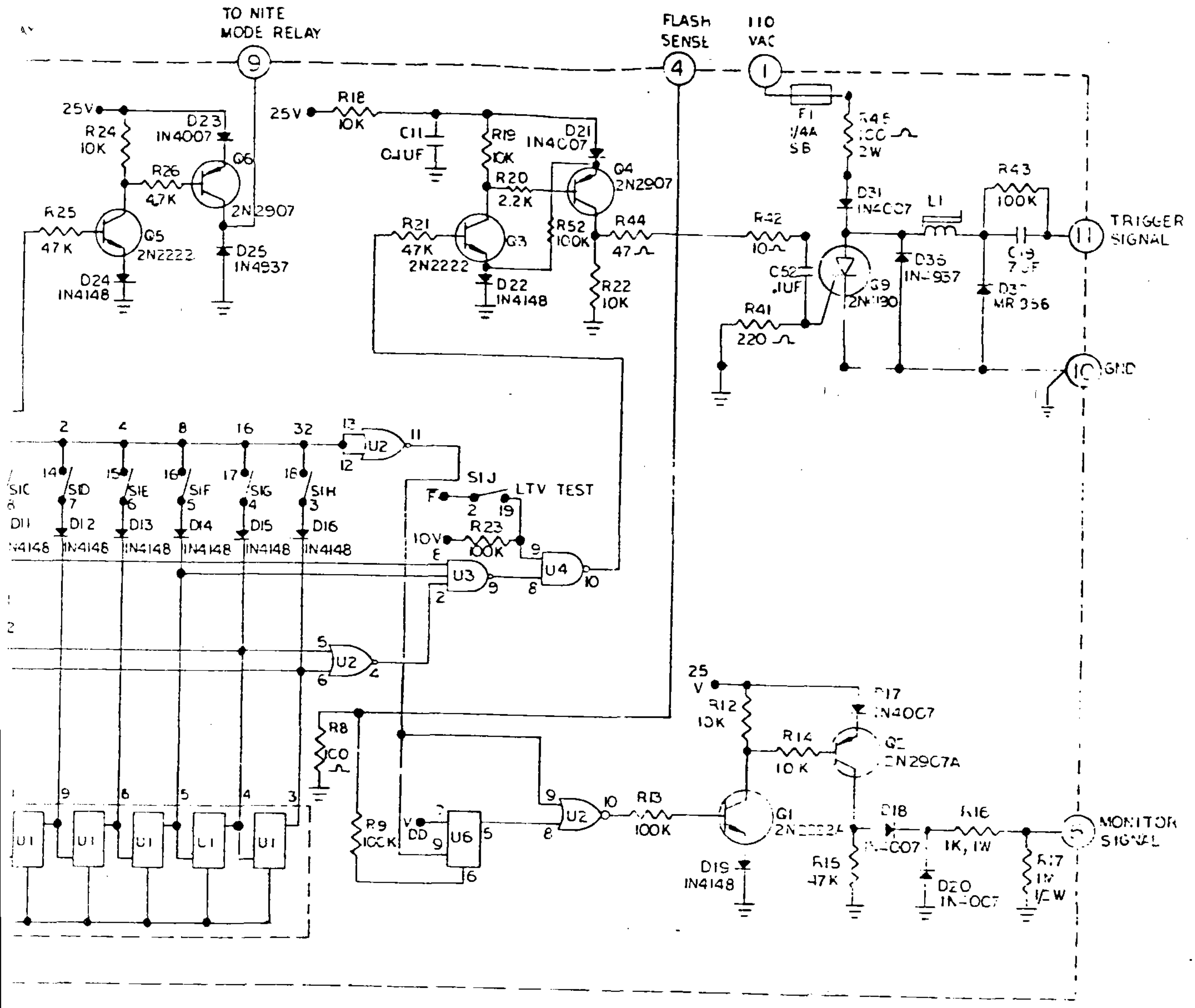

TO NITE
MODE RELAY
9
FLASH
SENSE
4
110
VAC
1
25V
R24
10K
D23
1N4007
Q6
2N2907
R26
4.7K
R25
47K
Q5
2N2222
D24
1N4148
D25
1N4937
25V
R18
10K
C11
0.1UF
R19
10K
D21
1N4007
Q4
2N2907
R20
2.2K
R21
47K
2N2222
Q3
R52
100K
R44
47
D22
1N4148
R22
10K
F1
1/4A
SB
R45
100
2W
D31
1N4007
L1
R43
100K
R42
10
C52
.1UF
Q9
2N4190
D36
1N4937
C19
7UF
D37
MR 356
R41
220
TRIGGER
SIGNAL
11
10
GND
2
4
8
16
32
13
U2
11
12
14
15
16
17
18
SIC
8
SID
7
SIE
6
SIF
5
SIG
4
SIH
3
D11
D12
D13
D14
D15
D16
1N4148
S1J
LTV TEST
F
2
19
10V
8
R23
100K
9
U3
U4
10
9
8
2
5
U2
4
6
25
V
D17
1N4007
R12
10K
R14
10K
Q2
2N2907A
R8
100
9
8
5
4
3
U1
R9
100K
V
DD
U6
9
5
6
9
U2
10
8
R13
100K
Q1
2N2222A
D18
1N4007
R16
1K, 1W
MONITOR
SIGNAL
5
D19
1N4148
R15
47K
D20
1N4007
R17
1M
1/2W

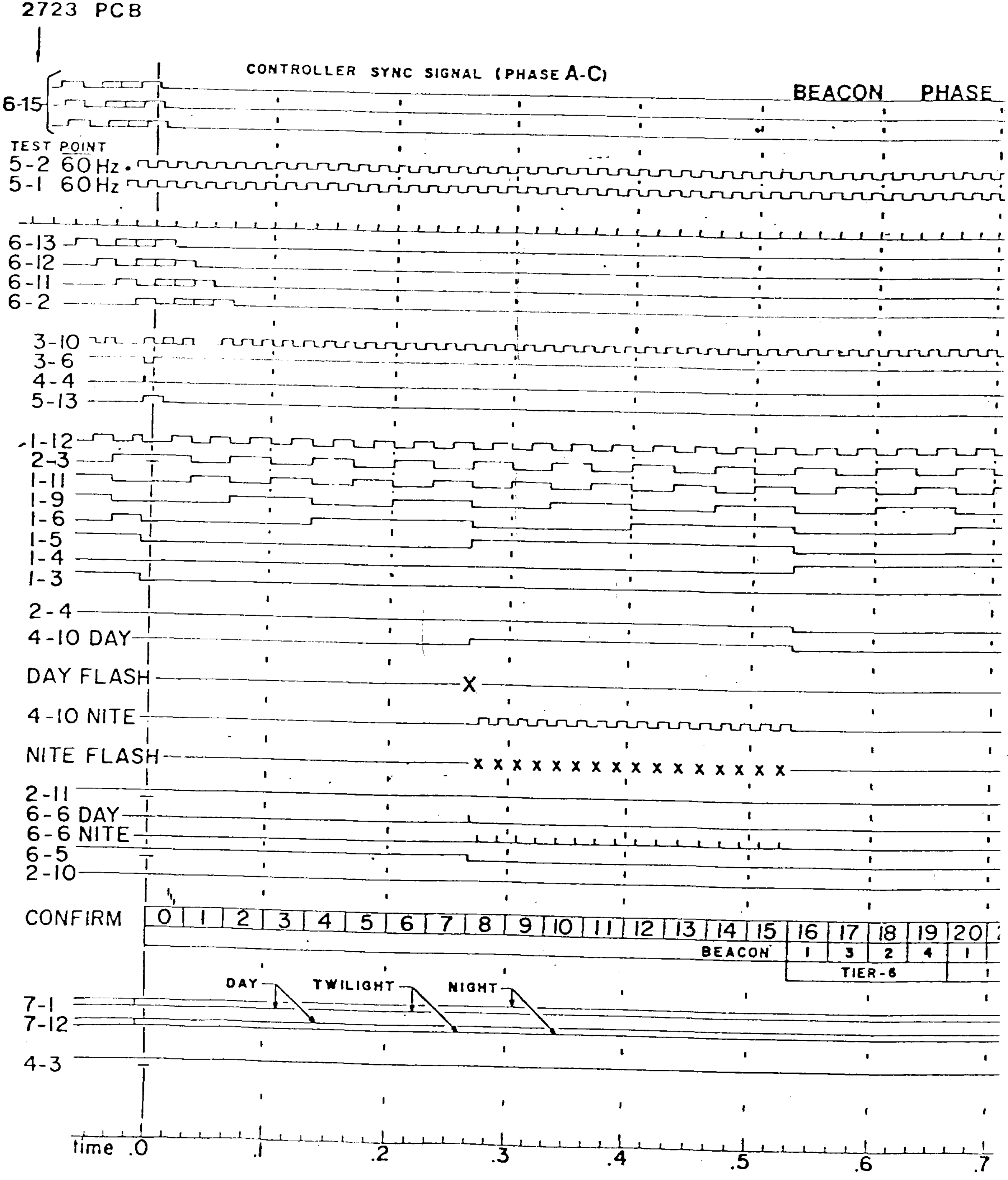

Figure 5-6. Coruscating Beacon Digital Signals Timing Diagram (60 Hz, D-1855)

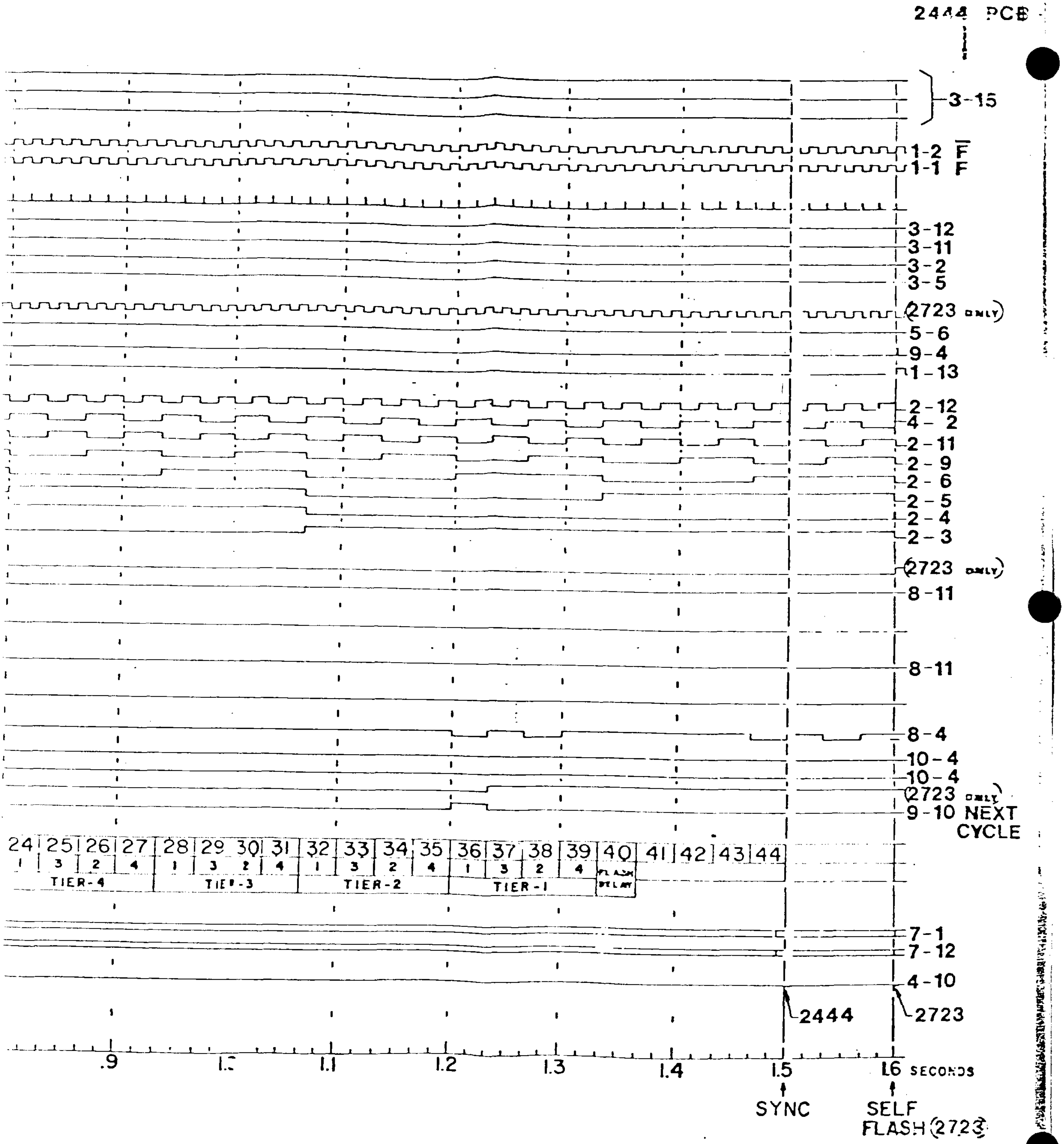
2444 PCB
3-15
1-2 F̄
1-1 F
3-12
3-11
3-2
3-5
(2723 ONLY)
5-6
9-4
1-13
2-12
4-2
2-11
2-9
2-6
2-5
2-4
2-3
(2723 ONLY)
8-11
8-11
8-4
10-4
10-4
(2723 ONLY)
9-10 NEXT CYCLE
24 25 26 27 28 29 30 31 32 33 34 35 36 37 38 39 40 41 42 43 44
1 3 2 4 1 3 2 4 1 3 2 4 1 3 2 4
TIER-4
TIER-3
TIER-2
TIER-1
FLASH DELAY
7-1
7-12
4-10
2444
2723
.9
1.0
1.1
1.2
1.3
1.4
1.5
1.6 SECONDS
SYNC
SELF FLASH (2723)

SECTION 6

PARTS LISTS

6.1 RECOMMENDED SPARE PARTS

Quantity	Description	Part Number	Manufacturer
1 box of 10	Fuse, 8 A (120 V input)	KTK-8	Bussmann
	4 A (208/240 V input)	KTK-4	Bussmann
	2 A (480 V input)	KTK-2	Bussmann
2	Flashtube	1178	FTCA
1 per 3 Beacons	Varistor, metal oxide		
	(120 V input)	2508-01	FTCA
	(208/240 V input)	2508-02	FTCA
	(480 V input)	2508-04	FTCA
1	HV rectifier board assy*	2416 or 2480	FTCA
1	Timing & trigger board assy*	2723-02 or 2444-01	FTCA

---

*Denotes a variable assembly; select part number that matches assembly installed in your Coruscating Beacons (refer to Preface of this instruction manual).

6.2 ELECTRICAL REPLACEABLE PARTS (60 Hz Systems)

Designation	Description	Part Number	Manufacturer
C1	Capacitor, 2 µF, 4 kV	2834	FTCA
C2,C3	Capacitor, 100 µF, 2.5 kV	2052	FTCA
C4	Capacitor, 3 µF, 660 Vac	2060	FTCA
C5	Capacitor, 30 µF, 2.5 kV	2835	FTCA
F1,F2	Fuse, 8 A (120 V input)	KTK-8	Bussmann
	4 A (208/240 V input)	KTK-4	Bussmann
	2 A (480 V input)	KTK-2	Bussmann
FT1	Flashtube	1178	FTCA
K1,K2	Relay, DPDT, 24 Vdc coil	**3288-01**	**FTCA**
L1	Choke, flash	1101	FTCA
L2	Choke, burst	2848	FTCA
MOV-1	Varistor, metal oxide		
	(120 V input)	2508-01	FTCA
	(208/240 V input)	2508-02	FTCA
	(480 V input)	2508-04	FTCA
PCB-1	HV rectifier board assy	2416 or 2480*	FTCA
PCB-2	Timing & trigger board assy	2723-02 or 2444-01*	FTCA
PCB-3	Bleeder board assy, used only with P/N 2416 (PCB-1)		
	Mounts on C1	2087	FTCA
	Mounts on C2,C3,& C5	2088	FTCA
R1	Resistor, 30 KΩ, 225 W	**3361**	**FTCA**
R2	Reistor, 1500 Ω, 50 W	**3758-04**	**FTCA**
SW1,SW2	Switch assy, interlock	**2055-01**	FTCA
T1	Transformer, power, 60 Hz		
	(120 V input)	1517	FTCA
	(208 & 240 V inputs)	2280	FTCA
	(480 V input)	1525	FTCA
T2	Transformer, sense	2881	FTCA
T3	Transformer, trigger	**2882-02**	FTCA
TB1	Terminal block, 6-contact	**3289-06**	FTCA
TB2	Terminal block, 8-contact	2698	FTCA
TB3	Terminal block, 7-contact	2699	FTCA
TB4	Terminal block, 11-contact	**3289-11**	FTCA

*See footnote on page 6-1.

SECTION 7

SUPPLEMENTARY DATA

The following pages contain instructions for the options which have been included in your Coruscating Beacons.

3.8.2 Central AC System

3.8.2.1

Identification	Description
Tag No.	
EMLI-(No.) 1 thru 5	

3.8.2.2 Description

Manufacturer:	Exide Safety Sys; Randolph, MA 02368
Parts No:	Centaurus III-HID
Spec No:	P/N 39-113305-00
Material:	N/A
Weight:	N/A

3.8.2.3 Prescribed Service

Emergency lighting

3.8.2.4 Vendor

Exide Safety Systems

3.8.2.5 Special Cautions

See Centaurus III-HID User's Manual

3.8.2.6 Periodic Service

See Centaurus III-HID User's Manual

3.8.2.7 Parts List

See Centaurus III-HID User's Manual

3.8.2.8 Special Tools

See Centaurus III-HID User's Manual

3.8.2.9 Maintenance Instructions

See Centaurus III-HID User's Manual

3.8.2.10 Acceptance Tests

CENTAURUS III-HID

USER'S MANUAL

7.5 KVA

Exide Safety Systems Div.
39 Teed Drive
Randolph, MA 02368

TABLE OF CONTENTS

	PAGE
SECTION 1: Installation	1
SECTION 2: In Case of Trouble	24
SECTION 3: Special Installation Instructions	26
3.1 Remote Alarm Devices	27
3.2 Auxiliary Battery Installation	28
SECTION 4: System Description	30
SECTION 5: Specifications	34

1.1 CHECK CONTENTS OF SHIPMENT - Your Exide Centaurus Central AC System consists of 3 separate packages:

- 1 Inverter Cabinet
- 2 Battery Cabinets (knocked down)
- 1 Battery (set of 24 LEC-150 batteries)

Check each package for shipping damage, and for proper marking. The inverter carton should be labeled with ESSD P/N 39-451033-00. Special options or modifications are noted on a tag attached to the inverter. There are additional items packed inside the inverter cabinet. See Step 1.3.

Note: Notify the carriers immediately if any shipping damage is discovered.

1.2 PREPARE THE SITE - The Centaurus III-HID system must be installed on a clean, dry, level floor. The inverter cabinet weighs 490 lbs. (200 kg); the loaded battery cabinet weighs 1992 lbs. (905 Kg).

Leave at least 3 feet (1 meter) in front of the cabinets for ventilation and maintenance. Leave at least 3 feet (1 meter) over the cabinets for ventilation. Leave enough space at the left end for line and load wiring. The inverter cabinet will be installed on the left, the battery cabinet on the right.

1.3 UNPACK THE INVERTER - Remove the bands and the cardboard shroud. A forklift truck may be used to lift the inverter off the pallet. The cabinet key is taped inside the inverter compartment.

A bag is packed in the inverter cabinet, attached to the baffle plate above the transformer. Check the contents of the bag:

12 jumpers, lead straps "A"
6 jumpers, lead straps "B"
4 jumper cables, white, "C"
1 cable, white, "D"
1 cable, black
1 cable, red

29155

Check the nameplate inside the cabinet to be sure that the power rating and the line and load voltages correspond to the order. Check the option tag (inside inverter) against the order. Check the inverter for shipping damage.

Set the inverter into position, adjusting the feet to make the cabinet level. Remove the desired knockout blank for the line and load wiring (There are 3 at the left rear corner). See the line breaker table in step 1.4 to determine the proper breaker size. (see Figure 1-1).

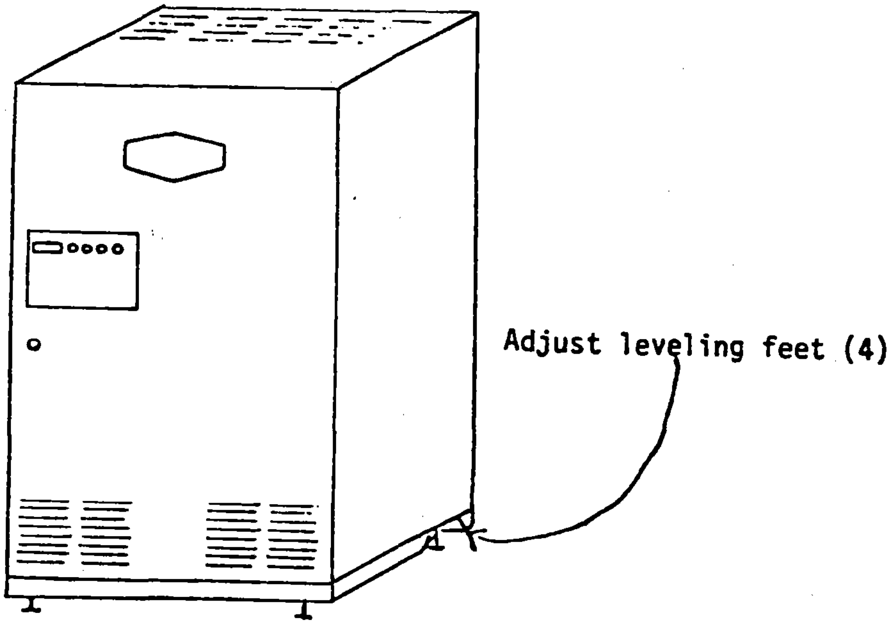

(Figure 1-1)

1.4 LINE BREAKER - The Centaurus III-HID must be connected to a properly rated line breaker, as follows:

RATING	BREAKER		
	120V	240V	277V
5.0KVA	75A	40A	40A
7.5KVA	100A	60A	50A
10.0KVA	125A	75A	60A

The line wiring must be compatible with the specified breaker.

1.5 TOOLS REQUIRED

1/4" and 1/2" socket wrench sets

open end wrench set

clamp-on ammeter and AC voltmeter

standard blade screwdrivers

service wire (see breaker table above)

wire cutters and strippers

100W test lamp

standard electrical fittings and hardware

1.6 LOAD WIRING

The Centaurus III-HID was equipped at the factory with the load voltage and breaker combinations specified for your installation. Remove the circuit breaker cover panel. A separate pair of wires should be brought into the wiring compartment for each load branch circuit. Connect the neutral wire to the neutral bus, and the black wire to the appropriate breaker. The cabinet must be grounded. Be sure the edge of the knockout hole will not cut through line and load wires. See Figure 1-2.

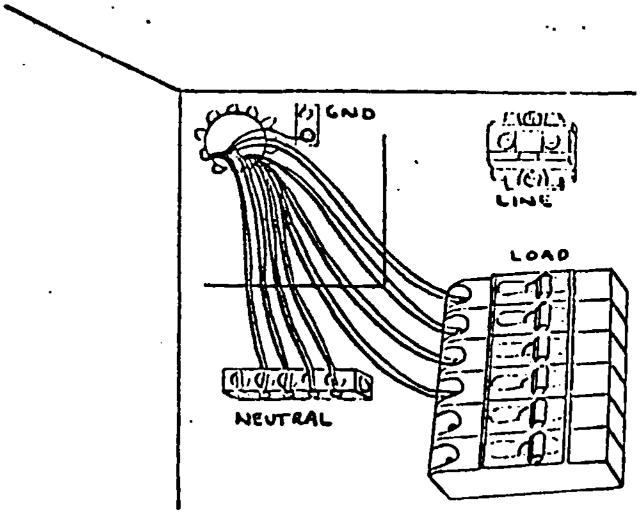

(Figure 1-2)

1.7 UNPACK BATTERY CABINET - Check the list below with the contents supplied for each battery cabinet.

1	base
2	shelves
1	door
1	left side panel
1	right side panel (with hinge)
1	back panel
1	top panel (louvred)
4	leveling feet
4	5/16 hex nuts
20	1/4-20 x 1/2" hex head bolts
48	1/4-20 hex nut
48	1/4 split lockwasher
1	lock and key

1.8 INSTALL LEVELING FEET - Screw the 5/16" hex nuts all the way onto the feet. Screw the feet into the base, from the bottom, so that about 1-1/4" of thread are exposed.

Set the base into position to the right of the inverter cabinet (tapped holes are in the rear edge). Leave at least 1" of space between the cabinets. Adjust the feet so that the base is level -- check with a spirit level. (See Fig. 1-3)

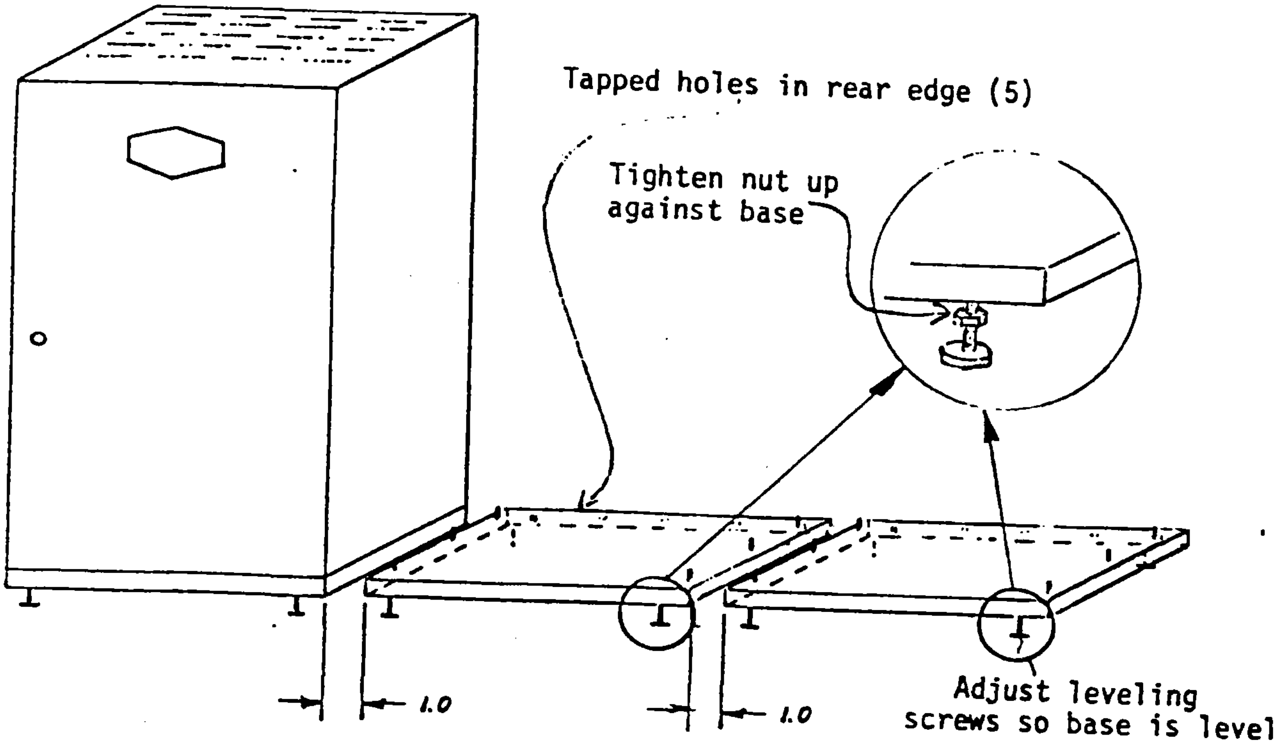

(Figure 1-3)

1.9 ASSEMBLE CABINETS - Remove the base to a clear working area. With the help of an assistant, place the side panels over the studs on the base, with the shelf rails facing in. See Figure 1-4.

With the side panels held upright, place the rear panel into position, and fasten the rear panel to the two side panels loosely with 1/4" hardware, starting at the top. The five bottom holes are tapped in the rear of the base, and do not need nuts. Attach lockwashers and nuts to the studs at the base of each side panel inside the cabinet.

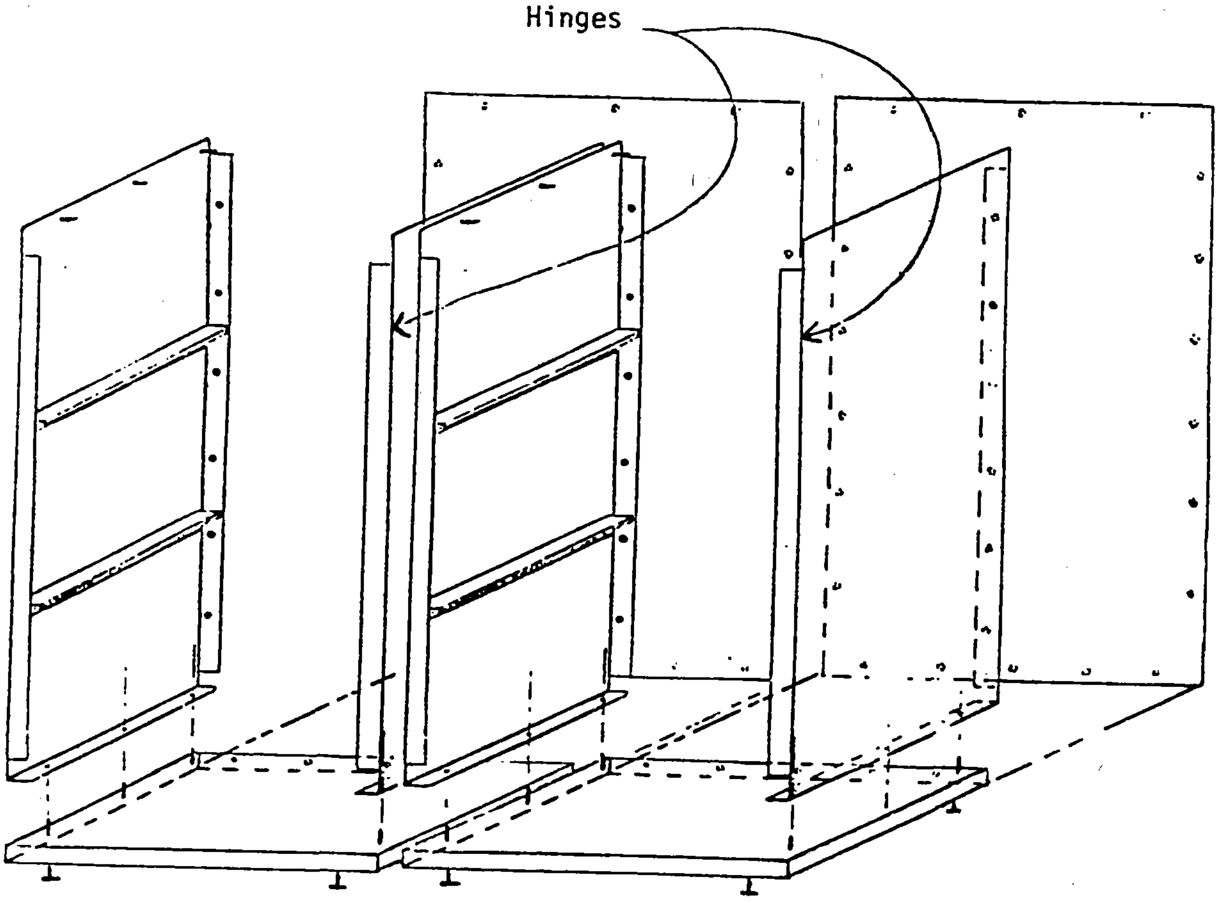

FRONT

(FIGURE 1-4)

Place the two shelves in position on the rails (mitered corner at rear). Do not fasten with hardware at this time. Make sure the cabinet shell is properly aligned, and tighten all hardware. Remove the shelves. Repeat these instructions for each cabinit.

NOTE: Do not overtighten the nuts on the studs in the cabinet base.

1.10 REMOVE KNOCKOUT from the left wall of the battery cabinet, - and the corresponding knockout from the right wall of the inverter cabinet. The two 4 gauge battery cables will run through these knockouts.

Place the battery cabinet shell in place next to the inverter cabinet. Line up the knockout holes by adjusting the feet, if necessary, and connect the cabinets with a threaded nipple or other suitable hardware. If the knockouts cannot be lined up, connect the cabinets with an offset nipple or flexible conduit. Tighten the locknuts on the leveling feet.

Remove a knockout from the left wall of the second battery cabinet, and the corresponding knockout from the right wall of the first battery cabinet. Two 4 gauge cables will run through these knockouts.

Place the second battery cabinet in place to the right of the first battery cabinet. Connect the cabinets as before. See Figure 1-5.

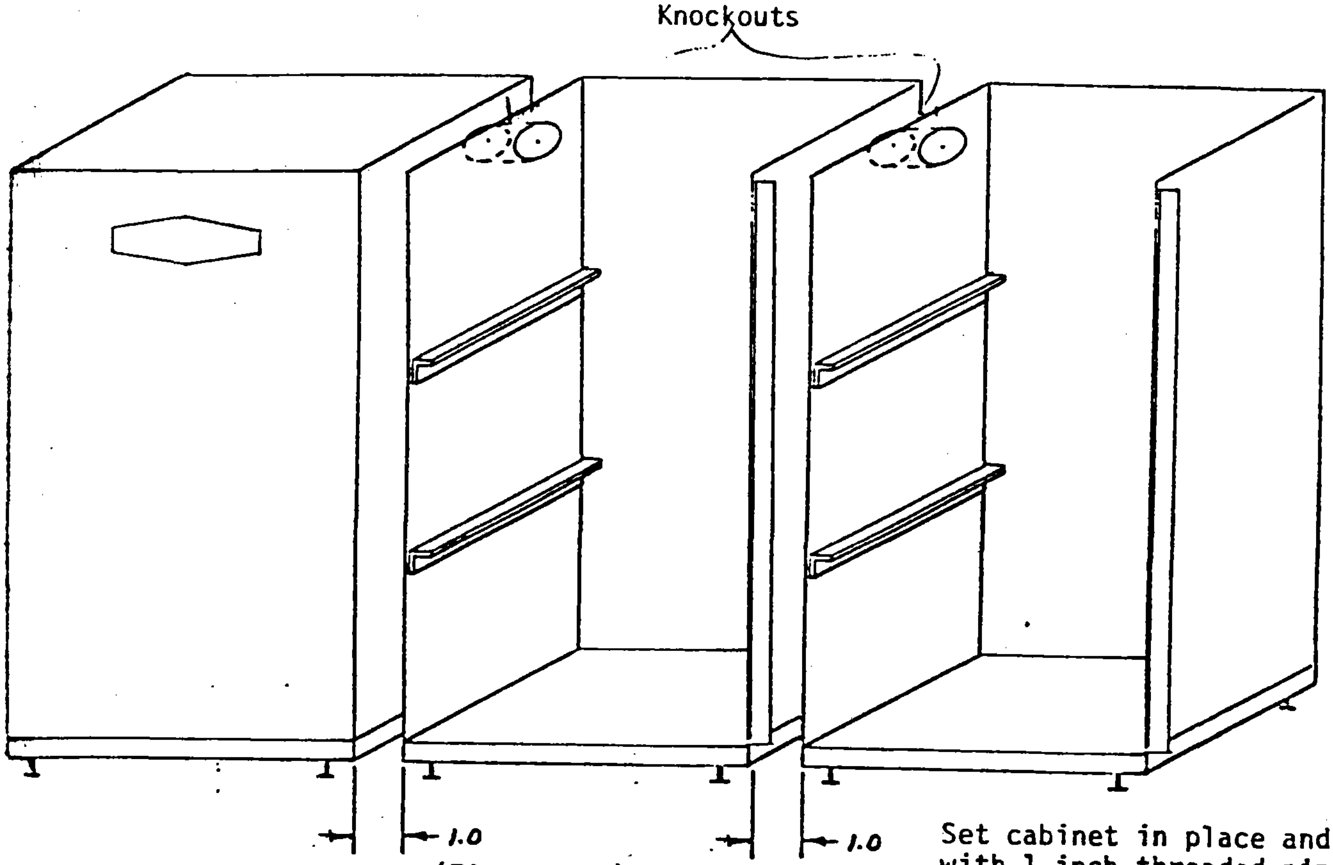

(Figure 1-5)

Set cabinet in place and connect with 1 inch threaded nipples or other suitable hardware.

1.11 UNPACK BATTERIES

Caution: Wear protective goggles or safety glasses when handling batteries.
Lead-Acid batteries contain sulfuric acid. Nickel-Cadmium batteries contain potassium hydroxide (caustic potash).

If electrolyte is splashed in eyes, wash immediately with fresh water for at least 30 minutes. Contact a physician immediately.

If electrolyte is spilled on skin, wash immediately with soap and water. Obtain medical treatment for any burns that result.

Handle batteries carefully to prevent mechanical damage, which could cause loss of corrosive electrolyte.

Insulate tools with electrical tape. Remove all watches and jewelry.

Check each battery for mechanical damage. The electrolyte in each cell should be visible above the tops of the plates.

CAUTION: The connected battery is a high-energy 144V DC source. It is a serious shock and burn hazard. Avoid body contact with the battery terminals.

1.12 LOAD BOTTOM SHELF - Install 4 LEC-150 batteries in each cabinet on the bottom shelf (base), being careful of polarity, as shown in the figure. The terminal polarity is marked on the top of the battery near each terminal. See Figure 1-6.

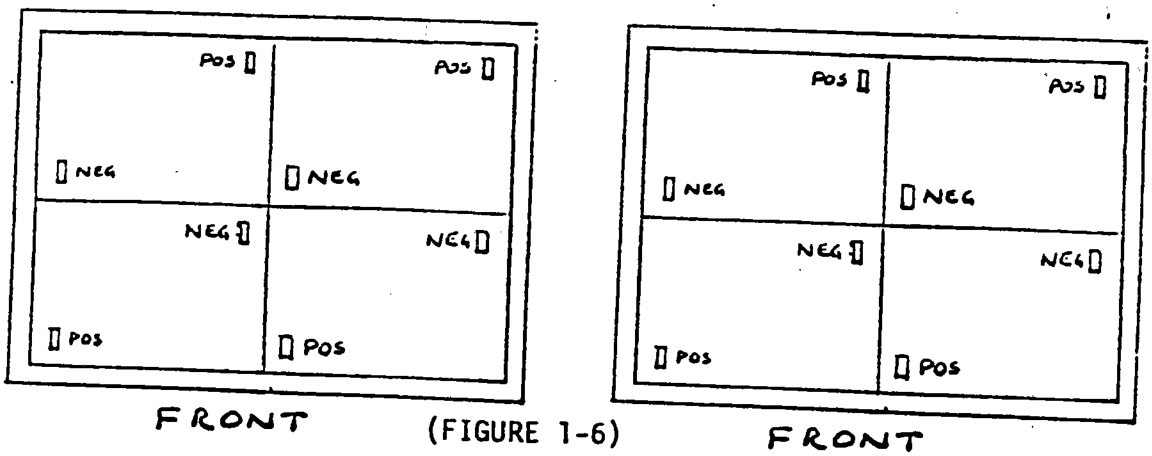

(FIGURE 1-6)

1.13 MAKE INTERCELL CONNECTIONS - Using 2 "A" jumpers in each cabinet, connect the negative terminal of each battery to the positive terminal of the battery to its right. Connect a "B" jumper between the rows. See figure 1-7.

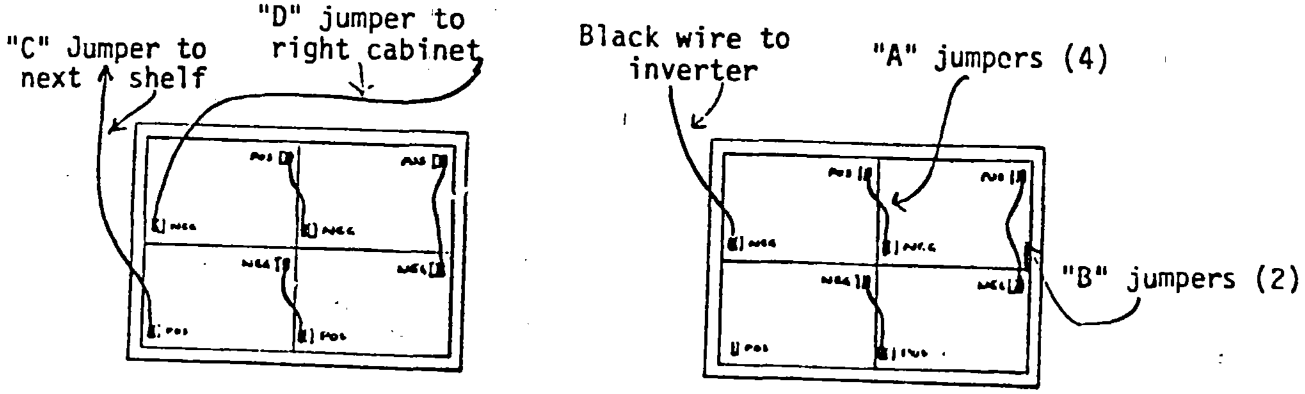

(Figure 1-7)

Connect the bare end of a "C" jumper to the left front POS terminal, and route it toward the rear of the cabinet. Connect the bare terminal end of the "D" jumper to the left rear NEG terminal of the left battery cabinet. Feed the other end (insulated) up the right rear corner, through the knockout into the right battery cabinet.

Check all connections to be sure they are tight.

Connect the bare end of the black cable to the left rear NEG terminal in the right cabinet, and feed the other (insulated) end up the left rear corner, through the knockouts in both cabinets, and into the inverter cabinet.

1.14 COVER THE BATTERIES with cardboard or heavy plastic to protect against accidental short circuits.

Install the second shelf, mitered corners to the rear on the rails, and secure with lockwashers and hex nuts. Feed the white "C" jumper from the first shelf up the left rear corner, and route the free end along the left side of the second shelf. Repeat these instructions for each battery cabinet. See Figure 1-8

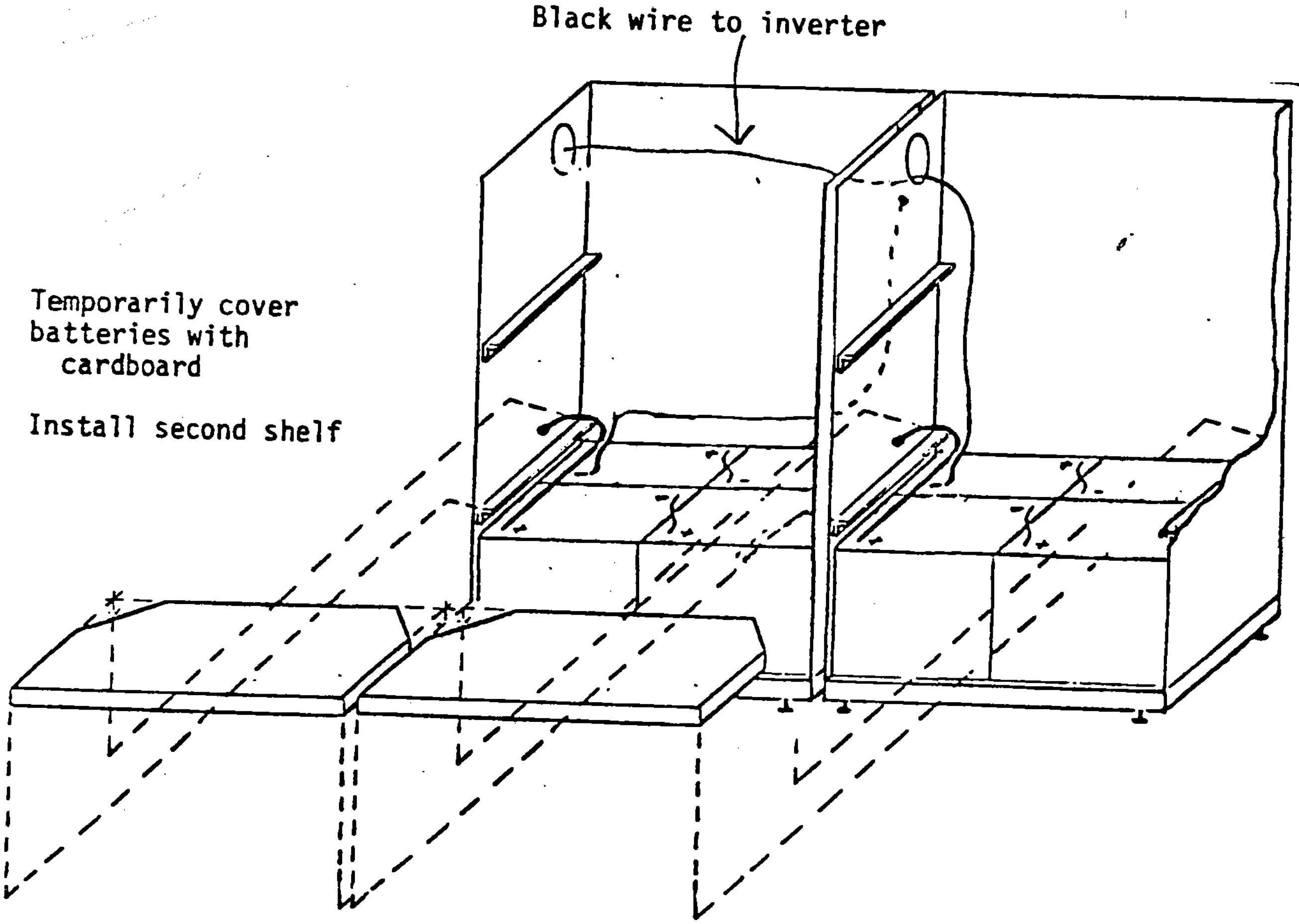

(Figure 1-8)

1.15 INSTALL four batteries on the second shelf, observing the same polarity as on the first shelf. See Step 1.12. Attach two "A" jumpers as before. Connect the two rows with a "B" jumper, and connect the bare end of a "C" jumper to the left front POS terminal. Repeat these instructions for each battery cabinet. See Fig. 1-9.

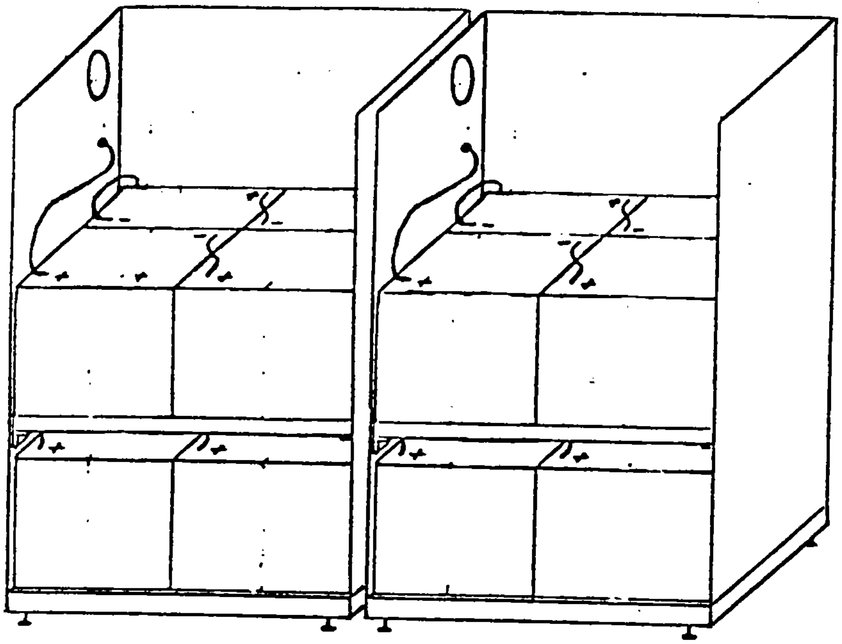

Install batteries on second sheet

(Figure 1-9)

1.16 ATTACH THE JUMPER from the first shelf to the left rear NEG terminal on the second shelf (completely remove the insulator from the terminal). Check all connections to be sure they are tight. Wipe the tops, and coat the terminals with No-OX-ID.

Remove the battery insulating cover from the first shelf and place it over the batteries on the second shelf. Repeat these instructions for each battery cabinet.

1.17 INSTALL THIRD SHELF on the rails, mitered corners to the rear, and secure with lockwashers and nuts. Feed the white "C" jumper from the second shelf up the left rear corner, and route it along the left side of the third shelf. Repeat these instructions for each battery cabinet. See Figure 1-10.

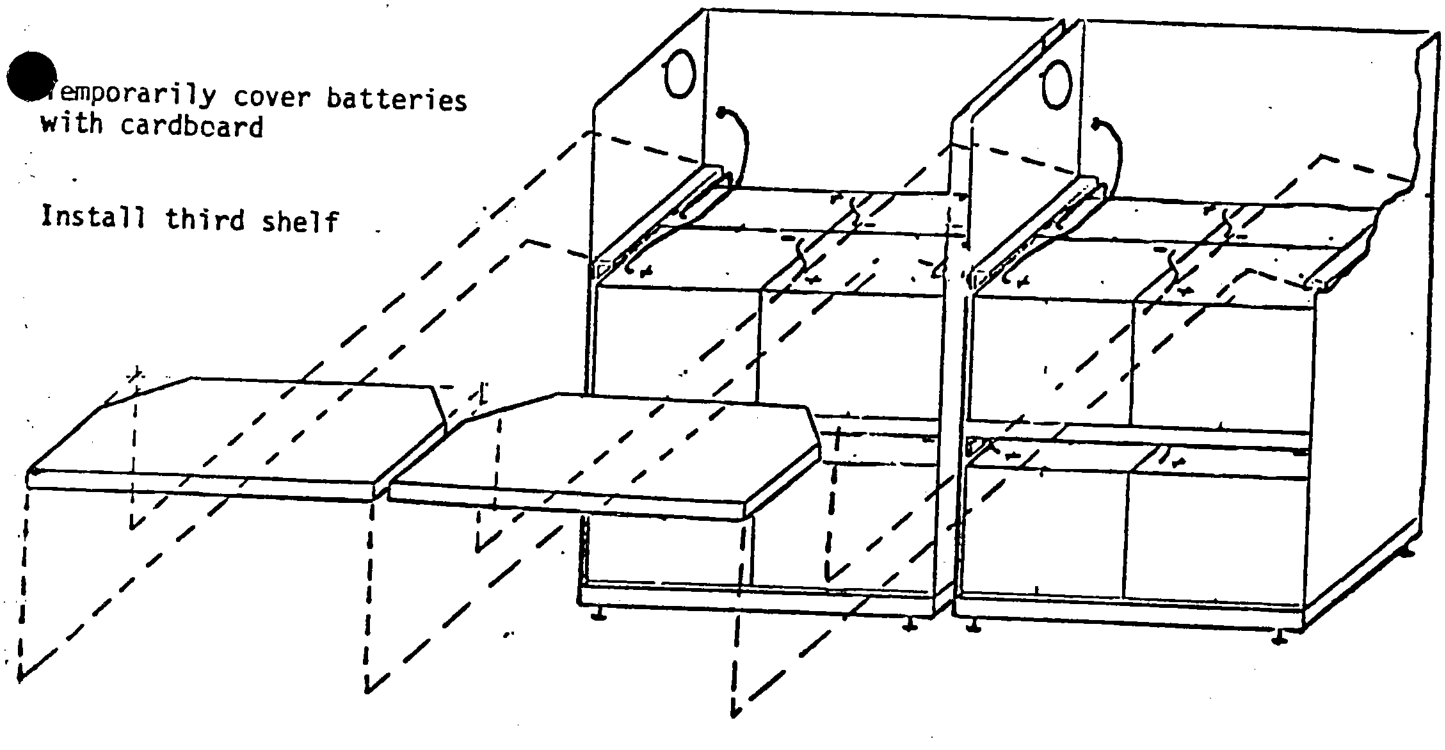

Temporarily cover batteries with cardboard

Install third shelf

(Figure 1-10)

1.18 INSTALL the 4 batteries on the third shelf, using the same polarity as on the two lower shelves (see step 1.12). Attach two "A" jumpers as before. Connect the 2 rows of batteries with a "B" jumper. Repeat these instructions for each battery cabinet. See Figure 1-10.

Red wire to inverter

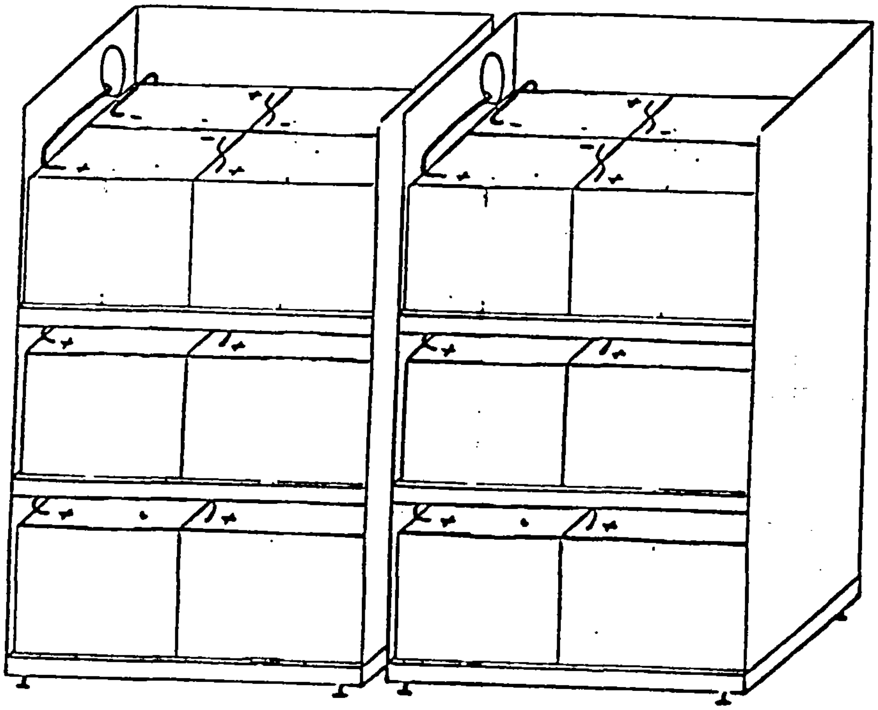

Install
batteries on
thirs shelf

(Figure 1-11)

1.19 ATTACH THE JUMPER from the second shelf to the left front NEG terminal on the third shelf (completely remove the insulation from the wire terminal). Check all connections to be sure they are tight. Be sure cables in the left rear corner of the cabinet are not pinched. Repeat these instructions for each battery cabinet.

Connect the remaining end of the "D" jumper to the left front POS terminal on the top shelf of the second battery cabinet (completely remove the insulation from the wire terminal).

CAUTION: The connected battery is a high-energy 144V DC source. It is a serious shock and burn hazard. Avoid body contact with the battery terminals.

1.20 CONNECT THE RED CABLE (bare terminal end) to the positive terminal on the left front battery of the third shelf in the left cabinet. Carefully feed the insulated end through the knockouts into the inverter cabinet.

1.21 GROUND THE BATTERY CABINET to the inverter cabinet. If, for any reason, the cabinets are not connected by metallic fittings, a separate ground wire (AWG 14 or larger) must be connected between the cabinets.

1.22 CONNECT THE BLACK CABLE to the NEG battery terminal in the inverter cabinet (completely remove the insulation from the end of the cable). Be sure that the connection is tight. See Figure 1-14.

1.23 WIPE THE TOPS and terminals of the batteries with a clean cloth. Coat the terminals with Exide NO-OX-ID. Inspect to be sure that all batteries have been installed with proper polarity. Label the batteries with the date of installation.

1.24 REMOVE THE COVER from the batteries on the second shelf, and place it over the batteries on the third shelf. Install the top on the battery cabinet, using bolts, lockwashers and nuts on the rear wall,. and lock washers and nuts on the side walls. Tighten all hardware. Repeat these instructions for each battery cabinet. See Figure 1-12.

Temporarily cover batteries with cardboard.

Install louvered top panel.

Remove all temporary cardboard covers.

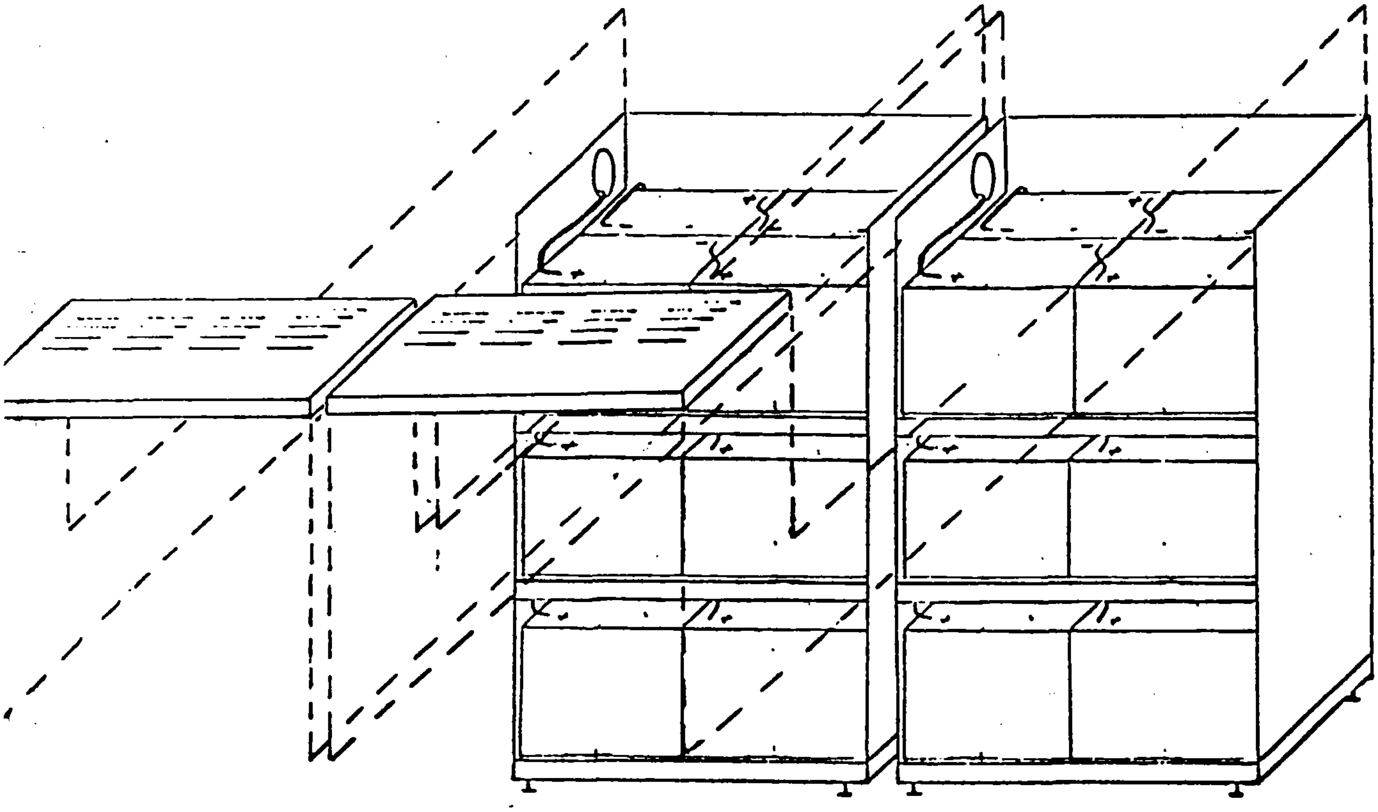

(Figure 1-12)

1.25 INSTALL DOORS on all the battery cabinets, using the remaining lockwashers and nuts. See Figure 1-13.

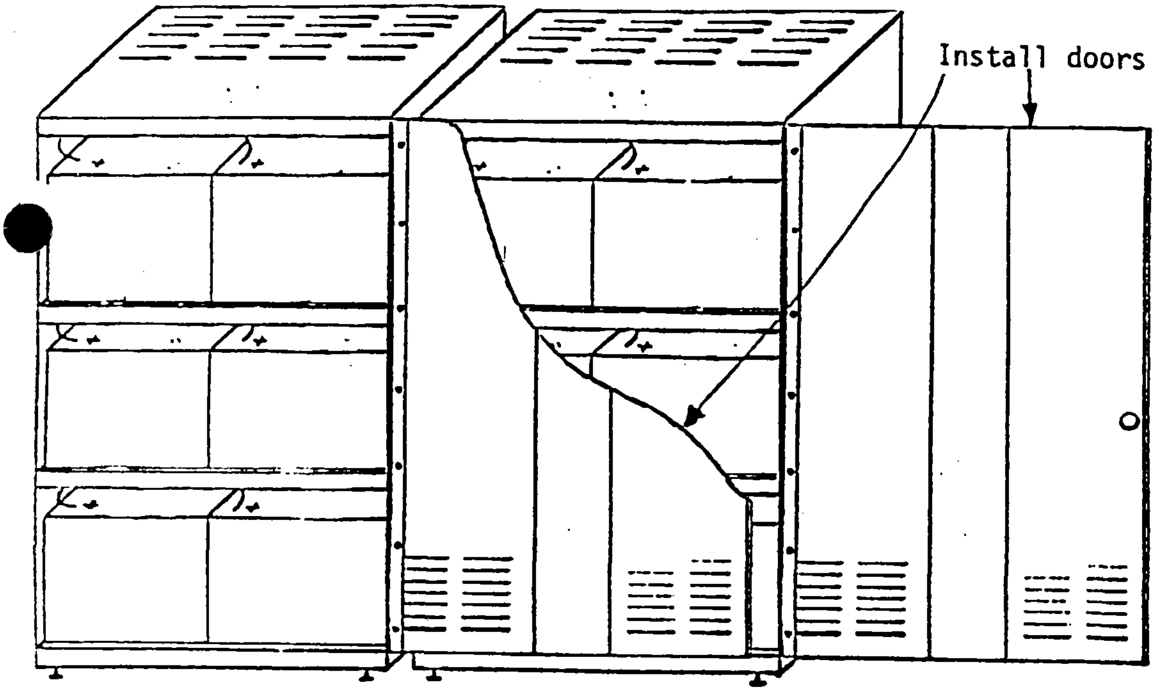

(Figure 1-13)

1.26 <u>TEST THE INVERTER CONNECTION</u> by connecting a 100 W, 120 V test lamp between the POS battery terminal in the inverter cabinet and the insulated end of the red battery cable. (do not use a neon tester) If the lamp does not glow, connect the red cable to the POS battery terminal. Use the lamp to test between each battery terminal and ground. It should not light.

If the lamp does glow, make sure the battery circuit breaker (CB1) is OFF, and no wires are damaged or pinched in either the battery or inverter cabinet. (See Figure 1-14)

Watch the DC voltmeter on the inverter signal panel while the battery circuit breaker is turned ON. The voltmeter should rise to approximately 150 volts and remain there. If the voltmeter appears to read low (138 volts or less), check the polarity of each battery again.

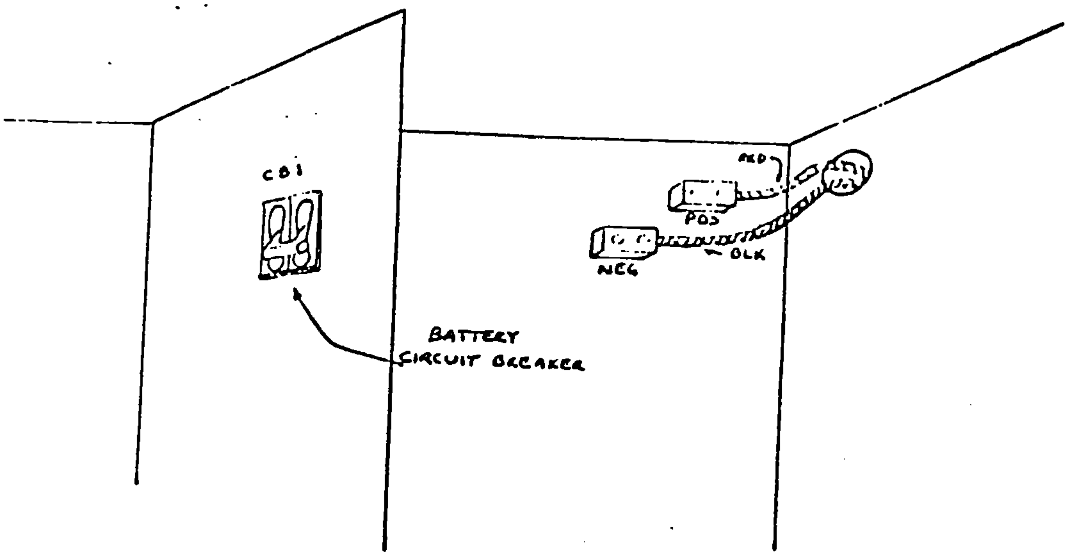

(Figure 1-14)

When the voltmeter indicates normal battery voltage, turn the battery circuit breaker OFF and proceed with the next step.

1.27 CONNECT THE UTILITY LINE to the line terminal block and the neutral bar. Make sure the line voltage corresponds to the voltage rating on the line terminal block and on the nameplate. (See Figure 1-15)

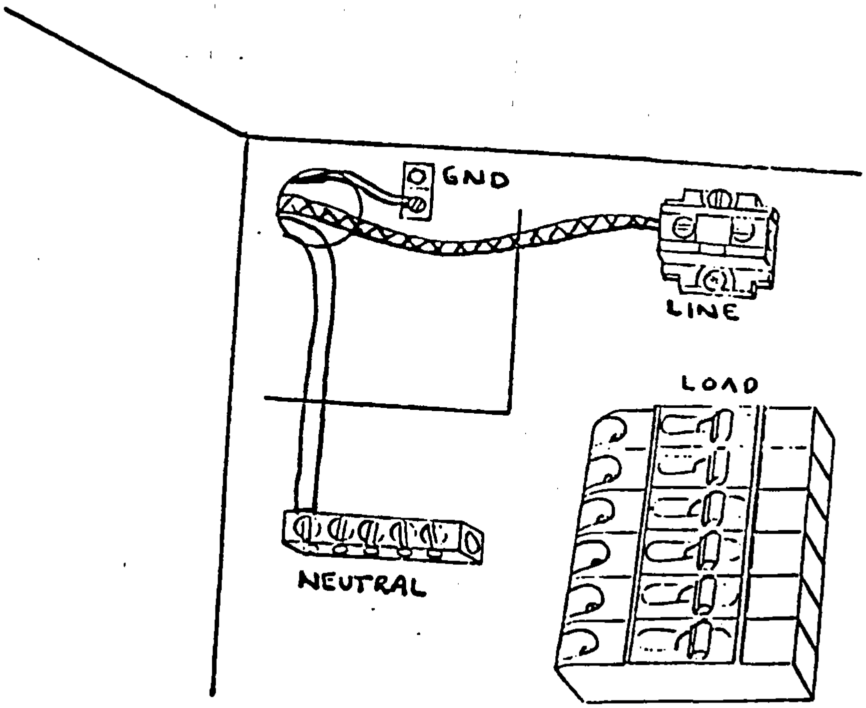

(Figure 1-15)

1.28 SYSTEM STARTUP - Turn on the load circuit breakers, and the battery circuit breaker (CB1). Set the inverter switch (S2) to the SERVICE position. Now apply AC power to the line.

The load should be energized in approximately 5 seconds. If the load does not turn on within the minute, or if any other trouble is experienced, see Section 2, "In Case of Trouble". When the load turns on, the orange "High Rate" charger lamp should light to indicate charger operation.

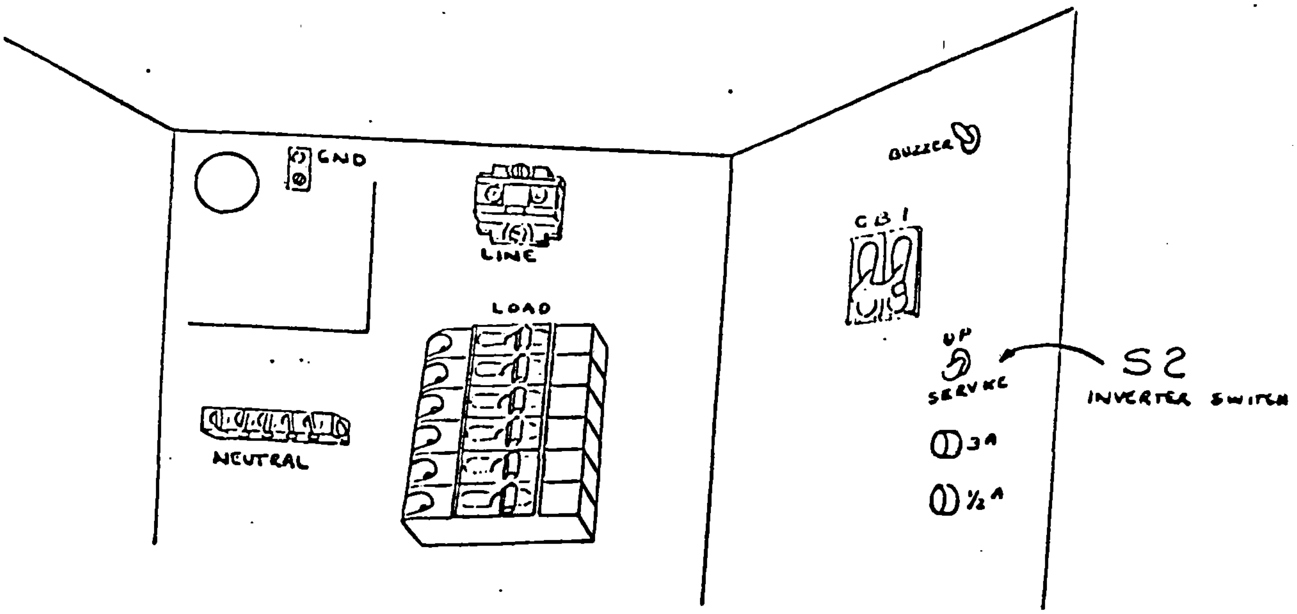

(Figure 1-16)

Set the inverter switch to the OPERATE position. Press the test button on the front panel. The inverter should turn on, and the load should continue to operate. Release the test button; the inverter will continue to operate for about 5 seconds, and the load will then be transferred back to the line.

Turn off the AC line. The inverter should start as before. If the buzzer switch is in the ENABLE position, the buzzer should sound, and the red ALARM lamp on the front panel should be lighted. The buzzer can be silenced by moving the buzzer switch to the DISABLE position.

Turn the AC line breaker on. After about 5 seconds, the system will transfer back to line operation, as before, and the charger will go on. If the buzzer has been disabled, it will sound again. Return the switch to the ENABLE position.

This completes the installation of the Centaurus System.

1.29 SYSTEM OPERATION - In normal operation, the Centaurus system connects the load to the ac line through a ferroresonant transformer. At full load, the load voltage is regulated to ± 5% at any line voltage between 105 and 130 volts (for 120V lines). Line watts will be approximately 10% greater than load watts with the charger not operating.

The charger takes about 2700 VA from the line. After an extended power failure (1.5 hours or more), the charger will remain on continuously for about 10-12 hours, then cycle on and off to maintain full battery charge. During normal operation, the charger will be on (for short periods) for about 10% of the time.

In the event of a power failure, brownout, or disturbance on the power line, the system will start the inverter and disconnect the load from the power line virtually instantaneously. The load will be powered by the inverter, through the ferroresonant transformer. At full load, the load voltage is regulated ± 5% during the entire battery discharge period. The inverter frequency is maintained at 60Hz ± 1%.

When the normal power line voltage is restored, the system will wait until the inverter and the power line are exactly in phase, then transfer the load back to power line operation. The transfer in either direction takes place in less than 1/4 cycle.

In the event of a load fault (short circuit on the load) the load circuit breaker will clear on either line or inverter operation. An overload may clear either the line or load breaker. A fault or overload condition cannot damage the inverter.

1.30 MAINTENANCE - The Centaurus III-HID central AC system is virtually maintenance-free. Normal housekeeping and cleanliness should be observed. Louvers and grills should be dusted or vacuumed annually. The area in front of the cabinet should be kept clean and dry.

If Exide LEC maintenance-free batteries are used, no water addition is necessary for the life of the battery. Maintenance type batteries should be checked on a regular schedule to keep the electrolyte at the recommended level.

The system should be tested on a regular basis. Testing can be accomplished by pushing the test button on the front panel, or by turning off the line breaker. Systems with LEC batteries should not be tested for extended discharges more than once or twice a year. Maintenance-type batteries may be discharged more frequently.

When the system transfers to line operation after a test, be sure the charge indicator lamp (orange) is lighted, indicating that the charger is operating properly.

SECTION 2

IN CASE OF TROUBLE

If the installation and operating instructions are followed carefully, you should encounter no difficulty with the performance of the system. In case any problem arises, consult the chart below. If the system cannot be made to perform properly after using the chart, notify your Exide Lightguard distributor, or Exide Lightguard, ESB Incorporated, 39 Teed Dr., East Randolph, MA 02368.

TABLE 2-1

SYMPTOM	POSSIBLE CAUSE AND CURE
Battery circuit breaker won't hold.	Check battery polarity. Change if necessary. Be sure line and load wiring are correct. If the ac line is connected to the load terminals, fireworks may result.
Line breaker trips immediately.	Wrong line voltage. Check voltages. Line and load wiring reversed. Check and correct wiring.
Line Breaker trips after a few minutes of operation.	Overload: measure load VA and adjust as necessary. Line breaker too small. See Section 1.4.
Load breaker trips after a few minutes.	Overload: measure load VA and adjust as necessary.
Load breaker trips immediately on system start-up.	Load fault: check wiring and clear load fault.
System will not start when line is turned on.	Line wiring incorrect. Check for proper voltages at the line input terminals. Check temperature; system must be stored in area above 32ºF (0ºC) and below 105ºF (40ºC) for 24 hours before operation.
System works on ac line, but will not transfer to inverter.	Inverter disabled: check switch S2 (figure 1-8). Switch should be in enable (operate) position.
System transfers to inverter, but will not transfer back to line.	AC line breaker may be tripped. Check breaker.
Battery circuit breaker trips during transfer from line to inverter, or back to line.	Consult distributor.
System transfers to inverter, but inverter turns off after a few seconds.	One or more cells reversed. Check all battery polarities. Battery discharged. Charge for 24 hours & retest. Battery defective. Consult distributor.
Load Voltage too low (under 114V)	Overload: Measure load VA and adjust as necessary.

NOTE: Service on internal components should be done only by qualified technicians. Hazardous voltages exist at many points in the inverter assembly.

SECTION 3

SPECIAL INSTALLATION INSTRUCTIONS

3.1 REMOTE ALARM DEVICES - The Centaurus III-HID system has built-in monitor circuits to warn of low or high battery voltage due to charger failure. The circuits will also indicate that a power failure has occurred.

When an accessory electrolyte level detector is used, the monitor circuit will also warn of low electrolyte level.

If any of the above conditions should occur, the red "low battery" signal lamp on the front panel will light, and the buzzer will sound. A remote annunciator or other signal device can be operated at the same time by connection to the small terminal blocks in the wiring compartment.

The terminal board provides access to a SPDT relay contact, rated 3 amperes 120 VAC. To wire a remote device, select either the NO (normally open) or NC (normally closed) relay pole, as required, and the common. The terminal board also provides 24V AC fused for 1/2 Ampere.

The NO and NC contacts are shown labeled in the alarm mode. For examples of wiring a remote device, see figure 3-1.

3.2 AUXILIARY BATTERY INSTALLATION - The Centaurus III-HID System is normally rated at a 1.5 hour protection period. The protection period at full rated load can be extended to 4 hours by the installation of an auxiliary battery. The auxiliary battery will usually have the same rating as the original battery.

Install the auxiliary battery cabinet in a suitable location. The best place is adjacent to the main cabinet, which results in the shortest wire runs. Very long wire runs between cabinets may result in a reduction of the 4.0 hour protection period.

The auxiliary battery kit consists of a battery cabinet, 24 batteries and jumpers for interconnections. Follow the battery cabinet assembly instructions in steps 1.7 through 1.20.

The proper wire size for battery interconnection depends on the inverter power rating and the wire run. Measure the total length, and determine the wire size from the table below.

TABLE 3-I

WIRE SIZE, AWG*

MODEL 3 SP. CENTAURUS III-HID	CONDUIT RUN, FEET				MAX CURRENT,A
	0-5	10	20	40**	
5.0	8	6	4	2	25
7.5	6	6	3	1	37.5
10.0	6	4	2	00	50

*based on 0.2 volts drop each wire
**for larger runs, consult factory

Use the long interconnection cables supplied with the kit (one red, one black), or fabricate cables of suitable length. Use crimp or compression terminals for connection to the battery posts. Ring lugs are recommended over spade lugs. Connect the black cable to the left front negative terminal on the first shelf of the main battery cabinet, and to the corresponding terminal in the auxiliary battery cabinet. Connect one end of the red cable to the battery cabinet left rear positive terminal on the third shelf of the main battery cabinet.

CAUTION: Before connecting the remaining terminal, connect a 120 Volt test lamp between the cable end and the positive terminal of the auxiliary battery. If the lamp glows, even dimly, check all battery polarities before proceeding.

Reversal of one or more batteries in this connection can cause batteries to explode.

When test lamp remains dark, connect the remaining positive terminal to the fuse on the positive terminal in the auxiliary cabinet. Complete the cabinet assembly as in steps 1.22 through 1.26. This completes the installation of the auxiliary battery.

SECTION 4

SYSTEM DESCRIPTION

The Centaurus III-HID Emergency Lighting System is a battery-powered inverter-charger intended for use as a central source of emergency ac power for lighting circuits and critical loads in the event of utility power failure. The Centaurus system is connected between the utility ac line and the critical load or other selected emergency branch circuits. The selected loads will continue to receive power during the utility ac power failure. The Centaurus III-HID is characterized by extremely rapid transfer from ac line to inverter operation, and a true sine-wave output. It is fully compatible with all classes of high-intensity-discharge (HID) lighting systems.

Figure 4-1 shows the block diagram of the Centaurus system. The ac power line is connected to the system through a transfer switch. The transfer switch is a fully solid-state switch with very rapid response capabilities. When the switch is closed, the utility ac line is connected to the Centaurus system, and to the selected branch loads. The loads are isolated from the utility line by a ferroresonant transformer.

During periods when the ac line is normal, the transfer switch will be closed, energizing the loads by the ac line. The line will also be connected to the Centaurus battery charger and the system monitoring and control circuitry. The charger will recharge the battery within 12 hours following a utility power failure, and will thereafter maintain the battery in a fully charged condition.

When a utility power failure occurs, the system control circuits sense the failure and disconnect the line from the load by opening the static transfer switch. The branch circuits are now isolated from the power line. After the static switch is open, the inverter will be started by the control circuit. The inverter transforms power from the 144V storage battery to ac power at the proper voltage and frequency to operate the emergency branch circuits.

The inverter supplies power to the load through the power transformer. In addition to adjusting the battery voltage to the proper load voltages, the transformer isolates the ac load from the inverter and battery.

The inverter will supply ac power to the branch circuits until the battery is completely discharged. For lead-acid batteries, this is defined as a discharge to a terminal voltage of 126 volts. Typically, the inverter will operate for 1.5 hours at rated load. At the end of this time the inverter will automatically turn off to prevent excessive discharge and possible damage to the battery.

When the utility ac power is restored, the restoration is sensed by the system control circuit. The control circuit closes the static transfer switch, reconnecting the ac line to the loads, and also to the battery charger. If the utility power is restored before the inverter has turned off, the control circuit automatically turns the inverter off when the transfer switch closes.

The Centaurus III-HID battery charger is a two-state voltage-controlled charger. After a power failure, and following restoration of utility power, the charger will turn on automatically to recharge the battery. The control circuit monitors the battery voltage continuously. Near full charge, when the battery terminal voltage reaches the maximum charging voltage (upper charge limit), the charger will turn off automatically. For a short period following turn-off, no charge will be delivered to the battery. During this period, the battery terminal voltage will slowly decrease. At a certain point, the charge control circuit will turn the charger on again, and the cycle will be repeated. The cycle will operate continuously to charge the battery, and keep it fully charged without overcharging. This charge regime has been designed specifically for charge maintenance of Exide LEC series batteries, particularly recommended for emergency lighting applications.

The utility line supplies power for the load, the charger, and to overcome the losses in the system. The sizing of the line circuit breaker may be done with the aid of line current ratings in Section 1.4 of this manual.

The Centaurus III-HID system is provided with protective circuitry against improper loading or connections. In the event of a load fault (short circuit), the inverter will operate continuously without damage. Output current is limited to approximately twice the rated load current at zero load voltage. If the load fault is removed, the system will then provide normal output power.

The system will withstand short overloads, and will maintain usable output voltage at up to 40% overload for brief periods. Sustained overloads will clear properly sized line and/or load breakers.

Improper battery connection is protected by a battery circuit breaker and a reverse-connected silicon rectifier. The breaker will clear automatically (will not hold) if the battery is reverse connected. The breaker is located within the wiring compartment of the inverter assembly.

CENTAURUS HID

SPECIFICATIONS (at 25°C Nominal 120V Line Voltage, except as noted)

	CENTAURUS III-HID		
MODEL NUMBER	5.0	7.5	10.0
OUTPUT POWER, VA	5000	7500	10000
INPUT VOLTAGE	120, 208, 240 or 277 VAC, 60 Hz, single phase		
OUTPUT VOLTAGE	120,240&277 VAC 60 Hz single or in combination, or 208V single phase		
OUTPUT FREQUENCY	Line Frequency, if present, or 60Hz ± 1%		
OUTPUT VOLTAGE REGULATION			
Line Operation	± 5% at full load, 105 to 130 V input*		
Inverter Operation	± 5% at full load for specified discharge period		
BROWNOUT PROTECTION	will transfer to inverter at 102 V minimum*		
TRANSFER TIME	3 milliseconds maximum		
TOTAL HARMONIC DISTORTION	Less than 10% at full resistive load		
PROTECTION PERIOD			
One Battery	1.5 hours at rated load		
Two Batteries ("A" Suffix)	4.0 hours at rated load		
RECHARGE TIME	12 hours		
EFFICIENCY	measured at rated load, unity power factor		
Line Operation (Throughput)	92% minimum		
Charger	typical		
Inverter Operation	85% minimum		
[illegible]ATING TEMP. RANGE	0° to 40°C (32° to 105°F)		
INPUT VA (Including Charger)	7700	10200	12700

The Centaurus inverter uses a highly reliable silicon controlled rectifier (SCR) circuit in a standard parallel configuration. The charger, likewise, is an SCR phase-controlled type, with constant current control. These circuits are generally immune to damage from transients and surges on the ac line.

The Centaurus III-HID system is equipped with visual and audible indicators to monitor operating conditions. A green "ready" lamp indicates that the system is connected to a normal utility line. The amber "high rate" charge indicator indicates charger operation. It will be on steadily following a power failure. When the batteries reach full charge, it is normal for this lamp to flash on briefly every few minutes. The red indicator, coupled with an audible alarm, will be on during a power failure, and when the battery voltage is either too low or too high for any reason. The indicator will therefore warn of a charge failure. If the battery breaker should open for any reason, the buzzer and lamp will operate intermittently.

The buzzer can be temporarily defeated in case personnel are working in the area during any of the above conditions.

A push-button test switch, located on the front panel with the indicator lamps, can be used to test the operation of the system. Pushing the button transfers the system from the operation to inverter operation. When the switch is released, the system will wait for a few seconds before transferring back to line operation. The delay insures that a steady line is present. After transfer back to line operation, the orange charge indicator will turn on, indicating proper charger operation.

The inverter can be disabled, for inspection or maintenance, by a switch located within the wiring compartment. Also located within the wiring compartment are fuses for the failure alarm relay, and a terminal board for connection of a remote failure alarm.

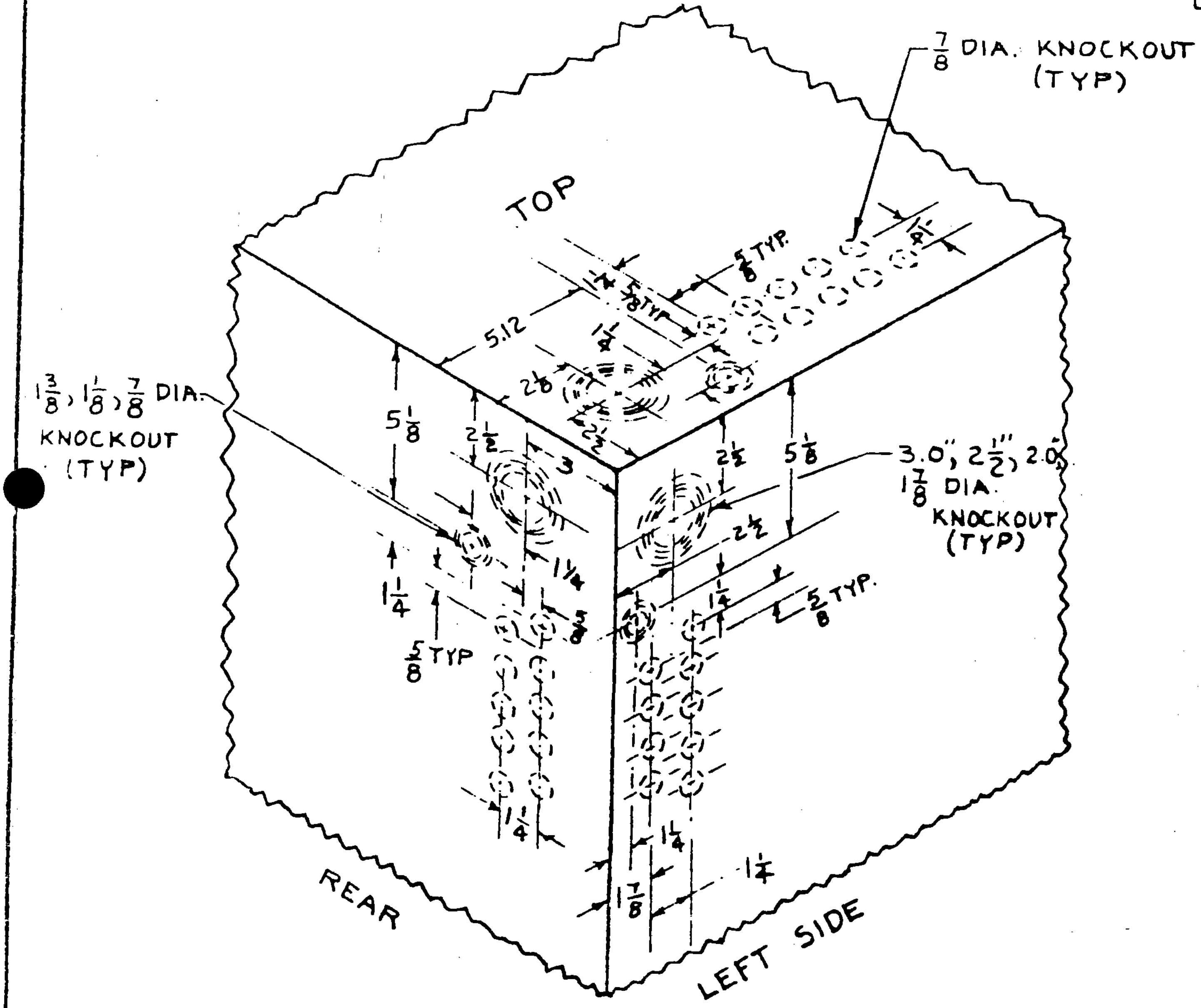
7/8 DIA. KNOCKOUT (TYP)
TOP
5/8 TYP.
1 1/4
5/8 TYP
5.12
1 1/4
2 1/8
2 1/2
1 3/8, 1 1/8, 7/8 DIA. KNOCKOUT (TYP)
5 1/8
2 1/2
3
2 1/2
5 1/8
3.0", 2 1/2", 2.0", 1 7/8 DIA. KNOCKOUT (TYP)
2 1/2
1 1/4
1 1/4
1 1/4
5/8
5/8 TYP.
5/8 TYP
1 1/4
1 1/4
1 7/8
1 1/4
REAR
LEFT SIDE

3.8.3 Miscellaneous Lighting Fixtures

3.8.3.1

Identification	Description
N/A	Misc Lighting Fixtures

3.8.3.2 O&M Instructions

The O&M instructions for the various types of lighting fixtures provided are identified in the following shop drawing submittals.

SERIES 44

Low Level Area Light

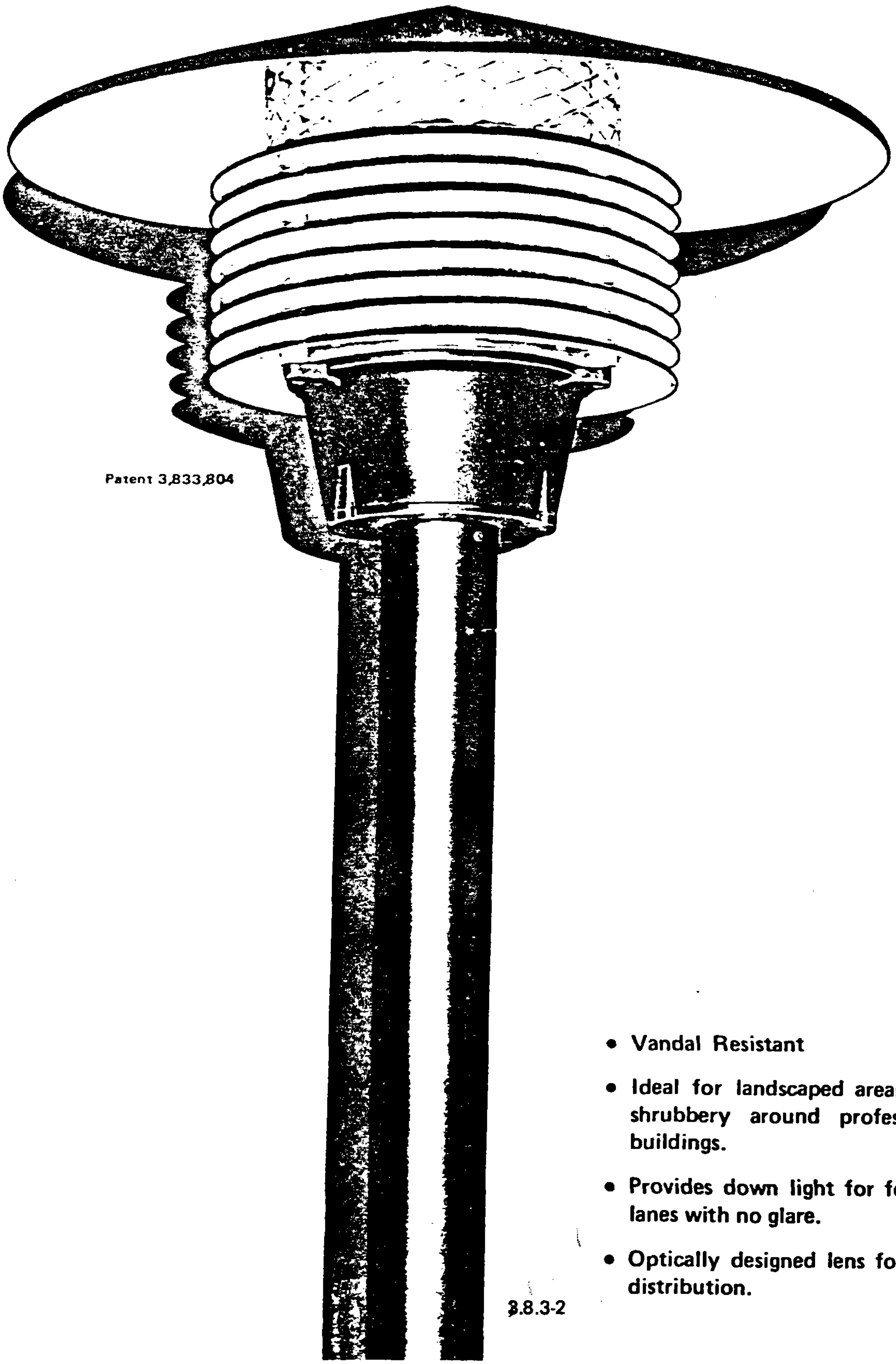
Patent 3,833,804

- Vandal Resistant
- Ideal for landscaped areas accentuating shrubbery around professional office buildings.
- Provides down light for foot paths and lanes with no glare.
- Optically designed lens for proper light distribution.

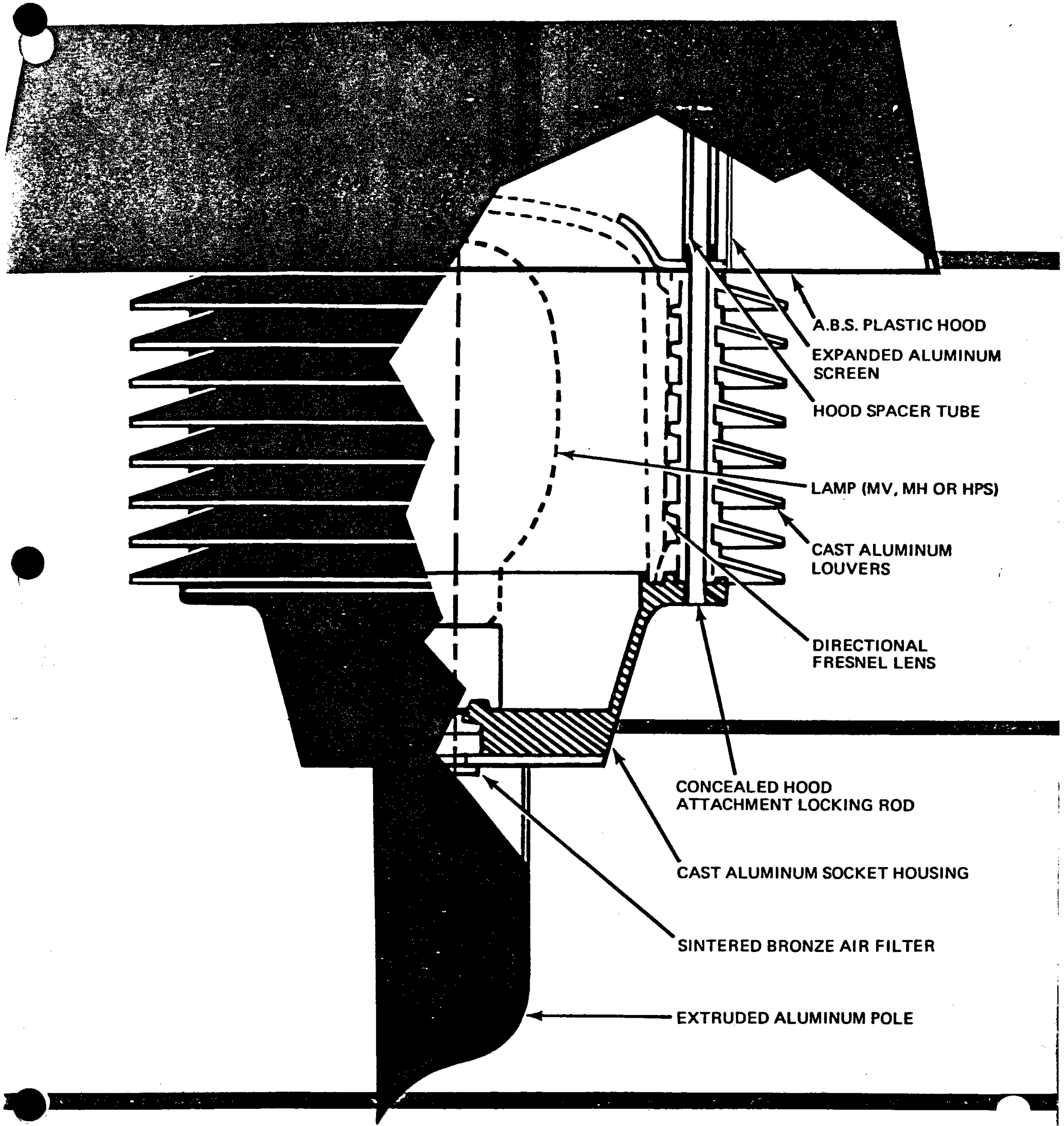

Available with mansard hood as shown or colonial style shape. Vandal resistant construction in both styles. Sintered bronze filter cleans all air entering sealed optical compartment. Auxiliary 180° inner reflector available for directional applications.

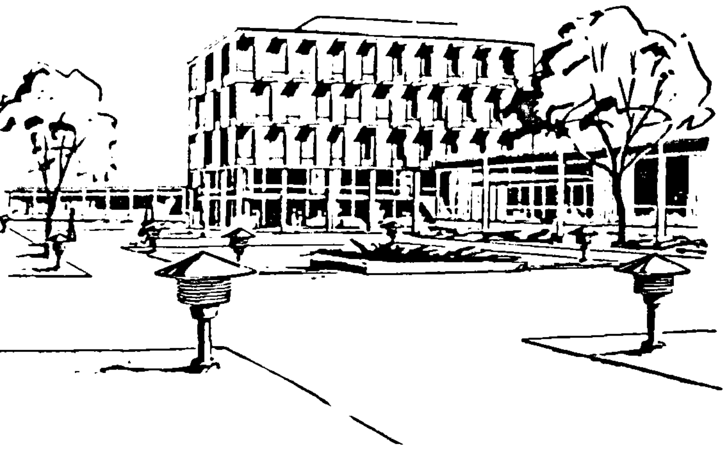

SPECIFICATIONS:

Lens is heat-treated clear glass with horizontal ribbing to direct rays of light through the louvers.

Louvers are die-cast aluminum, painted with non-glare matte finish. They protect refractor from damage and minimize glare.

Sealed optical system with sintered bronze filter built into mounting base removes dirt particles from air entering enclosed fixture. Assures brighter light and lower maintenance cost.

Cone and Mansard type hoods constructed of A.B.S. plastic with Korad finish on outer surface for color stability.

Reflector is optional. Made of Alzak* aluminum with specular surface to concentrate beam over 180° and eliminate back spill.

Fixture base is cast aluminum finished in matte paint.

Expanded aluminum metal guard above louvers prevents rocks or other debris from hitting refractor.

Light Sources — Mercury vapor, metal halide, or high pressure sodium encased and potted ballast for outdoor operation. Ballast can also be of indoor type mounted in building or other suitable sheltered location.

Porcelain mogul socket has heavily plated spring-supported center contact and lamp grip screw shell.

All hardware is stainless steel or corrosion resistant metal, including tamper-proof screws.

Standard color of fixture is black. Available with Cone style hood or Mansard style hood.

Pole is of 4½" O.D. extruded aluminum, brush finished and must be ordered separately.

*Trademark of Aluminum Co. of America

OUTLINE DIMENSIONS

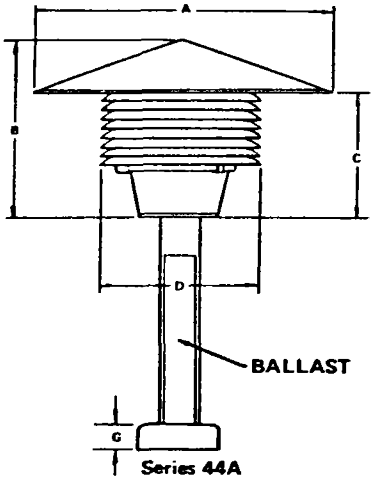

Series 44A
w/Cone style hood

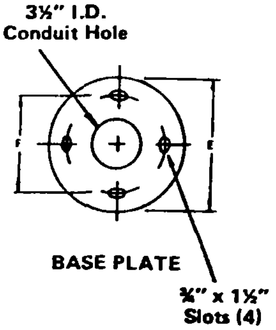

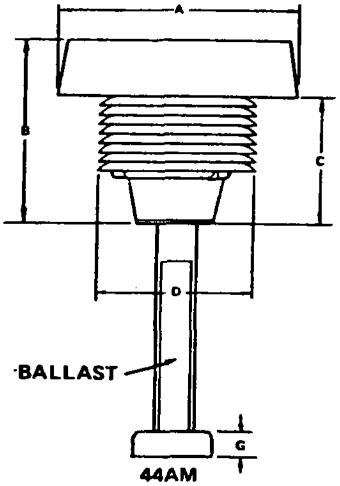

44AM
w/Mansard hood

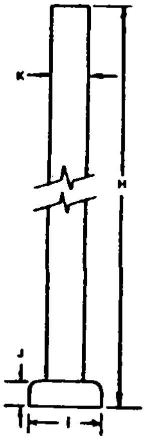

	A	B	C	D	E	F	G	H	I	J	K
44A	30"	17 15/16"	12½"	16"	10"	8"	4"	See Cat. Page 1.742	9¾"	4"	4½"
44AM	24"	18 5/16"	12½"	16"	10"	8"	4"		9¾"	4 "	4½"

Series 44 Catalog Listing

FIXTURES WITH POSTLINE TRANSFORMERS INCLUDED:

[illegible]	Cat. No.	Description	Shipping Wt. Lbs.
MERCURY VAPOR	44A-400-120	400 Watt - Cone Style	60
	44A-250-120	250 Watt - Cone Style	50
	44A-175-120	175 Watt - Cone Style	47
	44AM-400-120	400 Watt - Mansard Style	60
	44AM-250-120	250 Watt - Mansard Style	50
	44AM-175-120	175 Watt - Mansard Style	47
METAL HALIDE	44A-1400-120	400 Watt - Cone Style	62
	44A-1250-120	250 Watt - Cone Style	50
	44AM-1400-120	400 Watt - Mansard Style	62
	44AM-1250-120	250 Watt - Mansard Style	50
HIGH PRESSURE SODIUM	44A-2250-120*	250 Watt - Cone Style	61
	44A-2150-120*	150 Watt - Cone Style	[illegible]
	44A-2100-120*	100 Watt - Cone Style	47
	44AM-2250-120*	250 Watt - Mansard Style	61
	44AM-2150-[illegible]	150 Watt - Mansard Style	47
	44AM-2100-120*	100 Watt - Mansard Style	47

ALUMINUM POLES

Cat. No.	[illegible]	Description	Shipping Wt. Lbs.	Key No.
252-C18	18'	Pole w/base cover	40	2.8
252-C16	16'	Pole w/base cover	36	3.7
252-C14	14'	Pole w/base cover	32	4.8
252-C12	12'	Pole w/base cover	28	6.2
252-C10	10'	Pole w/base cover	24	8.2
252-C8	8'	Pole w/base cover	20	11.2
252-C6	6'	Pole w/base cover	18	16.5
252-C4	4'	Pole w/base cover	12	22.3

Key No. Cone Style — 1.87 Mansard Style 2.26

- Transformers are shipped separately for field mounting.
- Catalog Nos. above are for 120 operation. Other voltages available are 208, 240, and 277 only. Change Suffix to 208, -240 etc.

- * These fixtures available with 120 volt ballasts only.
- * For 180° reflector, add suffix "1" to catalog number.

WITH PE CELL

SAMPLE SPECIFICATIONS

Fixture: Luminaire shall include clear glass heat treated lens with horizontal ribbing to direct ray of light through the louvers. Louvers are to be of die-cast aluminum, painted with non-glare matte finish. Design of lens and louvers to be such that no glare is visible above the horizontal axis through the lamp centerline. Hoods are constructed of A.B.S. Plastic with Korad finish on outer surface. Expanded aluminum screen to be provided between top louver and inside of hood to eliminate possible entry of rocks or debris. Hood to be removable for maintenance by releasing three tamper-proof hood lock screws. Fixture base is to be of cast aluminum finished in matte paint. Optical reflector is to be made of Alzak*aluminum with specular surface. Unit shall have a sealed optical system with sintered bronze filter built into mounting base to remove dirt particles. An encased and potted transformer ________ watt for a ________ lamp at ________ volts shall be provided. All hardware to be stainless steel or corrosion resisting metal including tamper-proof screws.

Pole: Pole to be 4½" O.D. by minimum. 125" wall extruded aluminum tubing. Pole to have cast base of Almag alloy with split type anchor bolt cover. Finish to be brushed aluminum unless otherwise specified.

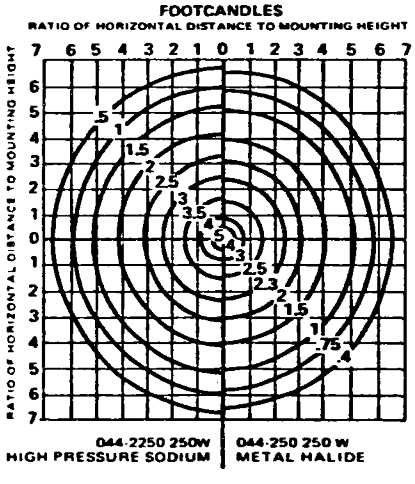

044-2250 250W HIGH PRESSURE SODIUM | 044-250 250 W METAL HALIDE

PHOTOMETRICS

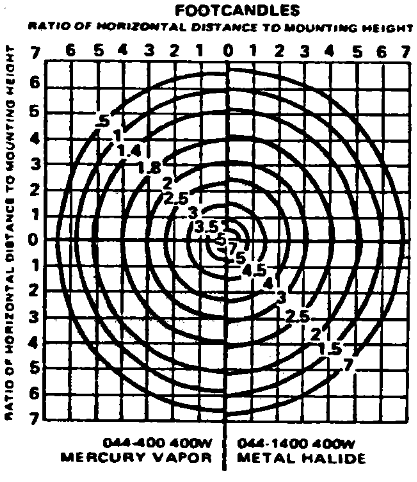

044-400 400W MERCURY VAPOR | 044-1400 400W METAL HALIDE

These isolux charts are for units mounted on 10' Pole. To convert the isolux chart to Mtg. Height other than 10' — Multiply F.C. Values by factor for that Mtg. Height.

FC CONVERSION CHART

MTG. HT. FT.	4'	6'	8'	10'	12'	14'	16'	18'	20'
FACTOR	6.25	2.78	1.56	1.00	0.69	0.51	0.39	0.30	0.25

GUARDIAN LIGHT
OUTDOOR LIGHTING
P.O. BOX 860 • OAK PARK, ILL 60303
312 378-2200

LIGHTING FIXTURE SUBMITTALS
FOR
LORD ELECTRIC CO.
FOR
SOLAR 10 MEGAWATT CENTRAL
RECEIVING PLANT
DAGGETT, CALIF.

BRIGHT WAY
Electrical Supply
16210 Manning Way ● Cerritos, Ca. 90701

(213) 926-9523
(714) 994-4590

RECEIVED
DEC 5 1980
TOWNSEND & BOTTUM INC.

GENERAL INFO-ALL TYPES

TYPE

HB, HC,
HH, HK, HJ,
HL

Mercmaster Enclosed and Gasketed HID Lighting Fixtures.

High Pressure Sodium, Mercury Vapor and Metal Halide.
UNILETS® for Use with Threaded Metal Conduit.

Applications

- Enclosed and gasketed HID lighting fixtures for use in tunnels, walkways, bridges, storage facilities, processing plants, parking lots, foundries, manufacturing plants, power plants and other locations where moisture, dirt, dust or corrosive atmospheres are encountered.
- Fixtures suited for Class I, Division 2; Class II, Divisions 1 and 2; and Class III.
- Suitable for use in wet locations.
- Wide range of wattages and voltages. Standard fixtures with choice of in-head ballasts for 50- to 400-watt lamps in 120, 208, 240, 277 and 480 voltages.
- Choice of light sources: high pressure sodium, metal halide and mercury vapor. HPS provides high lumens per watt and is the least expensive to operate.
- Choice of optical assemblies: (1) prismatic globe with or without guard thru 250W; (2) enclosed reflector with sealed lens assembly for 250W and 400W HPS and 400W MH and MV; (3) Type V closed prismatic glass refractor thru 400W (Types II, III and IV also available thru 400W and also polycarbonate globes for 100W maximum); and (4) Stylmaster Series for use with remote ballasts.
- Choice of mounting hoods: pendant (rigid or flexible), 25° angle stanchion, ceiling, and wall mounting.
- Porcelain reflector for standard applications and fiberglass reinforced polyester reflector for installations where luminaire is subject to exceptionally severe corrosive atmospheres.

Features

- Superior corrosion-resistance: copper-free aluminum mounting hoods, ballasts and guards with two-coat baked EPOXY finish, inside and out.
- Standard pendant mounting hood for rigid or flexible mounting. Balanced round design automatically hangs plumb when used with flexible hanger.
- Positive sealing. Hinge and bolt construction assures 360° compression at all points on gasket.
- One-piece ballast housing. Individual compartments for each component provide even heat dissipation for cooler operation and longer ballast life.

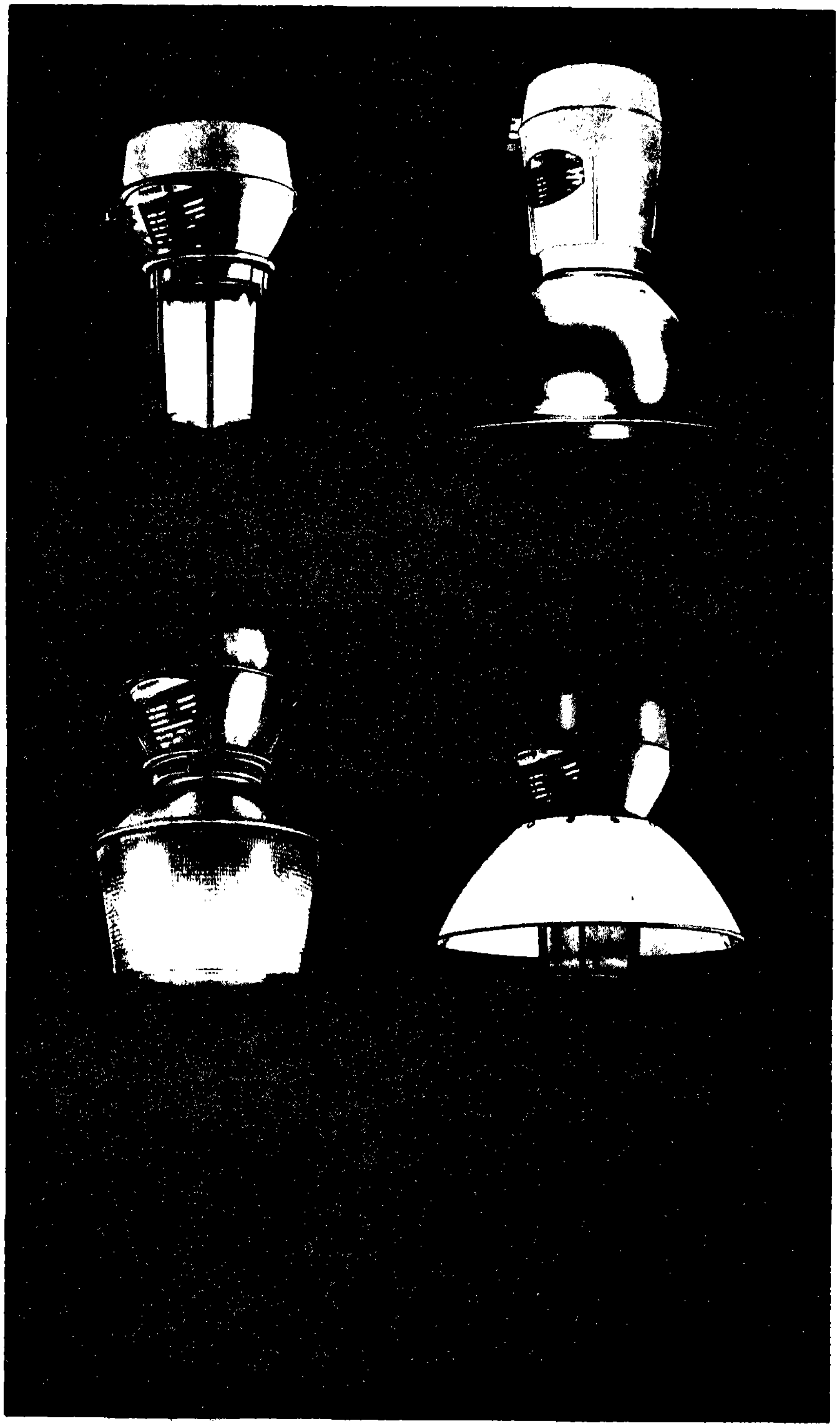

Appleton® ELECTRIC COMPANY

1701 W. Wellington Ave.
Chicago, Illinois 60657

TYPE

HB, HC,
HH, HK, HJ
HL

Mercmaster Enclosed and Gasketed HID Lighting Fixtures.

High Pressure Sodium, Mercury Vapor and Metal Halide.
UNILETS® for Use with Threaded Metal Conduit.

- Heat barrier isolates capacitor from ballast. Standard non-PCB bio-degradable capacitors installed in separate compartment.
- Mogul socket is furnished with 200° C welded leads, prewired to the ballast.
- Porcelain socket assures trouble-free operation in high ambient installations.
- HID Stylmaster fixtures ideal where mounting height is restricted and remote HID ballasts are required.
- Guards protect globes from damage. Guards snap on easily—spring-action stainless balls snap securely into detents of fixture.
- Prismatic glass globes and glass refractors are standard (plastic refractors also available) and thread directly into fixture housing. Eliminate glare and provide uniform light distribution.
- Vented reflectors result in cooler, dirt-free operation, increased lumen output.
- Reflectors secured to mounting hood with screws (furnished).
- Choice of reflector styles: white porcelain enamel or fiberglass-reinforced polyester; standard dome or 30° angle.
- Optional photocell provides automatic "on-off" control.
- All Mercmaster mounting hoods have provision for easy field installation of fuses in fixtures (see fuse kit listings).

Standard Materials

- *Mounting hoods, ballast bodies and guards:* aluminum (copper-free—4/10 of 1% max.).
- *Reflectors:* porcelain enamel steel and fiberglass-reinforced polyester.
- *Globes:* 50W-100W, threaded prismatic glass; 150W, 175W, and 250W, threaded heat-resistant prismatic glass.
- *Refractors:* 50W-150W, heat-resistant prismatic glass and plastic; 175W-400W, prismatic glass.
- *Enclosed reflector:* etched Alzak aluminum (copper-free—4/10 of 1%) with sealed, tempered heat and impact resistant lens.

Standard Finishes

- *Mounting hoods, ballast bodies, guards:* EPOXY-CLAD finish. Two-coat baked finish, electrostatically applied for complete uniform surface protection.
- *Steel reflectors:* white porcelain enamel.
- Polyester reflectors: natural finish.

Options

- Fuses for fixtures. See listings.
- MV and MH fixtures for quartz auxiliary lamps. Relay switch installed in fixture when specified. Add suffix **-MTE** to fixture catalog number for 120V thru 277V, and suffix **-480E** to fixture catalog number for 480V fixture.
- "Hot restart" emergency option, available for 50W-150W HPS only. Add suffix **-HRE**.

Compliances

- UL Listed.
- UL Standard 57 and 844.
- Suitable for use in wet locations.
- Class I, Division 2, Groups A, B, C, D. Class II, Division 1 and 2, Groups E,F,G.

References

- For additional data on lamp and lighting fixture selection, see general introduction to catalog.

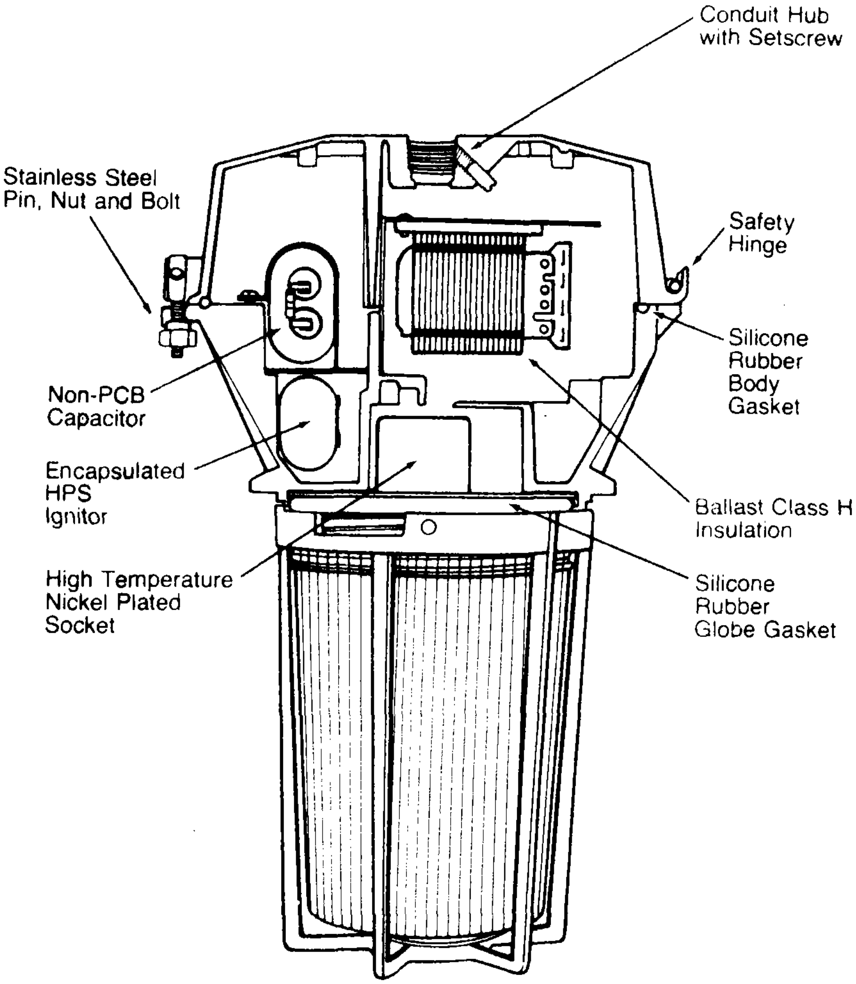

Appleton® ELECTRIC COMPANY

1701 W. Wellington Ave.
Chicago, Illinois 60657

Photometric Data: Mercmaster HID Lighting Fixtures.

TYPE
HB, HC, HH, HK, HJ, HL

Photometric data shown below is based on a 100 watt, E-23 1/2 (9,500 lumens) clear lamp. For candlepower values for 50 watt, use multiplier of .35; for 70 watt, .61, and for 150 watt, 1.68.

No reflector
Spacing to Mtg. Ht. Ratio 2.00:1 Guard .95

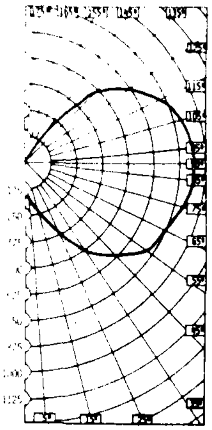

Standard Dome
Spacing to Mtg. Ht. Ratio 1.66:1 Guard .88

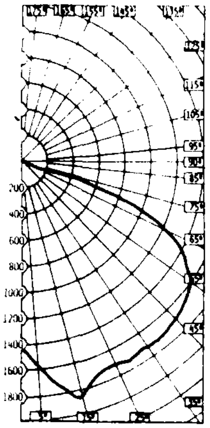

30° Angle
Guard .90

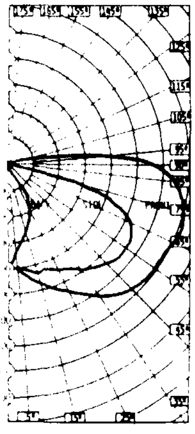

Type V 8" Refractor
Spacing to Mtg. Ht. Ratio 1.90:1

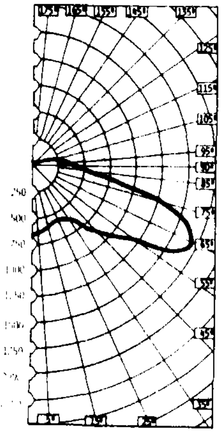

No Reflector
Effective Floor Cavity Reflectance (Rfc) is 20%

%Ceiling Rcc		80			70			50			30			10			0
%Walls	Rw	50	30	10	50	30	10	50	30	10	50	30	10	50	30	10	0
Room Cavity Ratios	1	.696	.648	.604	641	.598	.556	.539	.505	.475	.444	.419	.395	.358	.338	.320	277
	2	.580	.512	.454	.533	.472	.421	.444	.397	.355	.363	.326	.293	.287	.259	.234	195
	3	.494	.418	.357	453	.384	.330	.376	.322	.277	.304	.263	.277	.238	.205	177	142
	4	429	.351	.291	394	.324	.269	.327	270	.226	.264	220	.184	.206	171	143	112
	5	.371	.296	237	.343	.272	218	.285	227	183	.230	.183	148	.178	142	[illegible]	086
	6	.329	.252	198	.301	232	181	.249	193	151	201	.155	.121	.156	119	[illegible]	067
	7	.291	.216	166	267	198	.151	220	164	.125	.177	.133	.099	.138	.102	.074	051
	8	.260	.189	139	.238	.174	128	.197	.144	.106	.160	.116	.084	123	.088	062	.041
	9	.234	.166	.119	.215	152	.109	.178	.126	.090	.144	.101	.071	.112	.077	.051	.033
	10	.211	.145	.103	.193	.135	.094	.161	.111	.077	.130	.089	.059	.101	.067	.042	.026

Standard Dome
Effective Floor Cavity Reflectance (Rfc) is 20%

%Ceiling Rcc		80			70			50			30			10			0
%Walls	Rw	50	30	10	50	30	10	50	30	10	50	30	10	50	30	10	0
Room Cavity Ratios	1	.777	.747	.720	.759	.731	.707	.726	.703	.638	.696	.678	.661	.670	.654	.640	.625
	2	.680	.632	.590	.666	.621	.584	.638	.601	.568	.613	.583	.555	.591	.565	.541	.525
	3	.593	.534	487	.582	.526	.483	.559	.512	.473	.537	.497	.464	.518	.484	.454	.438
	4	523	.459	.409	.513	.453	.405	.493	.441	.399	.475	.430	.393	.458	.419	.387	.370
	5	.459	.391	.340	.449	.386	.338	.434	.337	.335	.418	.368	.330	.403	.360	325	.309
	6	.405	.336	.289	.397	.330	.284	.382	.325	.282	.369	.317	.279	.357	.311	.275	.260
	7	.357	.290	.245	.351	.286	.241	.338	.279	.238	.325	.274	.234	.316	.269	.232	.217
	8	.321	.256	.209	.315	.253	.208	.304	.247	.207	.294	.242	.204	.284	.237	.202	.187
	9	.289	.225	.180	.284	.222	.180	.274	.218	.178	.265	.213	.177	.257	.209	.175	160
	10	.260	.198	.158	.255	.198	.157	.248	.193	.156	.240	.189	.153	.233	.186	.152	.139

Type V 8" Refractor
Effective floor Cavity Reflectance (Rfc) is 20%

%Ceiling Rcc		80			70			50			30				10		0
%Walls	Rw	50	30	10	50	30	10	50	30	10	50	30	10	50	30	10	0
Room Cavity Ratios	1	.67	62	58	64	60	.55	.59	.55	.53	54	.52	.50	51	.49	[illegible]	44
	2	.54	48	42	.52	46	.41	48	43	.38	44	.40	.36	40	.37	34	32
	3	.45	.37	.31	43	.36	.30	39	.33	27	.36	.31	.27	.33	.29	.25	23
	4	.38	.30	.24	.37	29	.24	.33	.27	.22	.31	.25	.21	.27	.23	.20	17
	5	.33	.25	.19	.31	.24	.18	.27	.22	.17	.26	.20	.16	.24	.19	.15	13
	6	.27	.21	.15	.27	.20	.15	.25	.18	.13	.22	.17	.13	.21	.16	.12	.10
	7	.25	.18	13	24	.17	.12	.22	.15	.11	.20	.13	.10	.18	.13	.10	08
	8	.22	.15	10	.21	.15	.10	.20	.13	.10	.18	.13	.09	.16	.12	.08	.06
	9	.20	.13	09	19	13	.09	.18	.12	.08	.16	.11	.08	.15	.10	.06	.05
	10	.18	.12	08	18	.12	08	.16	.11	.06	.15	.10	.06	.13	.09	.06	05

Appleton ELECTRIC COMPANY

1701 W. Wellington Ave
Chicago, Illinois 60657

Isofootcandle Data on Mercmaster HID Lighting Fixtures.

TYPE
HB, HC,
HH, HK, HJ
HL

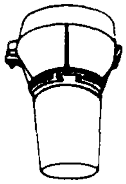

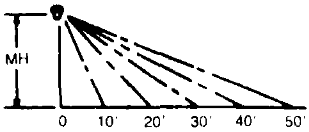

Footcandle Chart (Initial Horiz. FTC)

Mercmaster
No Reflector
No Guard
High Pressure Sodium
70 Watt—5800 Lumen
100 Watt—9500 Lumen
150 Watt—16000 Lumen

Lamp	Mounting Height, Ft.	Horizontal Distance from Mounting Point (Ft.) 0	5	10	15	20	25	30	35	40	45	50
70 Watt HPS	8	.60	2.7	1.5	.73	.38	.21	.13	.08	.06	.04	.03
	10	.39	1.7	1.3	.72	.40	.24	.15	.10	.07	.05	.04
	12	.27	1.1	1.1	.68	.41	.26	.17	.11	.08	.06	.04
	15	.17	.66	.81	.60	.39	.26	.18	.13	.09	.07	.05
	20	.10	.37	.43	.40	.33	.25	.18	.13	.10	.08	.06
100 Watt HPS	8	1.0	4.8	2.7	1.2	.62	.35	.21	.14	.10	.07	.05
	10	.64	2.8	2.2	1.3	.67	.40	.25	.16	.11	.08	.06
	12	.44	1.8	1.8	1.3	.71	.42	.28	.18	.13	.09	.07
	15	.28	1.1	1.3	.97	.70	.45	.30	.21	.15	.11	.08
	20	.16	.59	.69	.70	.55	.42	.32	.23	.17	.13	.10
150 Watt HPS	8	2.5	8.3	4.6	2.2	1.1	.62	.38	.25	.17	.12	.09
	10	1.6	5.4	4.0	2.2	1.2	.71	.44	.29	.20	.14	.11
	12	1.1	4.2	3.3	2.0	1.2	.76	.49	.33	.23	.17	.12
	15	.72	2.1	2.4	1.8	1.2	.79	.54	.38	.27	.20	.15
	20	.40	1.1	1.3	1.3	1.0	.73	.54	.40	.30	.23	.18

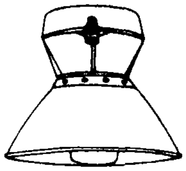

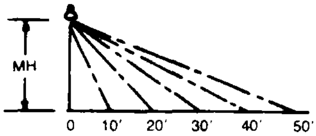

Footcandle Chart (Initial Horiz. FTC)

Mercmaster
Standard Reflector
No Guard
High Pressure Sodium
70 Watt-5800 Lumen
100 Watt-9500 Lumen
150 Watt-16000 Lumen

Lamp	Mounting Height, Ft.	Horizontal Distance from Mounting Point (Ft.) 0	5	10	15	20	25	30	35	40	45	50
70 Watt HPS	8	14.8	10.0	3.8	1.5	.55	.15	.05	.03	.02	.01	.01
	10	9.5	7.7	3.7	1.6	.74	.32	.12	.05	.03	.02	.01
	12	6.6	6.6	3.3	1.5	.87	.46	.18	.10	.05	.02	.02
	15	4.2	4.2	2.7	1.7	.94	.56	.33	.18	.10	.06	.03
	20	2.4	2.5	1.9	1.3	.92	62	.41	.28	.18	12	.08
100 Watt HPS	8	21.9	16.8	6.3	2.4	.86	.28	.08	.05	.03	.02	.01
	10	14.0	12.4	6.0	2.7	1.2	.53	.19	.07	.04	.03	.02
	12	9.7	9.4	5.5	2.8	1.4	.73	.36	.20	.13	.04	.03
	15	6.2	6.7	4.4	2.7	1.6	.90	.53	.33	.19	.11	.05
	20	3.5	4.3	3.1	2.2	1.5	1.0	.68	.44	.30	.21	.13
150 Watt HPS	8	36.9	27.8	10.5	3.8	1.3	.35	.14	.08	.04	.03	.02
	10	23.6	20.8	10.1	4.4	2.0	.78	.29	.11	.07	.04	.03
	12	16.4	15.8	9.2	4.6	2.2	1.2	.54	.30	.16	.06	.04
	15	10.5	11.6	7.5	4.5	2.6	1.5	.86	.42	.26	.16	.08
	20	5.9	7.2	5.2	3.7	2.5	1.7	1.1	.73	.50	.32	.19

Appleton® ELECTRIC COMPANY

1701 W. Wellington Ave.
Chicago, Illinois 60657

Mercmaster Dimensions: 50W-150W HPS, 175W-250W MH, and 100W-250W MV.

TYPE
HB, HC,
HH, HK, HJ
HL

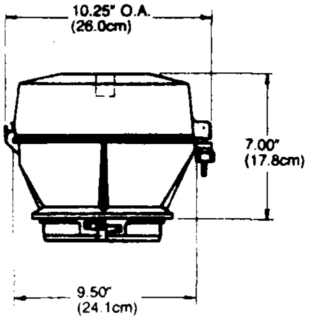

Pendant Mount

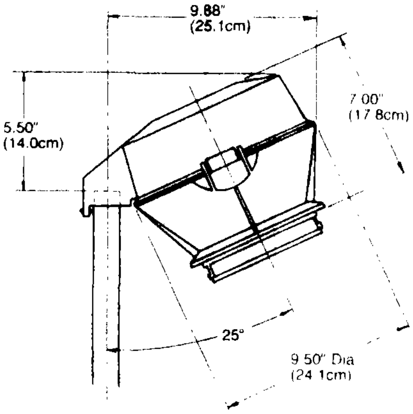

Stanchion Mount

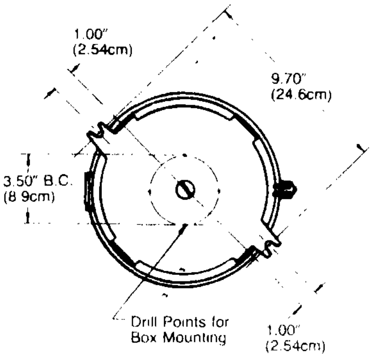

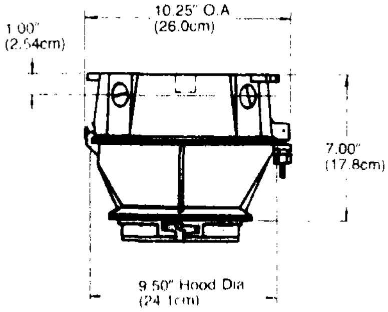

Ceiling Mount

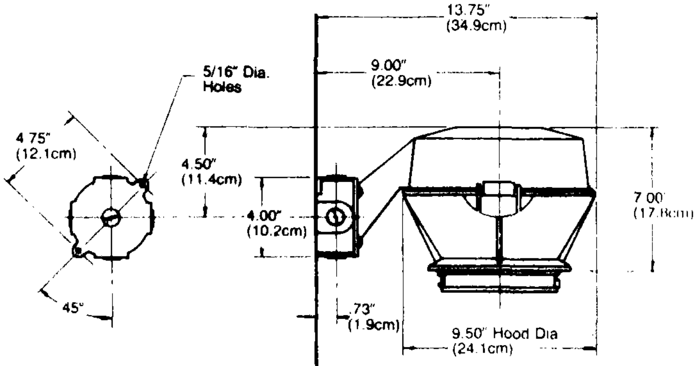

Wall Mount

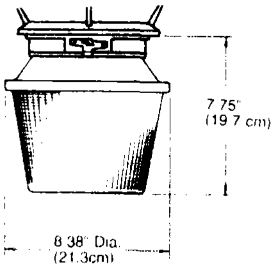

Fixture with 8" Refractor

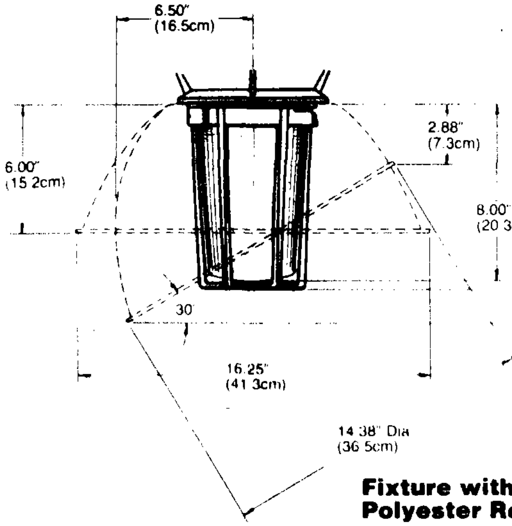

Fixture with Guard and Polyester Reflector

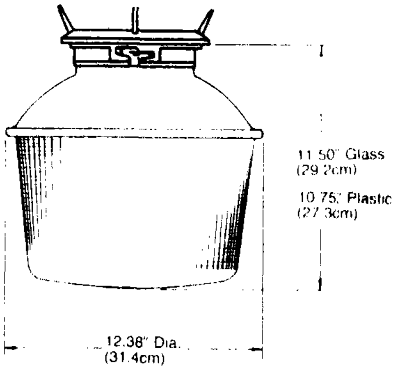

Fixture with 12" Refractor

Appleton® ELECTRIC COMPANY

1701 W. Wellington Ave.
Chicago, Illinois 60657

F1-8

WITH PHOTOCELL

Class I, Div. 2,
Groups A,B,C,D†
Class II, Div. 1 and 2,
Groups E,F,G‡
Class III.

UL 57, UL 844 Listed

Mercmaster Enclosed and Gasketed Fixtures: High Pressure Sodium—50W, 70W, 100W and 150W.

High Power Factor (Min. P.F. 90%). Suitable for Use in Wet Locations.
Prismatic Glass Globe or Type V Closed Glass Refractor.

TYPE
HB
#LPWB1075-MT

277V


With Globe, Less Guard


With Refractor (NEMA V)


With Globe. Less Guard


With Refractor (NEMA V)


With Globe, Less Guard


With Refractor (NEMA V)


With Globe, Less Guard

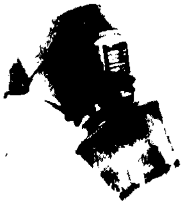
With Refractor (NEMA V)

Type Mounting	Lamp Watts	Hub Size (Inches)	Catalog Number With Globe**	Catalog Number With 8" Refractor	Catalog Number With 12" Refractor
Pendant One Hub, Rigid or Flexible Mounting	50	3/4	LPAL5075◇	LPAL5075J◇	LPAL5075R◇
		1	LPAL5010◇	LPAL5010J◇	LPAL5010R◇
	70	3/4	LPAL7075*	LPAL7075J*	LPAL7075R*
		1	LPAL7010*	LPAL7010J*	LPAL7010R*
	100	3/4	LPAL1075*	LPAL1075J*	LPAL1075R*
		1	LPAL1010*	LPAL1010J*	LPAL1010R*
	150‡	3/4	LPAL1575*	LPAL1575J*	LPAL1575R*
		1	LPAL1510*	LPAL1510J*	LPAL1510R*
Ceiling Five Hubs, Four Close-Up Plugs	50	3/4	LPCL5075◇	LPCL5075J◇	LPCL5075R◇
		1	LPCL5010◇	LPCL5010J◇	LPCL5010R◇
	70	3/4	LPCL7075*	LPCL7075J*	LPCL7075R*
		1	LPCL7010*	LPCL7010J*	LPCL7010R*
	100	3/4	LPCL1075*	LPCL1075J*	LPCL1075R*
		1	LPCL1010*	LPCL1010J*	LPCL1010R*
	150‡	3/4	LPCL1575*	LPCL1575J*	LPCL1575R*
		1	LPCL1510*	LPCL1510J*	LPCL1510R*
Wall Mount Five Hubs, Four Close-Up Plugs	50	3/4	LPWBL5075◇	LPWBL5075J◇	LPWBL5075R◇
		1	LPWBL5010◇	LPWBL5010J◇	LPWBL5010R◇
	70	3/4	LPWBL7075*	LPWBL7075J*	LPWBL7075R*
		1	LPWBL7010*	LPWBL7010J*	LPWBL7010R*
	100	3/4	LPWBL1075*	LPWBL1075J*	LPWBL1075R*
		1	LPWBL1010*	LPWBL1010J*	LPWBL1010R*
	150‡	3/4	LPWBL1575*	LPWBL1575J*	LPWBL1575R*
		1	LPWBL1510*	LPWBL1510J*	LPWBL1510R*
25° Stanchion One Hub	50	1-1/4	LPSL50125◇	LPSL50125J◇	LPSL50125R◇
		1-1/2	LPSL50150◇	LPSL50150J◇	LPSL50150R◇
	70	1-1/4	LPSL70125*	LPSL70125J*	LPSL70125R*
		1-1/2	LPSL70150*	LPSL70150J*	LPSL70150R*
	100	1-1/4	LPSL10125*	LPSL10125J*	LPSL10125R*
		1-1/2	LPSL10150*	LPSL10150J*	LPSL10150R*
	150‡	1-1/4	LPSL15125*	LPSL15125J*	LPSL15125R*
		1-1/2	LPSL15150*	LPSL15150J*	LPSL15150R*

---

*Add voltage suffix -MT for 120, 208, 240 or 277V; -480 for 480V. ◇50W fixtures have dual tap ballast for 120 and 277V only; add suffix -DT **To order fixture with guard, add suffix G (before adding voltage suffix). †For specific classified area suitability of each fixture listed, see pages 6 and 7. ‡For Groups E,F, and G use 8" or 12" refractor only. Heat-resistant glass globe supplied with 150W fixture.

Discount Schedule UD
Refer to Pricing Index for price, weight, and standard package

Appleton® Electric Company

1701 W. Wellington Ave.
Chicago, Illinois 60657

Class I, Div. 2,
Groups A,B,C,D†
Class II, Div. 1 and 2,
Groups E,F,G‡
Class III.

UL 57, UL 844 Listed

TYPE
HC
#LPSL10125G MT

WITH PHOTOCELL

Mercmaster Enclosed and Gasketed Fixtures: High Pressure Sodium— 50W, 70W, 100W and 150W.

High Power Factor (Min. P.F. 90%). Suitable for Use in Wet Locations.
Prismatic Glass Globe or Type V Closed Glass Refractor.

277V

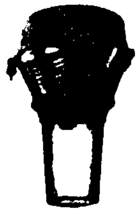
With Globe, Less Guard


With Refractor (NEMA V)


With Globe, Less Guard


With Refractor (NEMA V)


With Globe, Less Guard


With Refractor (NEMA V)

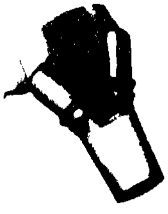
With Globe, Less Guard


With Refractor (NEMA V)

Type Mounting	Lamp Watts	Hub Size (Inches)	With Globe**	Catalog Number With 8" Refractor	With 12" Refractor
Pendant One Hub, Rigid or Flexible Mounting	50	3/4	LPAL5075◇	LPAL5075J◇	LPAL5075R◇
		1	LPAL5010◇	LPAL5010J◇	LPAL5010R◇
	70	3/4	LPAL7075*	LPAL7075J*	LPAL7075R*
		1	LPAL7010*	LPAL7010J*	LPAL7010R*
	100	3/4	LPAL1075*	LPAL1075J*	LPAL1075R*
		1	LPAL1010*	LPAL1010J*	LPAL1010R*
	150‡	3/4	LPAL1575*	LPAL1575J*	LPAL1575R*
		1	LPAL1510*	LPAL1510J*	LPAL1510R*
Ceiling Five Hubs, Four Close-Up Plugs	50	3/4	LPCL5075◇	LPCL5075J◇	LPCL5075R
		1	LPCL5010◇	LPCL5010J◇	LPCL5010R◇
	70	3/4	LPCL7075*	LPCL7075J*	LPCL7075R*
		1	LPCL7010*	LPCL7010J*	LPCL7010R*
	100	3/4	LPCL1075*	LPCL1075J*	LPCL1075R*
		1	LPCL1010*	LPCL1010J*	LPCL1010R*
	150‡	3/4	LPCL1575*	LPCL1575J*	LPCL1575R*
		1	LPCL1510*	LPCL1510J*	LPCL1510R*
Wall Mount Five Hubs, Four Close-Up Plugs	50	3/4	LPWBL5075	LPWBL5075J◇	LPWBL5075R
		1	LPWBL5010◇	LPWBL5010J◇	LPWBL5010R
	70	3/4	LPWBL7075*	LPWBL7075J*	LPWBL7075R*
		1	LPWBL7010*	LPWBL7010J*	LPWBL7010R*
	100	3/4	LPWBL1075*	LPWBL1075J*	LPWBL1075R*
		1	LPWBL1010*	LPWBL1010J*	LPWBL1010R*
	150‡	3/4	LPWBL1575*	LPWBL1575J*	LPWBL1575R*
		1	LPWBL1510*	LPWBL1510J*	LPWBL1510R*
25° Stanchion One Hub	50	1-1/4	LPSL50125	LPSL50125J	LPSL50125R
		1-1/2	LPSL50150	LPSL50150J◇	LPSL50150R◇
	70	1-1/4	LPSL70125*	LPSL70125J*	LPSL70125R*
		1-1/2	LPSL70150*	LPSL70150J*	LPSL70150R*
	100	1-1/4	LPSL10125*	LPSL10125J*	LPSL10125R*
		1-1/2	LPSL10150*	LPSL10150J*	LPSL10150R*
	150‡	1-1/4	LPSL15125*	LPSL15125J*	LPSL15125R*
		1-1/2	LPSL15150*	LPSL15150J*	LPSL15150R*

---

*Add voltage suffix -MT for 120, 208, 240 or 277V; -480 for 480V. ◇50W fixtures have dual tap ballast for 120 and 277V only; add suffix DT. To order fixture with guard, add suffix G (before adding voltage suffix). †For specific classified area suitability of each fixture listed, see pages 6 and 7. ‡For Groups E,F, and G use 8" or 12" refractor only. Heat-resistant glass globe supplied with 150W fixture.

Discount Schedule UD
Refer to Pricing Index for price,
weight, and standard package

Appleton® ELECTRIC COMPANY

1701 W. Wellington Ave.
Chicago, Illinois 60657

Class I, Div. 2,
Groups A,B,C,D†
Class II, Div. 1 and 2,
Groups E,F,G‡
Class III.

UL 57, UL 844 Listed

TYPE
HH, HK
#LPCL 1075G-MT → LPCL1075G-MT
w/ LPR-255T

Mercmaster Enclosed and Gasketed Fixtures: High Pressure Sodium—50W, 70W, 100W and 150W.

High Power Factor (Min. P.F. 90%). Suitable for Use in Wet Locations.
Prismatic Glass Globe or Type V Closed Glass Refractor.


With Globe, Less Guard


With Refractor (NEMA V)


With Globe. Less Guard


With Refractor (NEMA V)


With Globe, Less Guard


With Refractor (NEMA V)


With Globe, Less Guard


With Refractor (NEMA V)

Type Mounting	Lamp Watts	Hub Size (Inches)	With Globe**	Catalog Number With 8" Refractor	With 12" Refractor
Pendant One Hub, Rigid or Flexible Mounting	50	3/4	LPAL5075◇	LPAL5075J◇	LPAL5075R◇
		1	LPAL5010◇	LPAL5010J◇	LPAL5010R◇
	70	3/4	LPAL7075*	LPAL7075J*	LPAL7075R*
		1	LPAL7010*	LPAL7010J*	LPAL7010R*
HK ⟶	100	3/4	LPAL1075*	LPAL1075J*	LPAL1075R*
		1	LPAL1010*	LPAL1010J*	LPAL1010R*
	150‡	3/4	LPAL1575*	LPAL1575J*	LPAL1575R*
		1	LPAL1510*	LPAL1510J*	LPAL1510R*
Ceiling Five Hubs, Four Close-Up Plugs	50	3/4	LPCL5075◇	LPCL5075J	LPCL5075R◇
		1	LPCL5010◇	LPCL5010J◇	LPCL5010R◇
	70	3/4	LPCL7075*	LPCL7075J*	LPCL7075R*
		1	LPCL7010*	LPCL7010J*	LPCL7010R*
HH ⟶	100	3/4	LPCL1075*	LPCL1075J*	LPCL1075R*
		1	LPCL1010*	LPCL1010J*	LPCL1010R*
	150‡	3/4	LPCL1575*	LPCL1575J*	LPCL1575R*
		1	LPCL1510*	LPCL1510J*	LPCL1510R*
Wall Mount Five Hubs, Four Close-Up Plugs	50	3/4	LPWBL5075◇	LPWBL5075J◇	LPWBL5075R
		1	LPWBL5010◇	LPWBL5010J◇	LPWBL5010R◇
	70	3/4	LPWBL7075*	LPWBL7075J*	LPWBL7075R*
		1	LPWBL7010*	LPWBL7010J*	LPWBL7010R*
	100	3/4	LPWBL1075*	LPWBL1075J*	LPWBL1075R*
		1	LPWBL1010*	LPWBL1010J*	LPWBL1010R*
	150‡	3/4	LPWBL1575*	LPWBL1575J*	LPWBL1575R*
		1	LPWBL1510*	LPWBL1510J*	LPWBL1510R*
25° Stanchion One Hub	50	1-1/4	LPSL50125◇	LPSL50125J◇	LPSL50125R◇
		1-1/2	LPSL50150◇	LPSL50150J◇	LPSL50150R◇
	70	1-1/4	LPSL70125*	LPSL70125J*	LPSL70125R*
		1-1/2	LPSL70150*	LPSL70150J*	LPSL70150R*
	100	1-1/4	LPSL10125*	LPSL10125J*	LPSL10125R*
		1-1/2	LPSL10150*	LPSL10150J*	LPSL10150R*
	150‡	1-1/4	LPSL15125*	LPSL15125J*	LPSL15125R*
		1-1/2	LPSL15150*	LPSL15150J*	LPSL15150R*

*Add voltage suffix -MT for 120, 208, 240 or 277V; -480 for 480V. ◇50W fixtures have dual tap ballast for 120 and 277V only; add suffix -DT. **To order fixture with guard, add suffix G (before adding voltage suffix) †For specific classified area suitability of each fixture listed, see pages 6 and 7. ‡For Groups E,F, and G use 8" or 12" refractor only. Heat-resistant glass globe supplied with 150W fixture

Discount Schedule UD
Refer to Pricing Index for price, weight, and standard package

Appleton ELECTRIC COMPANY
1701 W. Wellington Ave.
Chicago, Illinois 60657

Reflectors, Refractors and Guards for Mercmaster HID Lighting Fixtures.

Screws Furnished to Fasten Reflectors to Ballast Body.
Refractors and Reflector/Lens Thread Directly into Ballast Body.

Porcelain Steel and Polyester Reflectors—50W-250W*

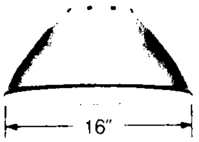

Porcelain Standard Dome

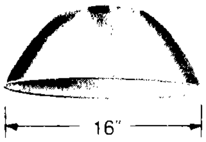

Polyester Standard Dome

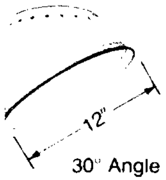

30° Angle Porcelain

30° Angle Polyester

Description	Catalog Number Porcelain	Catalog Number Polyester
Standard Dome	LPR-25ST	LPRP-25ST
30° Angle	LPR-25AN	LPRP-25AN

Closed Prismatic Refractors—50W-250W*

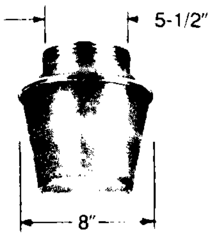

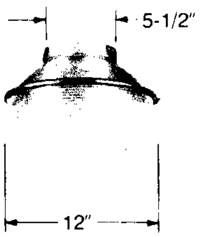

Description	8" Glass (50-250W*)	12" Glass (50-250W*)	12" Poly-carbonate (50-150W‡)
NEMA II	LPJF-2CG	LPRF-2CG	LPRF-2CP
NEMA III			LPRF-3CP
NEMA IV			LPRF-4CP
NEMA V	LPJF-5CG	LPRF-5CG	LPRF-5CP

Closed Prismatic Glass Refractor and Reflector/Lens—250W-400W†

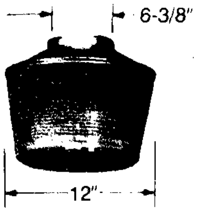

Glass 12" Refractor

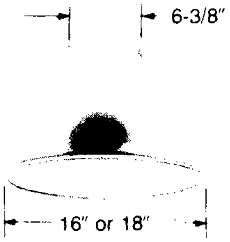

Heat and Impact Resistant Reflector/Lens

Description	Catalog Number
NEMA V Glass 12" Refractor	LPRF-4025
16" Reflector/Lens	LPRM-4025
18" Reflector/Lens	DTRM-4025

Steel Guards for 8" and 12" Refractors

LPBG-8

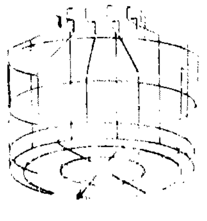

LPBG-12

Description	8" Guard (50-250W*)	12" Guard (50-250W*)
Fit Glass and Polycarbonate Refractors Above	LPBG-8	LPBG-12

---

*Max. 150W HPS. †250W-400W HPS and 400W MV and MH. ‡100W Max. for MH and MV.

Discount Schedule UD
Refer to Pricing Index for price, weight, and standard package

Appleton® Electric Company

1701 W. Wellington Ave.
Chicago, Illinois 60657

Class I, Div. 2,
Groups A,B,C,D†
Class II, Div. 1 and 2,
Groups E,F,G‡
Class III.

UL 57, UL 844 Listed

TYPE
HD, HJ
#LPWBL1075 G-MT

Mercmaster Enclosed and Gasketed Fixtures: High Pressure Sodium— 50W, 70W, 100W and 150W.

High Power Factor (Min. P.F. 90%). Suitable for Use in Wet Locations.
Prismatic Glass Globe or Type V Closed Glass Refractor.

HD = 170
HJ = 277


With Globe, Less Guard


With Refractor (NEMA V)


With Globe, Less Guard


With Refractor (NEMA V)


With Globe, Less Guard


With Refractor (NEMA V)

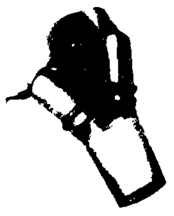
With Globe, Less Guard


With Refractor (NEMA V)

Type Mounting	Lamp Watts	Hub Size (Inches)	With Globe**	Catalog Number With 8" Refractor	With 12" Refractor
Pendant One Hub, Rigid or Flexible Mounting	50	3/4	LPAL5075◇	LPAL5075J◇	LPAL5075R◇
		1	LPAL5010◇	LPAL5010J◇	LPAL5010R◇
	70	3/4	LPAL7075*	LPAL7075J*	LPAL7075R*
		1	LPAL7010*	LPAL7010J*	LPAL7010R*
	100	3/4	LPAL1075*	LPAL1075J*	LPAL1075R*
		1	LPAL1010*	LPAL1010J*	LPAL1010R*
	150‡	3/4	LPAL1575*	LPAL1575J*	LPAL1575R*
		1	LPAL1510*	LPAL1510J*	LPAL1510R*
Ceiling Five Hubs, Four Close-Up Plugs	50	3/4	LPCL5075	LPCL5075J	LPCL5075R
		1	LPCL5010	LPCL5010J	LPCL5010R
	70	3/4	LPCL7075*	LPCL7075J*	LPCL7075R*
		1	LPCL7010*	LPCL7010J*	LPCL7010R*
	100	3/4	LPCL1075*	LPCL1075J*	LPCL1075R*
		1	LPCL1010*	LPCL1010J*	LPCL1010R*
	150‡	3/4	LPCL1575*	LPCL1575J*	LPCL1575R*
		1	LPCL1510*	LPCL1510J*	LPCL1510R*
Wall Mount Five Hubs, Four Close-Up Plugs	50	3/4	LPWBL5075◇	LPWBL5075J◇	LPWBL5075R◇
		1	LPWBL5010◇	LPWBL5010J◇	LPWBL5010R◇
	70	3/4	LPWBL7075*	LPWBL7075J*	LPWBL7075R*
		1	LPWBL7010*	LPWBL7010J*	LPWBL7010R*
	100	3/4	LPWBL1075*	LPWBL1075J*	LPWBL1075R*
		1	LPWBL1010*	LPWBL1010J*	LPWBL1010R*
	150‡	3/4	LPWBL1575*	LPWBL1575J*	LPWBL1575R*
		1	LPWBL1510*	LPWBL1510J*	LPWBL1510R*
25° Stanchion One Hub	50	1-1/4	LPSL50125◇	LPSL50125J◇	LPSL50125R◇
		1-1/2	LPSL50150◇	LPSL50150J◇	LPSL50150R◇
	70	1-1/4	LPSL70125*	LPSL70125J*	LPSL70125R*
		1-1/2	LPSL70150*	LPSL70150J*	LPSL70150R*
	100	1-1/4	LPSL10125*	LPSL10125J*	LPSL10125R*
		1-1/2	LPSL10150*	LPSL10150J*	LPSL10150R*
	150‡	1-1/4	LPSL15125*	LPSL15125J*	LPSL15125R*
		1-1/2	LPSL15150*	LPSL15150J*	LPSL15150R*

---

*Add voltage suffix -MT for 120, 208, 240 or 277V; -480 for 480V. ◇50W fixtures have dual tap ballast for 120 and 277V only; add suffix QT [illegible]o order fixture with guard, add suffix G (before adding voltage suffix). †For specific classified area suitability of each fixture listed, see pages 6 and 7. ‡For Groups E,F, and G use 8" or 12" refractor only. Heat-resistant glass globe supplied with 150W fixture.

Discount Schedule UD
Refer to Pricing Index for price, weight, and standard package

Appleton® ELECTRIC COMPANY

1701 W. Wellington Ave.
Chicago, Illinois 60657

Class I, Div. 2,
Groups A,B,C,D†
Class II, Div. 1 and 2,
Groups E,F,G‡
Class III.

UL ~~57, UL 844 Listed~~

TYPE

HL

#LPSL-10125G-MT

Mercmaster Enclosed and Gasketed Fixtures: High Pressure Sodium— 50W, 70W, 100W and 150W.

High Power Factor (Min. P.F. 90%). Suitable for Use in Wet Locations.
Prismatic Glass Globe or Type V Closed Glass Refractor.


With Globe, Less Guard


With Refractor (NEMA V)


With Globe, Less Guard


With Refractor (NEMA V)


With Globe, Less Guard


With Refractor (NEMA V)


With Globe, Less Guard


With Refractor (NEMA V)

Type Mounting	Lamp Watts	Hub Size (Inches)	With Globe**	Catalog Number With 8" Refractor	With 12" Refractor
Pendant One Hub, Rigid or Flexible Mounting	50	3/4	LPAL5075◇	LPAL5075J◇	LPAL5075R◇
		1	LPAL5010◇	LPAL5010J◇	LPAL5010R◇
	70	3/4	LPAL7075*	LPAL7075J*	LPAL7075R*
		1	LPAL7010*	LPAL7010J*	LPAL7010R*
	100	3/4	LPAL1075*	LPAL1075J*	LPAL1075R*
		1	LPAL1010*	LPAL1010J*	LPAL1010R*
	150‡	3/4	LPAL1575*	LPAL1575J*	LPAL1575R*
		1	LPAL1510*	LPAL1510J*	LPAL1510R*
Ceiling Five Hubs, Four Close-Up Plugs	50	3/4	LPCL5075◇	LPCL5075J	LPCL5075R
		1	LPCL5010◇	LPCL5010J◇	LPCL5010R
	70	3/4	LPCL7075*	LPCL7075J*	LPCL7075R*
		1	LPCL7010*	LPCL7010J*	LPCL7010R*
	100	3/4	LPCL1075*	LPCL1075J*	LPCL1075R*
		1	LPCL1010*	LPCL1010J*	LPCL1010R*
	150‡	3/4	LPCL1575*	LPCL1575J*	LPCL1575R*
		1	LPCL1510*	LPCL1510J*	LPCL1510R*
Wall Mount Five Hubs, Four Close-Up Plugs	50	3/4	LPWBL5075◇	LPWBL5075J◇	LPWBL5075R◇
		1	LPWBL5010◇	LPWBL5010J◇	LPWBL5010R◇
	70	3/4	LPWBL7075*	LPWBL7075J*	LPWBL7075R*
		1	LPWBL7010*	LPWBL7010J*	LPWBL7010R*
	100	3/4	LPWBL1075*	LPWBL1075J*	LPWBL1075R*
		1	LPWBL1010*	LPWBL1010J*	LPWBL1010R*
	150‡	3/4	LPWBL1575*	LPWBL1575J*	LPWBL1575R*
		1	LPWBL1510*	LPWBL1510J*	LPWBL1510R*
25° Stanchion One Hub	50	1-1/4	LPSL50125◇	LPSL50125J◇	LPSL50125R◇
		1-1/2	LPSL50150◇	LPSL50150J◇	LPSL50150R◇
	70	1-1/4	LPSL70125*	LPSL70125J*	LPSL70125R*
		1-1/2	LPSL70150*	LPSL70150J*	LPSL70150R*
	100	1-1/4	LPSL10125*	LPSL10125J*	LPSL10125R*
		1-1/2	LPSL10150*	LPSL10150J*	LPSL10150R*
	150‡	1-1/4	LPSL15125*	LPSL15125J*	LPSL15125R*
		1-1/2	LPSL15150*	LPSL15150J*	LPSL15150R*

---

*Add voltage suffix -MT for 120, 208, 240 or 277V; -480 for 480V. ◇50W fixtures have dual tap ballast for 120 and 277V only; add suffix [illegible] **To order fixture with guard, add suffix G (before adding voltage suffix). †For specific classified area suitability of each fixture listed, see pages 6 and 7. ‡For Groups E,F, and G use 8" or 12" refractor only. Heat-resistant glass globe supplied with 150W fixture.

Discount Schedule UD
Refer to Pricing Index for price, weight, and standard package

Appleton ELECTRIC COMPANY
1701 W. Wellington Ave
Chicago, Illinois 60657

RAL

277V

ROADWAY/AREA LUMINAIRE

TYPE	SUPERCEDES SPEC'D. NUMBER
HG	2 FIXTURES *RAL-4LEC7-SDE-PC
HM	1 FIXTURE " " " "

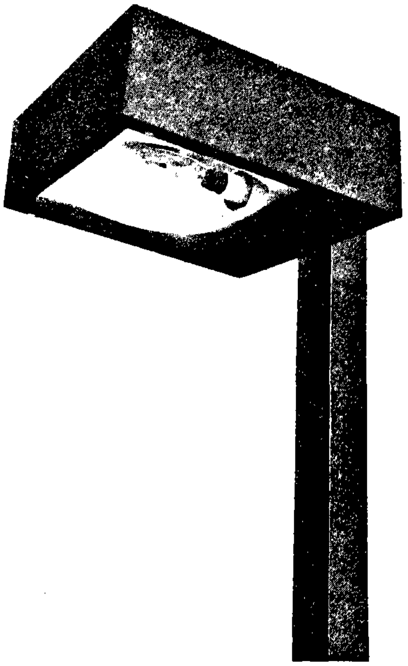

SUGGESTED RAL LUMINAIRE SPECIFICATIONS

GENERAL

Luminaire shall be Crouse-Hinds Company series RAL, catalog number ________ for use with ________ watt ________ lamp.

MECHANICAL

The maximum weight shall not exceed ________ pounds and its maximum effective projected area (EPA) shall not exceed 2.08 square feet.

The housing, door and lampholder housing shall be die cast aluminum.

The main housing shall be provided with integral gussets for wall strength, integral bosses for ballast assembly and reflector mounting, and with integrally cast lugs for the door hinge pins.

The door shall be provided with integrally cast hinge pins, ribs and bosses to retain the combination optical system and lens gasket. The gasket shall be extruded silicone rubber. Plated steel lens retaining strips shall be provided to retain the lens and also the die cast door latches having integrally cast pivot pins. Coil springs shall be used to provide tension on the door latches. It shall be possible to open the door without the use of tools. The door shall be provided with a tempered, impact resistant glass lens.

A hinged and readily removable ballast assembly complete with carrying handle shall be provided to simplify pole top and/or bench top maintenance. The ballast assembly shall swing down to leave both hands free for maintenance. The removal of the ballast assembly shall be accomplished without removal of the lamp. The hinged portion of the ballast assembly shall have a handle to facilitate carrying the assembly.

The standard unit shall be U.L. listed (and carry a U.L. table) suitable for outdoor wet location application.

OPTICAL

The reflector shall be of one piece alzaked aluminum, with the flange designed to accept the combination gasket, and to tightly seal the optical system. The reflector flange shall be provided with reinforced slots to accept the two door latches. The lampholder housing shall be riveted to the reflector, gasketed to maintain the optical system seal. The lampholder housing shall be provided with 3 integrally cast sets of bosses for pre-setting the lampholder position, depending upon the lamp used.

FINISH

Luminaire will have a dark bronze thermoset acrylic enamel finish.

ORDERING INSTRUCTIONS

Many combinations of RAL luminaires can be made from a wide variety of components. A typical combination would be:

RAL-400LEC-120-SD-AF-PC

This combination is detailed in the following breakdown of components. Other combinations are made by substituting or adding from the tables.

MODEL		LAMP TYPE WATTAGE		BALLAST* VOLTAGE		MOUNTING SYSTEM		OPTIONS (ALL SUFFIXES)
RAL	—	**400 LEC**	—	**120**	—	**SD**	—	**AF-PC**

LAMP WATTAGE AND TYPE

ORDERING DESIGNATION	LAMP AND BALLAST TYPE	APPROXIMATE NET WT. (LBS.)	EFFECTIVE PROJECTED AREA (SQ. FT.)**	DIMENSIONS
70LHR △	70W High Pressure Sodium	43		
100LHR △	100W High Pressure Sodium	43		
150LHR △	150W High Pressure Sodium	45		
200LEC	200W High Pressure Sodium	50		
250LEC	250W High Pressure Sodium	50	Side	8⅝" deep x
310LEC	310W High Pressure Sodium	56	2.08	18¹¹⁄₁₆" wide x
400LEC	400W High Pressure Sodium	58		25³⁄₁₆" long
175MHP-SM‡	175W Metal Halide	44		
250MHP	250W Metal Halide	46		
400MHP	400W Metal Halide	50		
400MHP-SM‡	400W Metal Halide	50		
175HCW	175W Mercury Vapor	44		
250HCW	250W Mercury Vapor	46		
400HCW	400W Mercury Vapor	50		

Ballasts are high power factor, regulated output — except as noted.

△Unit supplied with high power factor, high reactance ballast for 55V lamp only.

‡Suitable for MS/HOR or MS-C HOR lamps.

**Add 0.55 sq. ft. effective projected area for extended arm when used.

*Specify voltage desired (120, 208, 240, 277 or 480).

OPTIONS (add as suffix to catalog number)

These options, when ordered, become an integral part of the unit.

II	Optical system provides Type II cutoff light distribution instead of the Standard Type III.
PC	Photoelectric control receptacle.
AF	Four-stage air filter. Prevents entrance of dust particles .00025mm and larger. Prevents entrance of ferro-magnetic particles and noxious atmospheric contaminants. Restricts the entry of up to 40 grains of water vapor per cycle. Life is 15,000 cycles or more.
SF	Single fuse, internally mounted, for one line wire (120 or 277V).
DF	Double fuse, internally mounted, for both line wires, (208, 240 or 480V).
VS	External, auxiliary, vandal shield, 1/8" thick polycarbonate.
MT	Multi-tap ballast (120, 208, 240, 277V) — Specify voltage to be wired. If no voltage is specified, unit will be wired for 277V.

ACCESSORIES (ALL UNITS) (order separately)

Accessories are shipped as separate items for field installation.

ML2590	Photoelectric control, 105-285 volt.
ML3887	Photoelectric control, 480 volt.
ML5121	Timing adapter. When used with photoelectric control will automatically turn off light 3-7 hours after turn on. Specify voltage (120, 240, or 277 only) and turn off period (3, 4, 5, 6, or 7 hours).

MOUNTING SYSTEMS

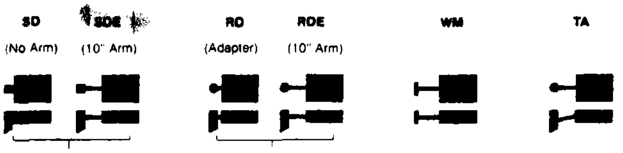

MOUNTS TO:
Square non-tapered aluminum poles
Square non-tapered steel poles
Square tapered steel poles

MOUNTS TO:
Round non-tapered aluminum poles
Round tapered aluminum poles

Wall mounting bracket — mounts over 4 inch square or round electrical box. Includes 10" arm.

Tenon adapter. Slips 2-inch horizontal tenon for retrofit on existing arms. Non-adjustable.

NOTE: Order poles separately.
Order desired mounting system with each luminaire as part of catalog number.

DIMENSIONS

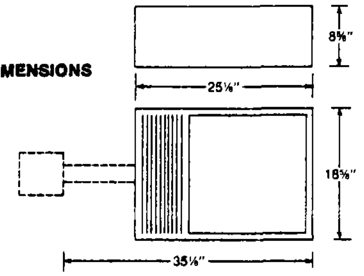

Imperial SERIES SQS

SQUARE STEEL POLES

TYPE
Pole ONLY
HG
HM

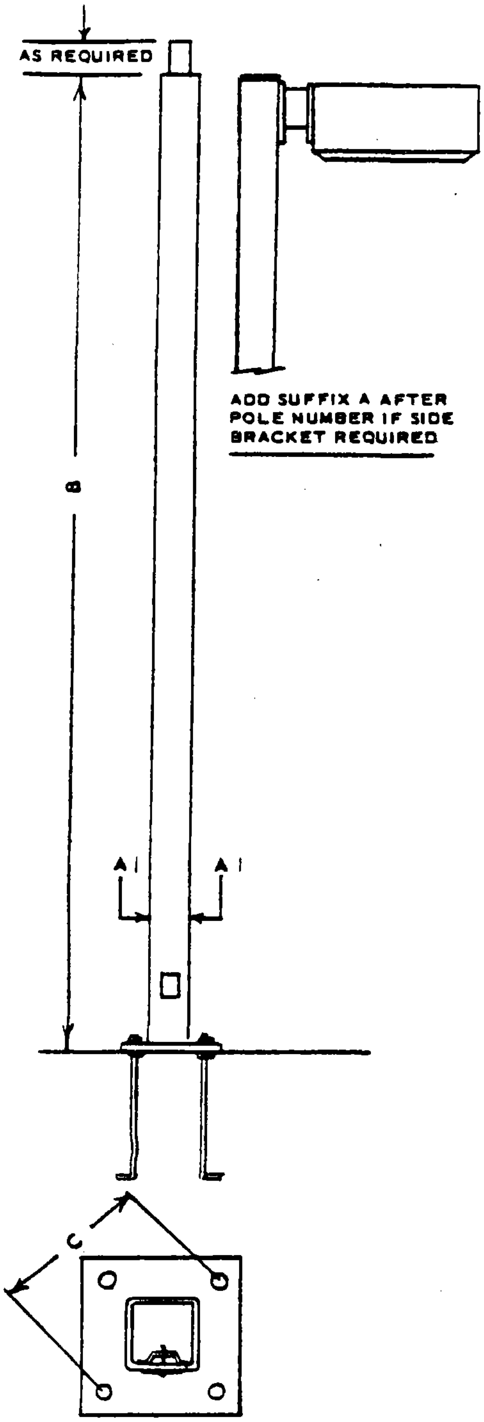

ADD SUFFIX A AFTER POLE NUMBER IF SIDE BRACKET REQUIRED

POLE NUMBER	A SHAFT	B HEIGHT	GAUGE	C B-CIRCLE	ANCHOR BOLTS	SHIPPING WEIGHT
SQS-411-8	4" SQ.	8'	11 GA.	8"	3/4X24X3	76 LBS.
SQS-411-10	4" SQ.	10'	11 GA.	8"	3/4X24X3	89 LBS.
SQS-411-12	4" SQ.	12'	11 GA.	8"	3/4X24X3	102 LBS.
SQS-411-14	4" SQ.	14'	11 GA.	8"	3/4X24X3	114 LBS.
SQS-411-16	4" SQ.	16'	11 GA.	8"	3/4X24X3	127 LBS.
SQS-411-18	4" SQ.	18'	11 GA.	8"	3/4X24X3	139 LBS.
SQS-411-20	4" SQ.	20'	11 GA.	8"	3/4X24X3	152 LBS.
SQS-47-20	4" SQ.	20'	7 GA.	8"	3/4X36X4	219 LBS.
SQS-47-25	4" SQ.	25'	7 GA.	8"	3/4X36X4	265 LBS.
SQS-57-20	5" SQ.	20'	7 GA.	11"	1X36X4	317 LBS.
SQS-57-25	5" SQ.	25'	7 GA.	11"	1X36X4	376 LBS.
SQS-57-30	5" SQ.	30'	7 GA.	11"	1X36X4	435 LBS.
SQS-57-35	5" SQ.	35'	7 GA.	11"	1X36X4	494 LBS.
SQS-67-20	6" SQ.	20'	7 GA.	11"	1X36X4	363 LBS.
SQS-67-25	6" SQ.	25'	7 GA.	11"	1X36X4	435 LBS.
SQS-67-30	6" SQ.	30'	7 GA.	11"	1X36X4	507 LBS.
SQS-67-35	6" SQ.	35'	7 GA.	11"	1X36X4	579 LBS.
SQS-67-39	6" SQ.	39'	7 GA.	11"	1X36X4	637 LBS.
SQS-77-30	7" SQ.	30'	7 GA.	15"	1 1/4X44X4	650 LBS.
SQS-77-35	7" SQ.	35'	7 GA.	15"	1 1/4X44X4	734 LBS.
SQS-77-39	7" SQ.	39'	7 GA.	15"	1 1/4X44X4	802 LBS.
SQS-77-45	7" SQ.	45'	7 GA.	15"	1 1/4X44X4	903 LBS.
SQS-87-30	8" SQ.	30'	7 GA.	15"	1 1/4X44X4	721 LBS.
SQS-87-35	8" SQ.	35'	7 GA.	15"	1 1/4X44X4	818 LBS.
SQS-87-39	8" SQ.	39'	7 GA.	15"	1 1/4X44X4	896 LBS.
SQS-87-45	8" SQ.	45'	7 GA.	15"	1 1/4X44X4	1012 LBS.
SQS-87-50	8" SQ.	50'	7 GA.	15"	1 1/4X44X4	1121 LBS.
SQS-83-39	8" SQ.	39'	3 GA.	15"	1 1/2X54X6	1200 LBS.
SQS-83-45	8" SQ.	45'	3 GA.	15"	1 1/2X54X6	1353 LBS.
SQS-83-50	8" SQ.	50'	3 GA.	15"	1 1/2X54X6	1480 LBS.

Base Cover

SQS SERIES ARE STRAIGHT WALL STEEL POLES WITH GAUGE THICKNESS AS SHOWN IN POLE DATA.

THESE POLES ARE FURNISHED WITH BASE PLATE, ANCHOR BOLTS, HAND HOLES WITH GROUND SCREW, AND TENON TOP AS REQUIRED BY CUST.

POLES TO BE PRIME PAINT FINISH UNLESS SPECIFIED DIFFERENT AT TIME OF ORDER. HOT DIPPED GALVANIZED ALSO AVAILABLE IF REQUIRED.

ON SUFFIX A POLES FOR SIDE LUMINAIRES SPECIFY AS FOLLOWS.

SQS. . . . A FOR SINGLE LUMINAIRES.
SQS. . . . 2A FOR DOUBLE LUMINAIRE @ 180°.
SQS. . . . 2A-90 FOR DOUBLE LUMINAIRE AT 90°.
SQS. . . . 3A FOR TRIPLE LUMINAIRE.
SQS. . . . 4A FOR FOUR LUMINAIRES.

CUSTOMER TO FURNISH MOUNTING INFORMATION FOR BRACKETS.

TOP TENON TO BE 2 3/8" O.D.X4" PIPE TENON ON ALL TENON TOP POLES UNLESS SPECIFIED DIFFERENT AT TIME OF ORDER.

Finish

Prime Paint
Galvanized
Dark Bronze

IMPERIAL POLES BY:
IMPERIAL PIPE & SUPPLY CO., 2750 E. WASHINGTON BLVD., LOS ANGELES, CALIF. 9002 1 (213) 268-8371

"Serving The West Since 1929"

ESB Exide

ELMA

TYPE	
EB-277V	FSS-2H-V - WITH BRACKET
EE - 120V	FSS-2H-V - " "

EMERGENCY LIGHTING SYSTEMS

Lightguard®

Totally Maintenance Free All Solid State

The reliable FSS with Model H halogen lamps provides high efficiency emergency light instantaneously on failure or interruption of AC power.

There are no moving parts—its charger, switch, and protector circuits are all solid-state. The pulse-type charger keeps the battery freshly charged; the switch circuit insures load transfer on AC failure; the protector circuit prevents excessive battery discharge. The unit is powered by the permanently sealed LEC-36 battery, which needs no watering or maintenance for its 10 year or longer life.

Model FSS 6 Volt Universal 120/277 V AC Input

PROTECTOR AND SWITCH CIRCUITS

Solid-state circuits continually monitor both AC and DC current. The switch circuit instantly connects lamps to battery on AC failure and disconnects them when normal power is restored. The protector circuit automatically monitors battery output and switches the lamps off when rated illumination time is reached, preventing excessive discharging. All components operate at 50% of their rating to insure reliability and long life.

SIGNAL LIGHTS, TEST SWITCHES, AND METERS

The unit has an internal ready/off switch; a front-mounted "PRESS-TO-TEST" switch for quick testing of lamps and battery; an amber ready-light; a red light indicating fast charge rate; and an optional front mounted voltmeter.

Specifications

LIGHTGUARD® EMERGENCY LIGHTING MODEL FSS

OPERATION

Model FSS provides emergency light automatically and instantaneously on failure or interruption of normal AC power.

RATING

	AC INPUT				DC OUTPUT	
MODEL	VOLTS	HERTZ	PHASE	WATTS	VOLTS	WATTS
FSS	120/277	60	1	35	6	100

INSTALLATION

Unit is easily field connected for a 120 or 277 volt, 60 Hz unswitched power source. It should comply with the National Electric Code and all other applicable codes.

CASE

The 18 gage steel container and 20 gage steel door are coated with an acid-resistant gray finish. The battery, and the charger and controls are in separate compartments. On the side of the case is an observation port for inspection of battery liquid level. The front panel is hinged on the top.

CHARGER

Solid-state pulse type charger restores battery to full charge within 12 hours, after a discharge not over 1.5 hours, with a 100 watt load. Charger also monitors battery voltage, and charges on fast rate when necessary. Components operate at less than 50% of rating to insure reliability and long life.

BATTERY

The LEC-36 is a 3-cell, 6 volt, sealed lead-acid, calcium-alloy grid battery. It has a 36 ampere hour capacity at the 8 hour rate, at 77° F., to 87.5% of initial voltage. (Article 700-7NEC). Positive plates have a single insulation of microporous separators. The battery case is a high-impact, heat resistant, transparent plastic container with permanently sealed cover preventing electrolyte leakage. The battery operates entirely unattended and needs no watering for 10 years or longer.

LAMPS

Case can mount three horizontally and vertically adjustable Model H high efficiency 12 watt halogen lamps. Lamps can be remotely mounted also.

Rated Illumination Time—Hours of Light To 87.5% Of Initial Voltage (6 Volts)	
No. of 12 Watt Lamps	**Hours of Light**
2	8
4	4
6	2
7	1.5

See accessory sheet 5.0 for detail specifications and light distribution curves.

DIMENSIONS

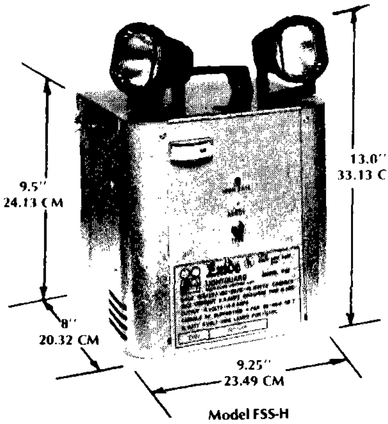

Model FSS-H

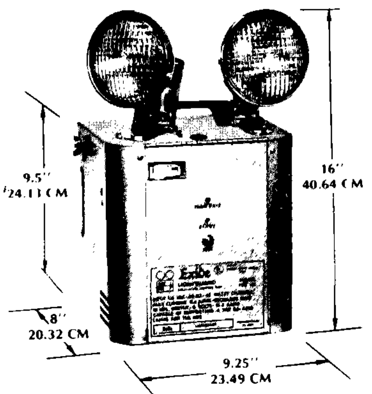

Model FSS-S

Approx.	42 lbs.
Assembled wt.	19 kg

ORDERING INFORMATION

EXAMPLE:	FSS	—	2H	—	V
	FSS	—	2S	—	V
	Model		No. of Lamps		Voltmeter

See accessories section to order accessories.

GUARANTEE

The type LEC battery specified and installed in this model LIGHTGUARD® emergency lighting unit is guaranteed by *Exide Safety Systems Division* against defects in workmanship or material for a period of fifteen years from the date appearing at the top of this certificate. The battery will be replaced at no charge during the first three years, thereafter, an adjustment charge will be made using ESSD's suggested consumer price in effect at the time of adjustment. The adjustment charge will be the suggested consumer price reduced by the percentage obtained by multiplying 5% by the number of years remaining in the 15 years at the time of battery failure, any fraction of a year shall be regarded as a whole year remaining. Any replacement battery provided under this guarantee, whether provided at no cost or for an adjustment charge, shall be subject to a new guarantee identical in terms with the guarantee for the replaced battery, this initial period under the guarantee for the replacement battery shall begin on the date of replacement.

THIS GUARANTEE CERTIFICATE MUST BE PRESENTED TO ESSD OR ITS AUTHORIZED REPRESENTATIVE AT THE TIME A REQUEST FOR BATTERY REPLACEMENT IS MADE, AND NO REPLACEMENT WILL BE MADE UNDER THIS GUARANTEE UNLESS THE CERTIFICATE IS PRESENTED. Replacements will be recorded on the back of this certificate, and the certificate will be returned to the owner of the emergency lighting unit.

In the event there is a defect in the battery, notify your nearest ESSD distributor *listed in the Yellow Pages* or ESSD. A representative of the distributor or ESSD will inspect your LIGHTGUARD® unit. Installation of replacements batteries which will be sent FOB the distributor's warehouse, is not covered by this guarantee.

This guarantee does not cover damage caused by abuse, improper installation or damage resulting from circuitry change or component changes made in the LIGHTGUARD® unit by other than ESSD or its authorized representative.

There are no guarantees or warranties which extend beyond the description on the face thereof, and WARRANTIES OF MERCHANTABILITY ARE EXCLUDED.

8/78-1

EXIDE SAFETY SYSTEMS DIVISION, ESB INCORPORATED
RANDOLPH, MASSACHUSETTS 02368

ESB SAFETY CANADA LTD.
TRENTON ONTARIO
Printed in U.S.A.
FORM 7931 2 79

EXIDE SAFETY SYSTEMS DIVISION
An ESB Ray-O-Vac Company
ESB INCORPORATED
RANDOLPH, MASS. 02368

MOUNTING BRACKETS

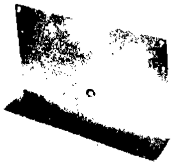

For Models B, C, LSS & NAS

16 gage steel, two finishes. Catalog MBBC (charcoal);
MBBB (brown)
17¼" x 11" x 3⅞"
44.88 cm x 27.94 cm x 9.83 cm
Approx. Shipping Weight: 5 lbs.; 2.3 kg

For Models AS & FSS

16 gage steel, gray hammertone finish.
Catalog MBF. 9½" x 5½" x 1¼"
24.13 cm x 13.97 cm x 3.17 cm
Approx. Shipping Weight: 2 lbs.; .91 kg

FOR MK-1 & QG-2

16 gage steel, brown finish.
Catalog MBQ 9" x 3"
22.86 cm x 7.62 cm
Shipping Weight
1 lb.
.45 kg

EXIDE

TYPE
"ED" "EF"

120V

DIRECTA

ordering information

BACK MOUNTED EXITS 6" Red Letters

STENCIL FACE / LUMINOUS FACE

CATALOG NO.	DESCRIPTION	CATALOG NO.
X811-R	120V "ED"	X811-LR
X812-R	120V & Emergency Socket*	X812-LR
X813-TR	277V "EF"	X813-TLR
X814-TR	277V & Emergency Socket*	X814-TLR

TOP or END MOUNTED EXITS 6" Red Letters

STENCIL FACE / LUMINOUS FACE

CATALOG NO. SINGLE FACE	DESCRIPTION	CATALOG NO. SINGLE FACE
X821-1R	120V Top or End Mtd.	X821-1LR
X822-1R	120V Top or End Mtd. & Emergency Socket*	X822-1LR
X823-TE1R	277V End Mounted	X823-TE1LR
X823-TT1R	277V Top Mounted	X823-TT1LR
X824-TE1R	277V End Mounted & Emergency Socket*	X824-TE1LR
X824-TT1R	277V Top Mounted & Emergency Socket*	X824-TT1LR
DOUBLE FACE		DOUBLE FACE
X821-2R	120V Top or End Mounted	X821-2LR
X822-2R	120V Top or End Mtd. & Emergency Socket*	X822-2LR
X823-TE2R	277V End Mounted	X823-TE2LR
X823-TT2R	277V Top Mounted	X823-TT2LR
X824-TE2R	277V End Mounted & Emergency Socket*	X824-TE2LR
X824-TT2R	277V Top Mounted & Emergency Socket*	X824-TT2LR

PENDANT MOUNTED EXITS 6" Red Letters

STENCIL FACE / LUMINOUS FACE

CATALOG NO. SINGLE FACE	DESCRIPTION	CATALOG NO. SINGLE FACE
X831-1R	120V	X831-1LR
X832-1R	120V & Emergency Socket*	X832-1LR
X833-T1R	277V	X833-T1LR
X834-T1R	277V & Emergency Socket*	X834-T1LR
DOUBLE FACE		DOUBLE FACE
X831-2R	120V	X831-2LR
X832-2R	120V & Emergency Socket*	X832-2LR
X833T2R	277V	X833T2LR
X834-T2R	277V & Emergency Socket*	X834-T2LR

RECESSED MOUNTED EXITS 6" Red Letters

STENCIL FACE / LUMINOUS FACE

CATALOG NO.	DESCRIPTION	CATALOG NO.
X841-R	120V	X841-LR
X842-R	120V & Emergency Socket*	X842-LR
X843-TR	277V	X843-TLR
X844-TR	277V & Emergency Socket*	X844-TLR

OTHER COLOR COMBINATIONS

GREEN LETTERS

STENCIL FACE OR LUMINOUS FACE

To specify substitute suffix **G** in place of **R** in Catalog No.

Example: X811-G

WHITE LETTERS AGAINST RED

LUMINOUS FACE

To specify substitute suffix **WR** in place of **R** in Catalog No.

Example: X821-1LWR

WHITE LETTERS AGAINST GREEN

LUMINOUS FACE

To specify substitute suffix **WG** in place of **R** in Catalog No.

Example: X821-1LWG

---

*DC Lamps (Emergency) Standard 21 Cp (18w) See Ordering Information.

DIRECTA

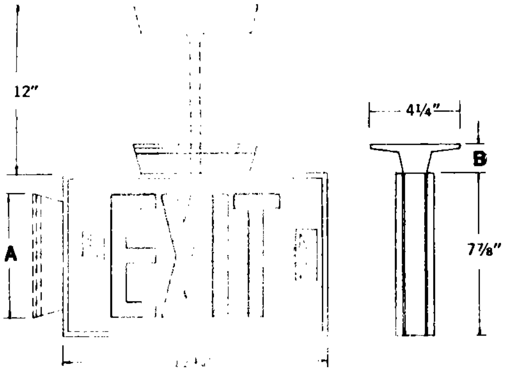

VOLTAGE	A	B
120	7½"	1¼"
277	7½"	1¼"

(TOP, END, PENDANT MOUNTED)

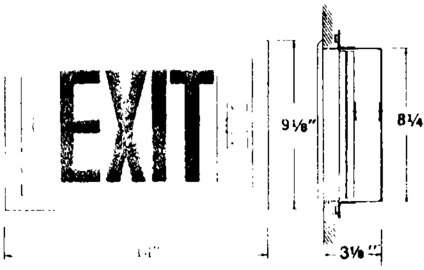

RECESSED

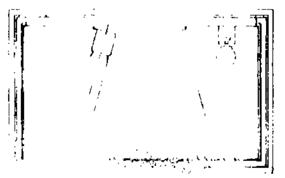

TYPICAL UNIT WITH PANEL REMOVED

specifications

HOUSING: one piece extruded aluminum — .070 minimum wall thickness — with precision-mitered corners. Integral design of extrusion adds strength and compactness to the unit and simplifies the internal hardware.

DOOR PANELS: stencil or luminous face, rugged .050 aluminum backed with non-combustible, impact resistant fiberglass inscription panels. Door snaps securely in closed position by means of concealed hinge and integral latching device. Close fitting of door against internal ribs of extrusion prevents light leakage.

FINISH: all exposed metal parts etched for permanence. Cast aluminum canopy and pendant assembly matte black.

BACK MOUNTED UNITS: furnished with heavy gauge, rust resistant steel backplate.

TOP OR END MOUNTED UNITS: furnished with die-cast aluminum canopy.

PENDANT UNITS: same as Top or End mounted except furnished with pendant assembly consisting of die-cast aluminum canopy and 12" stem. For other stem lengths specify length required after Catalog No. Example: X831-2R-20".

RECESSED UNITS: furnished with heavy gauge, rust resistant, steel recessing box and aluminum trim and door. Minimum wall opening required is 8½" x 13¼".

LAMPS: 120 Volt fixtures are supplied with two 20W. T6½ extended life lamps. 277 Volt fixtures are supplied with two step down transformers.

ARROWS: supplied standard with all units. Normally concealed, may be exposed by sliding arrow plate up or down.

DOWNLIGHTING: provided in all units by means of rectangular aperture at bottom of housing. Aperture is shielded with acrylic prismatic diffuser.

MOUNTING: all surface units mount to standard outlet box (by others) with mounting hardware provided.

LABELS: Underwriter's Laboratories listed.

D.C. LAMP ORDERING INFORMATION:

6 Volt — Lamp No. 1130
12 Volt — Lamp No. 1142
32 Volt — Lamp No. 1230
120 Volt — Lamp No. T15

optional features

☐ **STANDARD WORDING SIGNS:** Red letters on fiberglass luminous panel
MEN, WOMEN, LADIES (4" letters); **LOUNGE, STAIRS** (3½" letters)
FIRE ESCAPE, REST ROOMS (2¾" letters on two lines)
To specify add word required after Catalog No. Example X824-1R-MEN

☐ **SPECIAL WORDING SIGNS:** Silk screened on glass panel. Contact factory.

☐ **TAMPER PROOF SCREW:** for security applications add suffix "TP" after Catalog No. Example: X821-R-TP

☐ **WIRE GUARD:** Add suffix "GD" after Catalog No. Example: X811-R-GD

☐ **MOISTURE PROOF:** Add suffix "MP" after Catalog No. Example: X811-R-MP

☐ **OPTIONAL FINISHES:**
For Ebony Black finish on stencil face only add suffix "EBS" after catalog No.
Example: X811-R-EBS. For other finishes contact factory.

EXIDE LIGHTGUARD

ESB WILLSON CANADA LTD.
TRENTON ONTARIO

ESB INCORPORATED
RANDOLPH, MASS. 02368

ESB Exide®

Form [illegible] 78

Class I, Div. 2,
Groups A,B,C,D
Class II, Div. 2,
Groups E,F,G
Class III*

UL 57 Listed

TYPE
LORD
A23

Stylmaster Enclosed and Gasketed Incandescent Fixtures: Stanchion and Outlet Box.

Suitable for use in Wet Locations.
With Aluminum Mounting Hood and Prismatic Glass Globe.†

R̄ TWK LIN

	Size (Inches)	Catalog Number	
		With Globe and Guard	With Globe Only
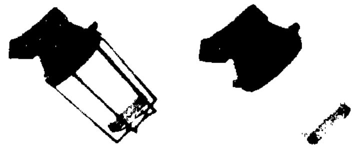	**45° Stanchion—1-1/4" Conduit**		
	60-200 Watt A-23		
	1-1/4	VPAN10125G	VPAN10125
	200-300 Watt PS-30		
	1-1/4	VPAN20125G	VPAN20125
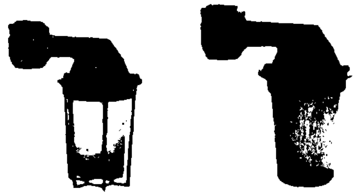	**Wall—Body includes outlet box with five tapped openings** With mounting lugs and four close-up plugs		
	60-200 Watt A-23		
	1/2	VPWB1050G	VPWB1050
	3/4	VPWB1075G	VPWB1075
	200-300 Watt PS 30	VPWB2050G	VPWB2050
	1/2	VPWB2075G	VPWB2075
	3/4		
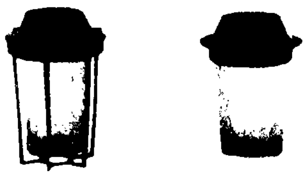	**Ceiling—Outlet Box Mounting** Fits SEH or VPJB cast outlet box or 3-1/4" or 4" octagonal outlet box. Furnished with screws and gasket.‡		
	60-200 Watt A-23	VPOB10G	VPOB10
	200-300 Watt PS-30	VPOB20G	VPOB20
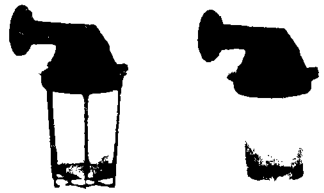	**Wall—Outlet Box Mounting** Fits SEH or VPJB cast outlet box or 3-1/4" or 4" octagonal outlet box. Furnished with screws and gasket.‡		
	60-200 Watt A-23	VPOBW10G	VPOBW10
	200-300 Watt PS-30	VPOBW20G	VPOBW20

WITH LPR-25-AN-REFLECTOR

---

*See page 4 for temperature limits on individual Stylmaster fixtures. †Order reflectors and accessories separately. See pages 7, 8 and 9. ‡Order SEH box from Cat. Sec. A, 3-1/4" or 4" octagonal steel boxes from Sec. OB and VPJB cast box from this catalog section.

Discount Schedule UD
Refer to Pricing Index for price, weight, and standard package

Appleton ELECTRIC COMPANY

1701 W Wellington Ave
Chicago, Illinois 60657

F2-9

TYPE
A 23

R. TWR. LTN

Porcelain and Polyester Reflectors for Stylmaster Incandescent Lighting Fixtures, and Fixture Weights.

Suitable for Use in Wet Locations.
Available in Steel or Fiberglass Reinforced Polyester.

	Description	Catalog Number Porcelain	Polyester
	Porcelain Steel and Polyester Reflectors For 60W-300W		
	Standard Dome	LPR-25ST	LPRP-25ST
	30° Angle	LPR-25AN	LPRP-25AN

REFLECTOR

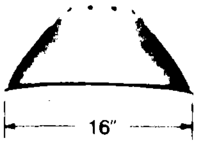

Porcelain Standard Dome

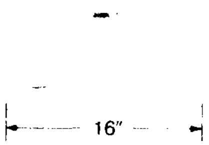

Polyester Standard Dome

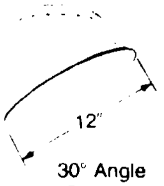

30° Angle Porcelain

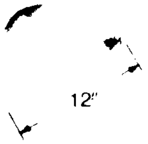

30° Angle Polyester

Fixture and Accessory Weights of Stylmaster, V-51, and VSA/VSB Series†

Typical Mounting Hoods

Fixture	Pendant	Lbs.	Feed-Thru	Lbs.	Ceiling	Lbs.	Wall	Lbs.	Stanchion	Lbs.
Stylmaster	VPA75	2	VPC75	2	VPX75	2	VPOBW10	3	VPAN-125	3
V-51	VA75	2	VC75	3	VXHA75	4	VGA75	4	VMAN-125	2
VSA/VSB	VSA2-75	4	—	—	VSB-2	4	—	—	—	—

		Globes and Guards				Reflectors			
Fixture	Type	Globe	Lbs.	Guard	Lbs.	Standard Dome	Lbs.	30° Angle	Lbs.
Stylmaster	60-200W	VPGL-1	2	VPGU-1	1	LPR-25ST	3	LPR-25AN	2
	200-300W	VPGL-2	3	VPGU-2	1	LPRP-25ST	2	LPRP-25AN	2
V-51	60-150W	VGL-1CL	1	VGU-1*	1	VRW-1ST	3	VRW-1AN	2
	150-300W	VGL-2CL	2	VGU-2*	1	VRW-2ST	3	VRW-2AN	3
VSA/VSB	60-300W	VSGL-2CL	3	G-1316	1	VSR-2ST	3	VSR-2AN	3
	300-500W	VSGL-5CL	4	G-1318	2	VSR-5ST	4	VSR-5AN	3

†For weights in kilograms multiply number of lbs. by .4536. *VWG-1 and VWG-2 Steel Guards weigh 1 lb.

Discount Schedule UD
Refer to Pricing Index for price, weight, and standard package

Appleton® ELECTRIC COMPANY
1701 W. Wellington Ave
Chicago, Illinois 60657

TYPE

A23

R TWR LTN

Dimensions: Stylmaster Incandescent Lighting Fixtures.

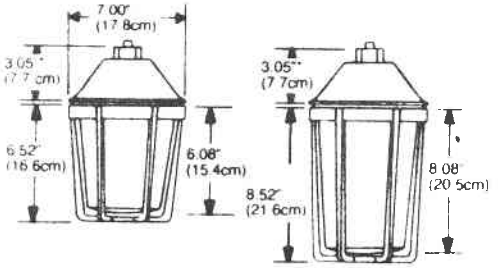

Pendant Mount

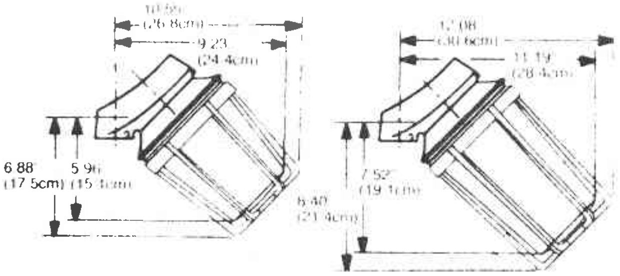

45° Angle Mount◇

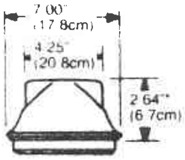

Feed-Thru Mount

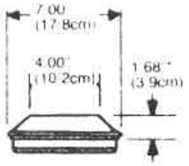

Outlet Box Mount

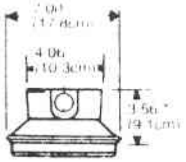

Ceiling Mount

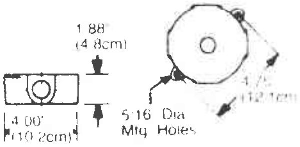

Outlet Box and Mounting Body

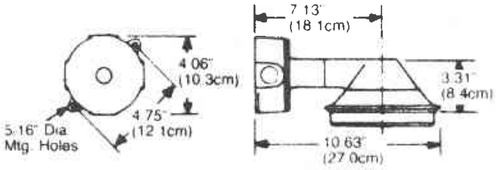

Wall Mount with Junction Box

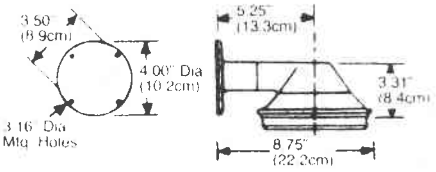

Wall Mount

---

*Height of hood is measured to bottom of flange. Height of globe and guard is from bottom of flange ◇Dimensions of angle are from center of pipe. Height is measured from pipe stop in stanchion hood.

Appleton ELECTRIC COMPANY

1701 W. Wellington Ave
Chicago, Illinois 60657

RECEIVED [illegible] 1980

Stearns-Roger

C21700 DEC 17 '80

SR No CP-11 File No 6

A UNIT OF GENERAL SIGNAL GS

GUTH

TYPE	
FA=277V	M4402/DW/277
FC=120V	M4402/DW/120

Both w/M4090 chain hanger.

GUTH DUO-LINER®

...the ultimate in industrial fluorescent lighting

unique design enables 48°C ambient operation

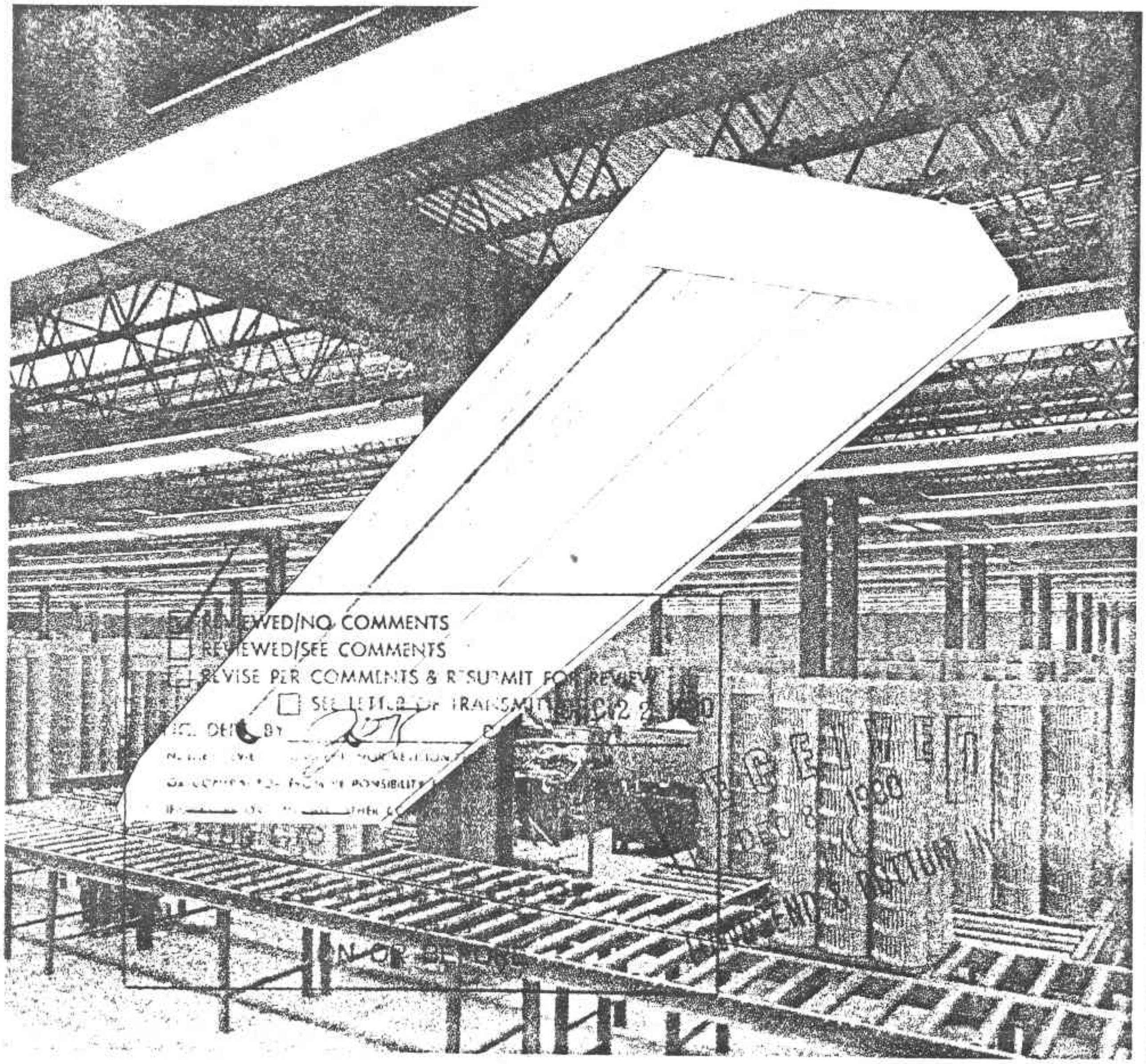

☑ REVIEWED/NO COMMENTS
☐ REVIEWED/SEE COMMENTS
☐ REVISE PER COMMENTS & RESUBMIT FOR REVIEW
☐ SEE LETTER OF TRANSMITTAL DEC 22 1980
[illegible] BY RJT

RECEIVED DEC 8 1980 TOWNSEND & BOTTUM INC.

Form 781
Section 5

GUTH

TYPE

FA=277V M4402/DW/277

FC=120V M4402/DW/120

GUTH DUO-LINER

...the ultimate in industrial fluorescent lighting

Both w/M4090 chain hangers

unique design enables 48°C ambient operation

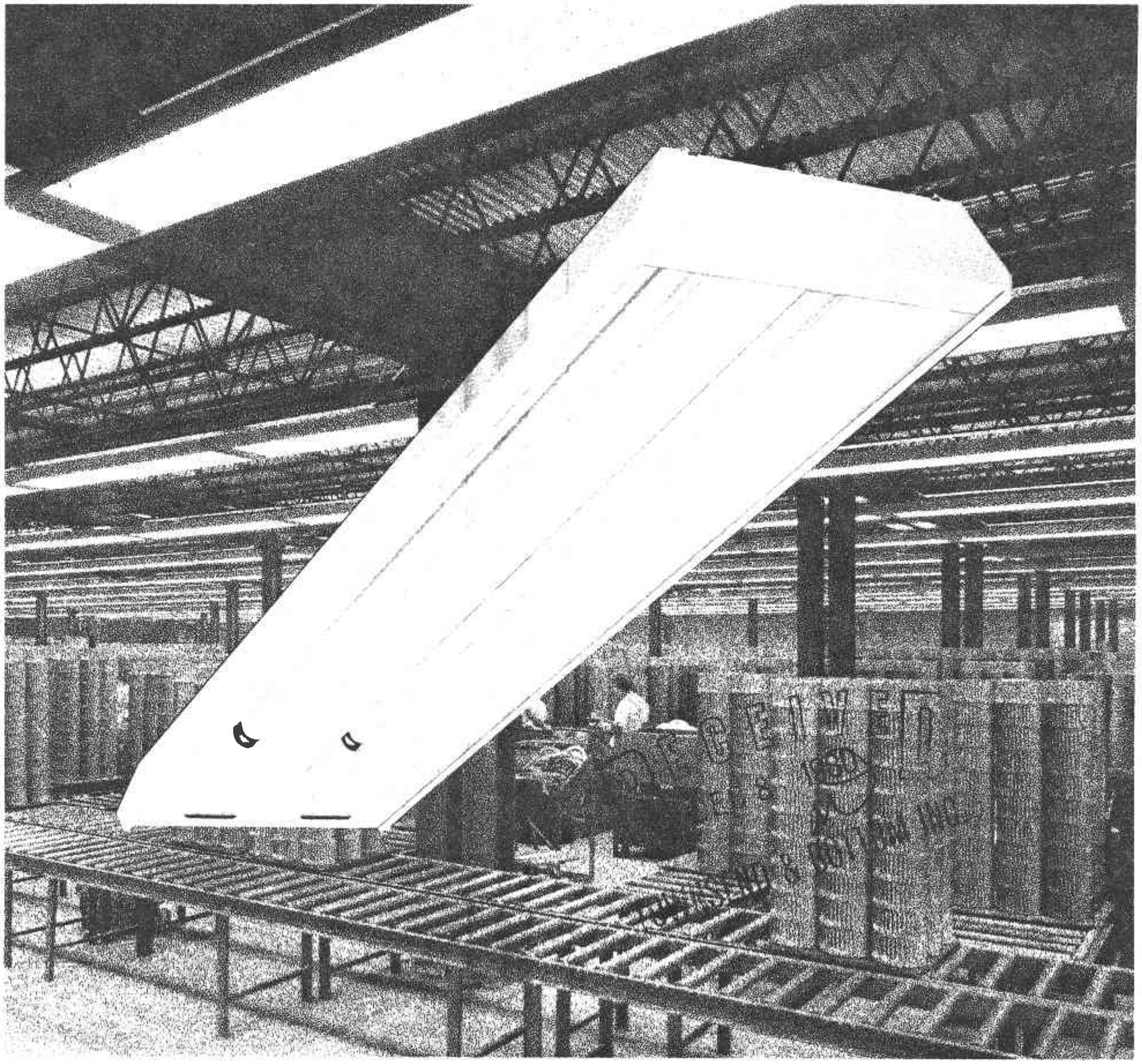

3.8.3-29

Form 781
Section 5

Guth's **DUO-LINER**® operates extra cool for use in higher industrial ambients ...Up to 48°C!

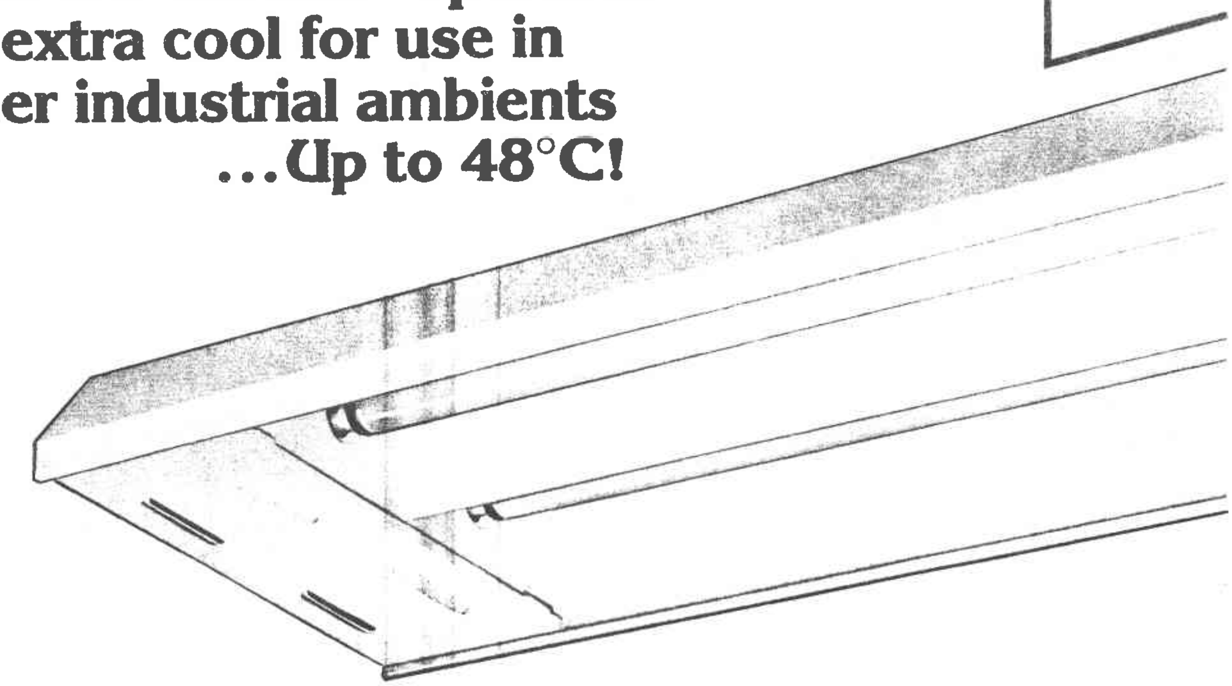

The Guth Duo-Liner is the most sophisticated industrial fluorescent design available. With Duo-Liner's end-mounted and ventilated ballast compartment it operates extra-cool and will provide normal ballast life in high ambients up to 48°C (118°F)...Or, when using Duo-Liner in ambients lower than 40°C, you extend ballast life for extra long service which saves owner's replacement parts and maintenance costs.

Plus, Duo-Liner offers better styling than conventional industrial fluorescent lighting. With added concern for aesthetics in industrial facilities, Duo-Liner provides a shallower, wider fixture design for broader light distribution and its 4-1/2" depth permits more overhead clearance for moving equipment.

Guth's unique Duo-Liner...It operates normally in higher ambients and saves owner's maintenance costs year after year ...It's the Cool One.

Specification Features:

End mounted, ventilated ballast compartment isolates electrical components from lamp heat...Extends ballast life up to 3-1/2 times in typical 25° C ambients ☐ Ballast compartment door hinges down for easier servicing of electrical components and door may be removed for servicing ballast at floor level ☐ Fixture construction of 20 gauge cold rolled steel finished in white acrylic enamel, baked-on 310°F ☐ Fixtures standard with 10% uplight to reduce ceiling contrast ☐ Fast thru-wiring between ballast compartments through oversized k.o.'s...Continuous rows install with lamps installed ☐ Compression sockets prevent lamps from loosening due to vibration ☐ Units only 4-1/2" deep providing extra clearance in low ceiling areas. Units 15-1/2" wide for better lamp utilization and higher efficiency ☐ Choice of either single wall or double wall reflectors for extra strength and consistent light control since outer wall absorbs any abuse ☐ Ballasts are CBM/ETL high power factor. Super premium ballasts standard on 430 M.A. units ☐ Continuous row mounted units may be ordered as "/RO," less-end-caps, to save money. Units rigidly fasten together to form extra strong lighting component ☐ U.L. listed and union made.

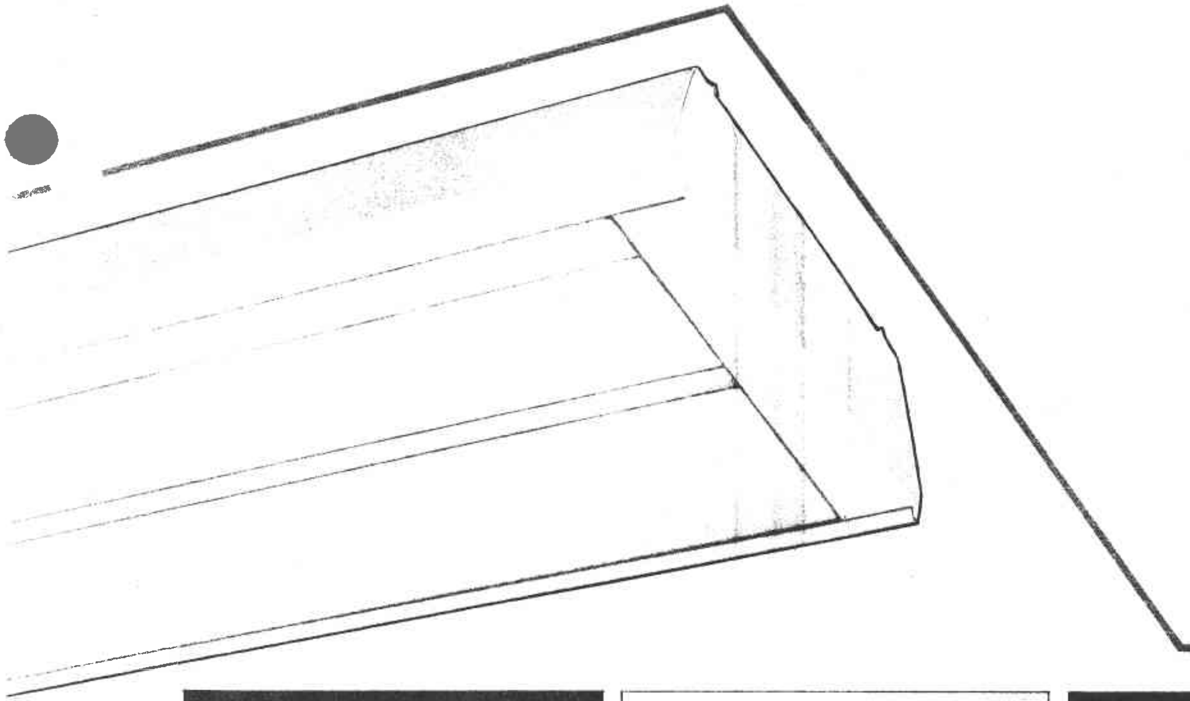

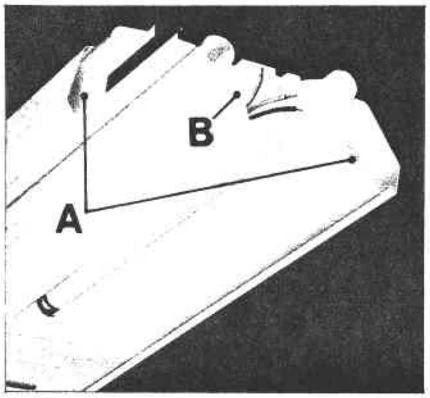

Duo-Liners available with double wall acrylic reflectors (A)...Makes units extra strong and permits outer wall to take rough industrial abuse while not affecting light distribution. Center "V" wireway (B) for quick thru-wiring. No need to remove lamps, wires feed internally from fixture to fixture.

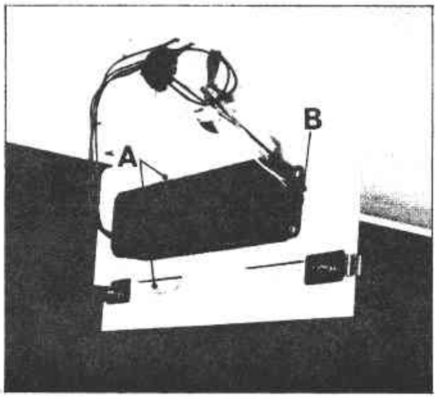

Ballast compartment cover hinges down for electrical wiring...May be removed for simplified ballast replacement. Note slotted air vents (A) permitting air-flow for cooler ballast operation and ballast bolted (B) on both ends for maximum heat dissipation.

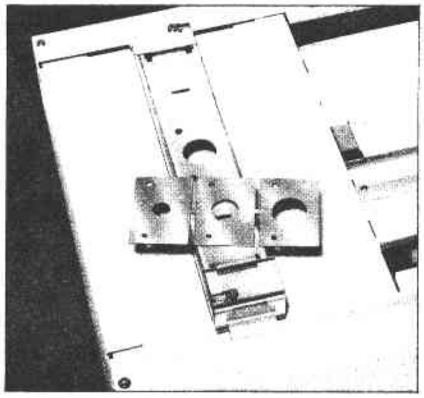

Unique sliding hanger may be placed anywhere along entire length of fixture ...Alleviates alignment problems when hanging. Hanger designed to accept chains, conduit, threaded rod or Guth hangers which offer job site versatility for faster installation. Hanger is cadmium plated for lasting resistance to corrosion. Must be ordered separately.

DUO-LINER EXTENDS BALLAST LIFE UP TO 3-1/2 TIMES IN 25°C AMBIENTS!

AMBIENT TEMPERATURE RATINGS OF DUO-LINER FOR FULL-RATED BALLAST LIFE

Duo-Liner Catalog No.	Lamps	Maximum Ambient for full ballast life (12 yr.)	Ballast life when operating Duo-Liner in typical 25°C ambient**
M4402*	4/F40T12CW (R.S.)	48°C (118°F)	40 years
M4404	2/F96T12CW (Slimline)	40°C (104°C)	30 years
M4408	2/F96T12CW/HO (800 MA)	45°C (113°F)	36 years
M4411	2/F96T12CW/VHO (1500 MA)	41°C (106°F)	31 years

*Furnished standard with Super Premium Ballast.
**Pendant Mounted

Catalog Listings

FC
FA

Catalog No.	Lamps/ Wattage	Bulb	Milliamp Rating	Length
M4400/120	2/40	T-12	430	56-13/16"
M4402/120 M4402/277	4/40*	T-12	430	106-5/16"
M4404/120	2/75	T-12	425	103-1/16"
M4406/120	2/60	T-12	800	55-1/16"
M4408/120	2/105	T-12	800	103-1/16"
M4410/120	2/110	T-12/T-17	1500	55-1/16"
M4411/120	2/215	T-12/T-17	1500	103-1/16"

*Lamps in tandem

All Units for 120 volt operation. For other voltage, change "/120" to voltage desired.

For in-row fixtures (which are less ends) add suffix "/RO" to catalog numbers. Each row of fixtures requires one complete unit plus balance of "/RO" fixtures.

Installation Data

Duo-Liner "RO" units mean less end caps. Continuous row mounted fixtures slot together and fasten with sheet metal screws. End caps are used only on each end of row. When installing in continuous rows, order one complete unit and the balance as "/RO" units...Saves time and money.

800 M.A. & 1500 M.A. R.O. Unit (and 425 M.A., 75 Watt Unit)

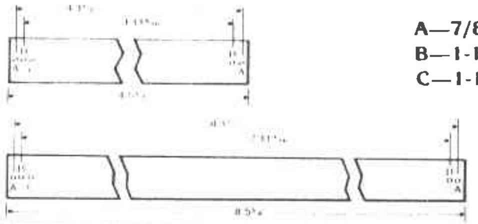

A—7/8" K.O.
B—1-1/16" K.O.
C—1-1/8" K.O.

430 M.A. R.O. Unit

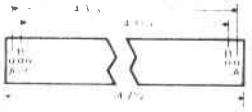

430 M.A. Doublet R.O. Unit

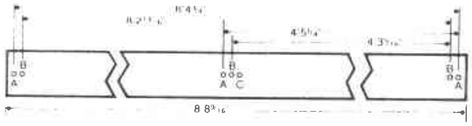

Accessories

SLIDING HANGER—may be adjusted along entire length of fixture. Sliding hanger accepts 1/4", 3/8", 1/2" conduit, threaded rod, chains or Guth hangers. Order catalog number M4416 (per pair).

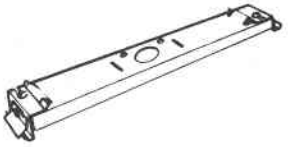

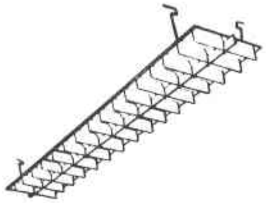

METAL LOUVERS—Provides 30" x 30° shielding. Heavy gauge steel finished in white acrylic enamel. Louvers hinge for relamping. Order catalog number M4417. Use 2 per 8' unit.

WIRE GUARD—Extra strong guard is 1/8" diameter wire welded at each intersecting point. Guard is cadmium plated to resist corrosion and hinges for lamp replacement. Order catalog number M4418. Use 2 per 8' unit.

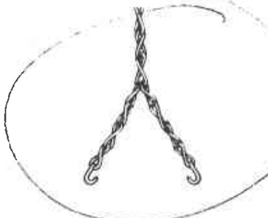

CHAIN HANGERS—Heavy duty "Y" chain for proper balance of unit and equal weight distribution. Chain is 4' long and fits into slots on fixture top or into sliding hanger. Order catalog number M4090 (per pair).

SWIVEL HANGERS—Heavy gauge steel hangers include adjusters at bottom to properly align fixtures. Hangers also self adjust so fixtures hang straight. Order M3937 for 12" length (per pair). Order M3939 for 24" length (per pair). Other lengths available.

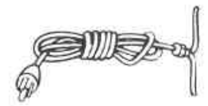

CORDSETS—For 12 gauge six foot grounded cord and receptacle enabling fast installation and easy relocation of fixtures. Order M4081.

PULL SWITCH—For single circuit pull switch add "/PS" to catalog number.

PHOTOMETRIC DATA (Zonal Cavity Method)

M4411 with T-17 lamps.
S/M Ratio 1.4:1

Ceiling Refl.	80%			50%			10%		
Wall Refl.	50	30	10	50	30	10	50	30	10
RCR				20%					
1	.77	.74	.71	.70	.68	.66	.63	.61	.60
2	.68	.63	.59	.62	.59	.56	.56	.53	.51
3	.60	.54	.50	.55	.51	.47	.49	.46	.44
4	.53	.47	.42	.49	.44	.40	.44	.40	.38
5	.47	.40	.35	.43	.38	.34	.39	.35	.32
6	.42	.35	.31	.39	.33	.29	.35	.31	.28
7	.37	.31	.26	.35	.29	.25	.31	.27	.24
8	.33	.27	.23	.31	.25	.22	.28	.23	.21
9	.30	.23	.19	.28	.22	.19	.25	.21	.17
10	.27	.21	.17	.25	.20	.16	.23	.18	.15

M4402, M4404, M4408, M4411 with T-12 lamps.
S/M Ratio 1.4:1

Ceiling Refl.	80%			50%			10%		
Wall Refl.	50	30	10	50	30	10	50	30	10
RCR				20%					
1	.78	.75	.73	.71	.69	.67	.63	.62	.60
2	.69	.64	.61	.63	.60	.57	.56	.54	.52
3	.61	.56	.51	.56	.52	.48	.50	.47	.45
4	.54	.49	.44	.50	.45	.41	.45	.41	.39
5	.48	.42	.37	.44	.39	.35	.40	.36	.33
6	.43	.37	.32	.40	.34	.30	.36	.32	.28
7	.38	.32	.28	.36	.30	.26	.32	.28	.25
8	.34	.28	.23	.32	.26	.23	.28	.24	.21
9	.31	.24	.20	.28	.23	.20	.26	.21	.18
10	.28	.22	.18	.26	.21	.17	.23	.19	.16

3.8.3-32

GUTH LIGHTING
A UNIT OF GENERAL SIGNAL
P.O. BOX 7079 • ST. LOUIS, MISSOURI 63177

The WallLiter-S™

A UNIT OF GENERAL SIGNAL

Stearns-Ro GUTH

C21700 [illegible] '80

SR No CP-11 File No 7

A new series of energy-efficient wall brackets.

TYPE
HF 120V

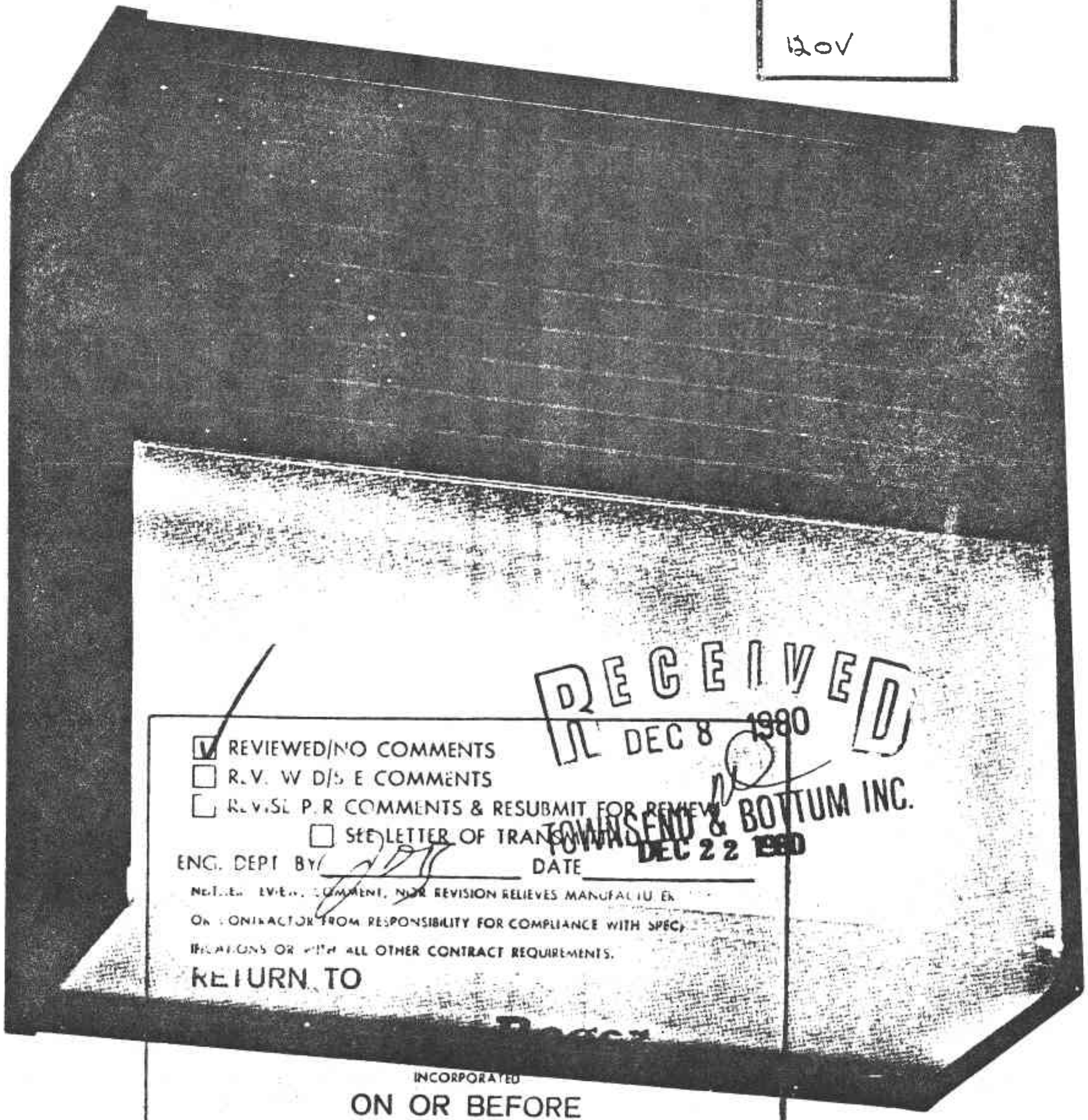

☑ REVIEWED/NO COMMENTS
☐ REVIEWED/SEE COMMENTS
☐ REVISE PER COMMENTS & RESUBMIT FOR REVIEW
☐ SEE LETTER OF TRANSMITTAL

ENG. DEPT BY ______ DATE ______

NEITHER REVIEW, COMMENT, NOR REVISION RELIEVES MANUFACTURER OR CONTRACTOR FROM RESPONSIBILITY FOR COMPLIANCE WITH SPECIFICATIONS OR WITH ALL OTHER CONTRACT REQUIREMENTS.

RETURN TO

INCORPORATED

ON OR BEFORE

RECEIVED DEC 8 1980

TOWNSEND & BOTTUM INC.
DEC 22 1980

RECEIVED DEC 29 1980

GUTH

The WallLiter-S™

A new series of energy-efficient wall brackets.

TYPE
HF
120V

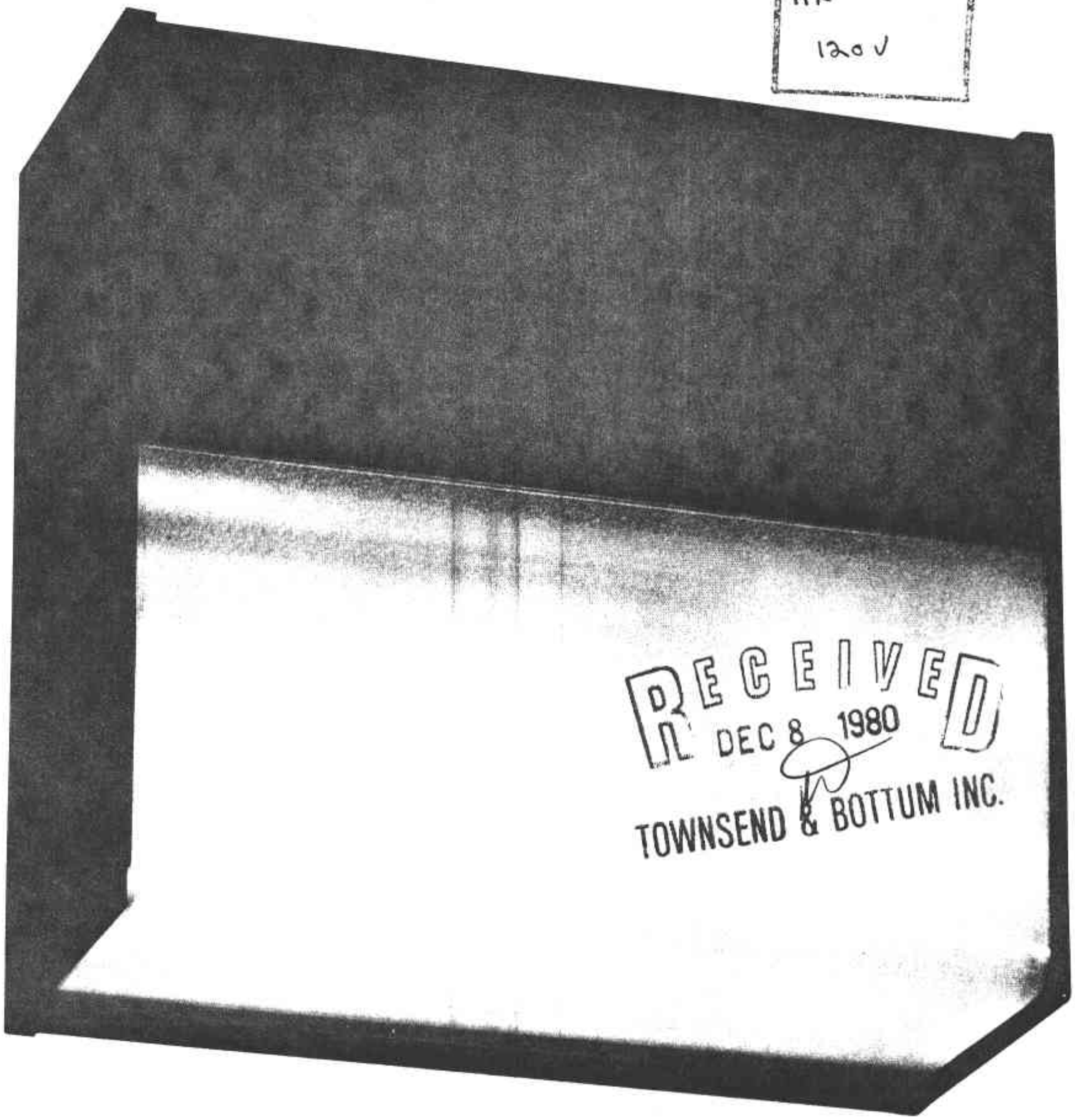

RECEIVED
DEC 8 1980
TOWNSEND & BOTTUM INC.

The Wall Liter-S™

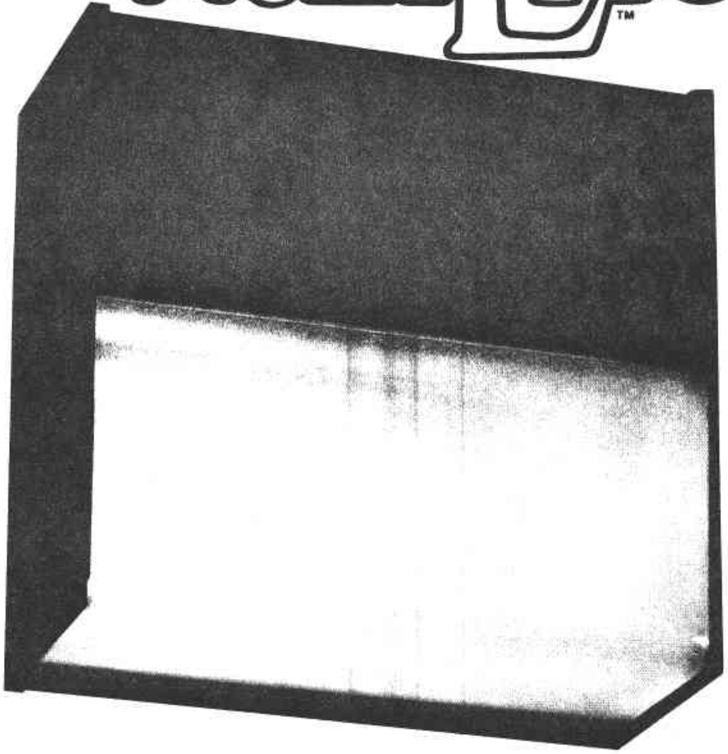

Smartly styled exterior wall brackets for low watt H.I.D. lamps.

The distinctive linear design of Wall-Liter S enables the outdoor lighting to compliment building facades with a clean, compact wall bracket which protrudes 5-3/16" from the surface... The thinnest bracket available for up to 250 watt lamps.

And Wall-Liter S exterior brackets are energy minded, too! Expressly designed in two sizes for lower wattage H.I.D. lamps, from 35 watt L.P.S. up to 250 watt H.P.S. Wall-Liter S affords the versatility of producing equal lighting levels with lower wattage lamps, or, providing additional illumination for equal wattage . . . Either way, Wall-Liter S offers peak efficiency which saves operating dollars and reduces electrical consumption.

SPECIFICATIONS:

CONSTRUCTION Heavy gauge die-cast aluminum ends and aluminum housing for rugged outdoor applications. Unit finished in bronze acrylic enamel, baked on at 310°F for lasting appearance. Also available in black and two-tone bronze/beige finish.

ELECTRICAL Ballasts are HPF type and available for all voltages. Electrical components are compartmentalized from lamp heat to extend ballast and capacitor life. Lampholder of heavy duty porcelain with special compression screw-shell to eliminate lamp loosening from vibration. U.L. listed "Suitable for Wet Locations."

OPTICAL Reflector of specular Alzak* aluminum for peak efficiency and lasting lighting performance. Specular Alzak reflectors won't pit or corrode and wipe clean for lasting efficiency. Reflector held captive in aluminum extrusions to assure consistent performance. Reflector forms an air barrier to isolate lamp heat from electrical components. Side reflector surfaces provide lateral illumination for additional projection close to wall surfaces.

REFRACTOR Extra strong, heat formed Pyrex** glass lens is resistant to thermal shock enabling Wall-Liter S' compact fixture design. Lens is diffused for better light distribution and silastically sealed in hinged, extruded frame. Lens and ballast cover are PVC gasketed to form water tight seal.

* TM Alcoa **TM Corning

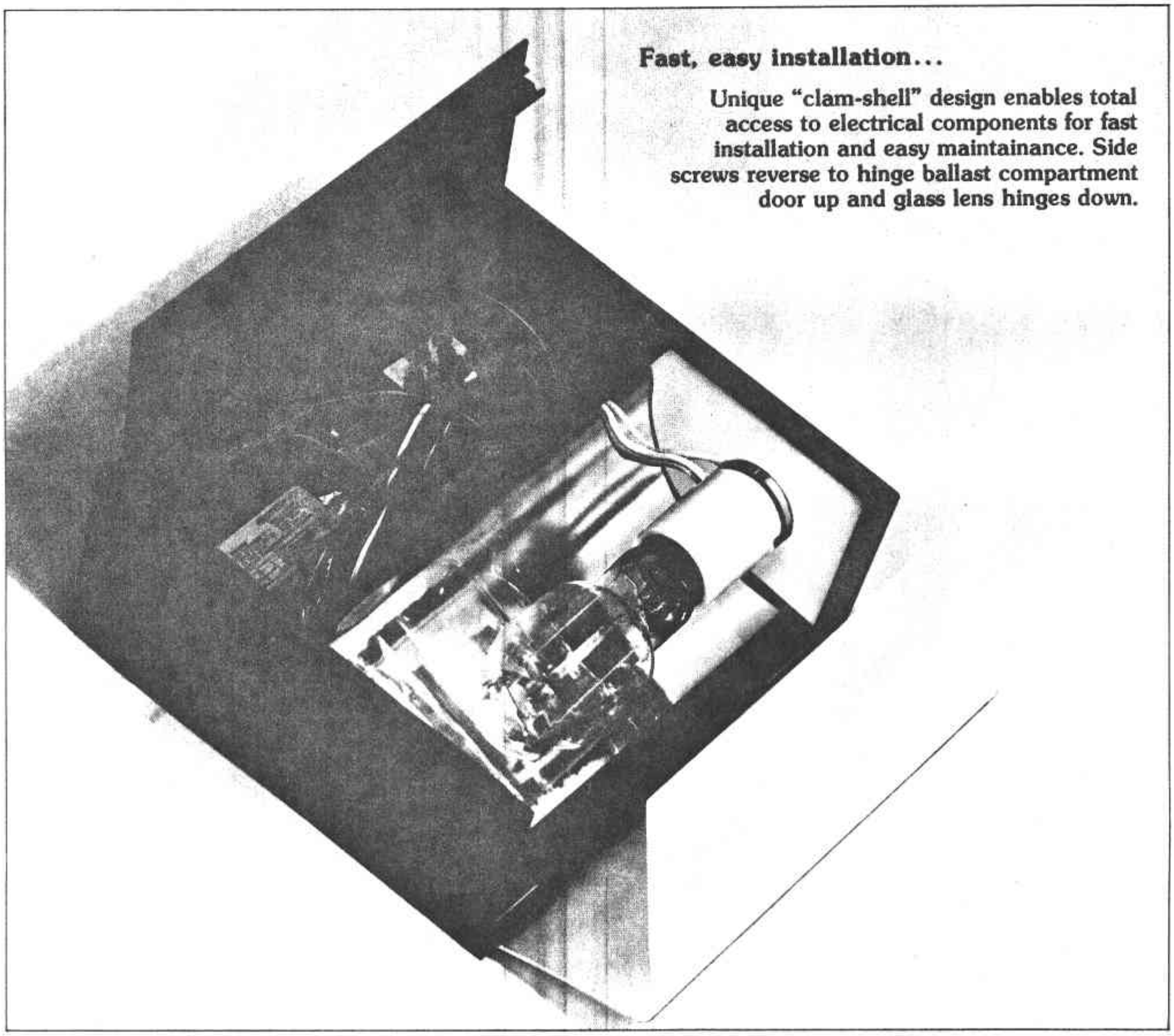

Fast, easy installation...

Unique "clam-shell" design enables total access to electrical components for fast installation and easy maintainance. Side screws reverse to hinge ballast compartment door up and glass lens hinges down.

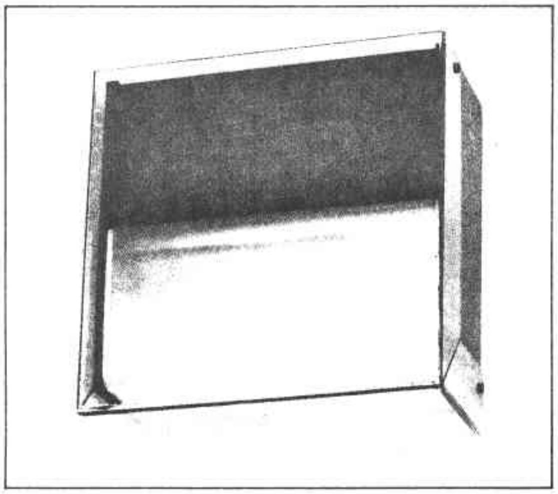

For extra protection, Wall-Liter S is available with virtually indestructible clear polycarbonate shield. Shield extends one-inch from unit to eliminate breakage and is open top-and-bottom for self cleaning action.

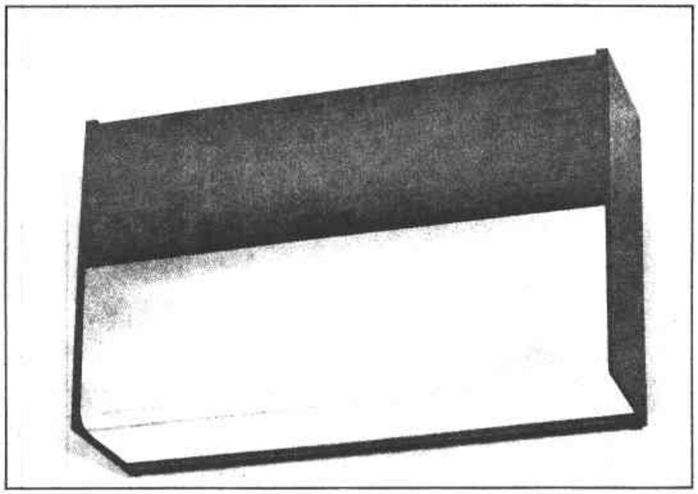

The Wall-Liter S is also available for 35 watt and 55 watt low pressure sodium lamps... the most efficient lamps known to man. The monochromatic yellow color is non-attractive to insects and penetrates fog conditions, plus, it maintains constant light output throughout 18,000 hours of lamp life.

CATALOG LISTINGS

"HF"

Catalog No.	Lamp Type	Wattage	Bulb	S/M Ratio	Shipping Weight (lbs.)	Dimensions Ht.	Wt.	Dp.
B17-601/120	MV	100	E23½ or BT25	3.5:1	18	11⅝"	12⅜"	5³/₁₆"
B17-602/120	MV	175	E28 or BT28	3.5:1	18	11⅝"	12⅜"	5³/₁₆"
B17-701/120	MV	250	E28 or BT28	3.5:1	23	11⅝"	18⅞"	5³/₁₆"
B17-603/120	MH	175S	BT28	3.5:1	19	11⅝"	12⅜"	5³/₁₆"
B17-703/120	MH	250	E28 or BT28	3.5:1	23	11⅝"	18⅞"	5³/₁₆"
B17-604/120	HPS	70	E23½ or BT25	3.5:1	18	11⅝"	12⅜"	5³/₁₆"
B17-605/120	HPS	100	E23½ or BT25	3.5:1	17	11⅝"	12⅜"	5³/₁₆"
B17-606/120	HPS	150	E23½ or BT25	3.5:1	19	11⅝"	12⅜"	5³/₁₆"
B17-705/120	HPS	250	E18	3.5:1	25	11⅝"	18⅞"	5³/₁₆"
B17-607/120	LPS	35/55	SOX 35/ SOX 55	3.5:1	23	11⅝"	18⅞"	5³/₁₆"

All units listed for 120 volt operation. For other voltages, change "/120" to voltage desired.

Accessories:

For tamper-proof screws, add "TP"
For photo-cell control, add "PEC"
For polycarbonate lens shield, add "/LS"
For cast aluminum outlet box, add "CAB"
For outside corner mounting bracket, order B214
For matte black finish, add "/BLACK"
For bronze housing with beige ballast compartment finish, add "/BR-BE"

For Saving Energy Use H.P.S. and L.P.S. Wall-Liter S!

Lighting designs for outdoor environments are under severe criticism for wasting electrical energy and, yet, there is a growing need for night time security lighting. Therefore, the use of higher efficiency lamps is desirable since L.P.S. and H.P.S. lamps develop over twice the lumens per watt as conventional mercury vapor. Not only are higher footcandle levels achieved for better protection, but, as importantly, there is a significant reduction in wasted electricity.

Compare these Lumens-per-Watt

Lamp Type	Wattage	Lumens	Lumens/ Watt
LPS (clear)	35	4,800	137
LPS (clear)	55	8,000	145
HPS (clear)	70	5,800	82
HPS (clear)	100	9,500	95
HPS (clear)	150	16,000	106
HPS (clear)	250	27,500	110
MH (clear)	175/S	15,000	85
MH (clear)	250	20,500	82
MV (coated)	175	8,500	48
MV (coated)	250	13,000	52

INSTALLATION DATA AND DIMENSIONS

Wall-Liter S' unique "clam-shell" design opens entire unit for complete access. Center screw on each side of unit is reversed, freeing ballast compartment cover and glass lens hinges down.

With ⅜" I.P. stud, unit mounts directly to 4" cast outlet box or two 5/16" K.O.'s for mounting to wall. Die-cast ends include ⅞" K.O. on both ends for ½" side conduit hub wiring or photo cell control.

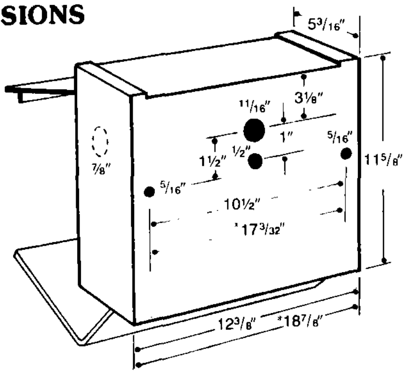

* **For 250W H.I.D. and L.P.S. units.**

Mounting Height Conversion Chart*

Mounting Height		Footcandle Multiplier
8′	—	1.56
10′	—	1.00
12′	—	.69
14′	—	.51
16′	—	.39
18′	—	.31
20′	—	.25
22½′	—	.20
25′	—	.16

**Photometrics taken with 10′ mounting height. For other mounting heights use footcandle multiplier above.*

Photometrics:

B17-605 100 W. H.P.S.
Clear Lamp 9,500 Lumens

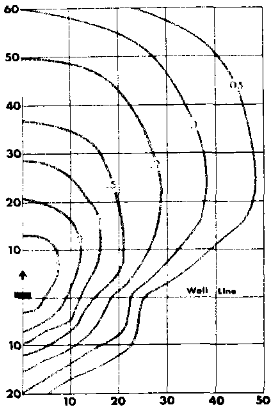

B17-606 150 W. H.P.S.
Clear Lamp 16,000 Lumens

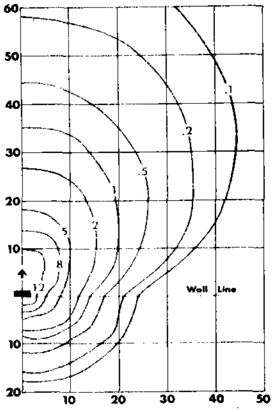

B17-705 250 W. H.P.S.
Clear Lamp 27,500 Lumens

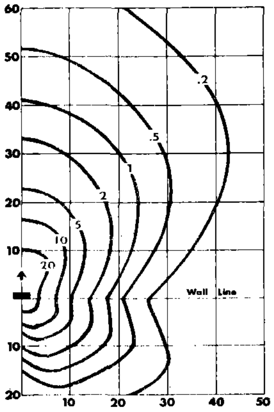

B17-607 55 W. L.P.S.
Clear Lamp 8,000 Lumens

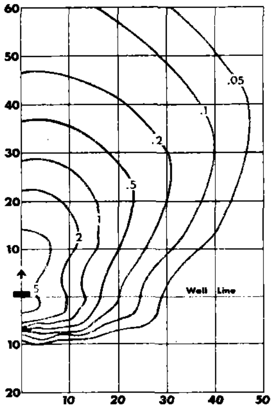

3.8.3-37

GUTH LIGHTING
A UNIT OF GENERAL SIGNAL
P.O. BOX 7079 • ST. LOUIS, MISSOURI 63177

UU

X

X

SOLAR ONE

D. A. Thompson DEC [illegible]

By

By

30 KVA XFMR ITC DWG 16150-1

Via Brightway Elect Supply. (CP11-3)

NOTE:

1. UL LISTED
2. FINISH: ASA-61 (LIGHT GREY) OVER PRIMER
3. UNIT IS SHIPPED AS INDOOR WITH WEATHERPROOF SHIELDS TO BE INSTALLED BY CUSTOMER

RECEIVED DEC 2 3 1980

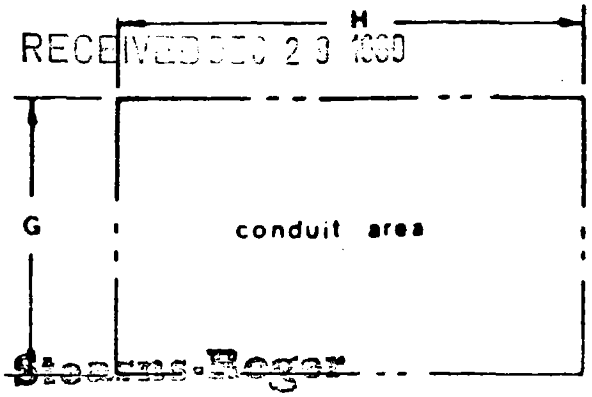

~~Stearns-Roger~~

C21700 DEC 17 '80

SR No CP-11 File No 003

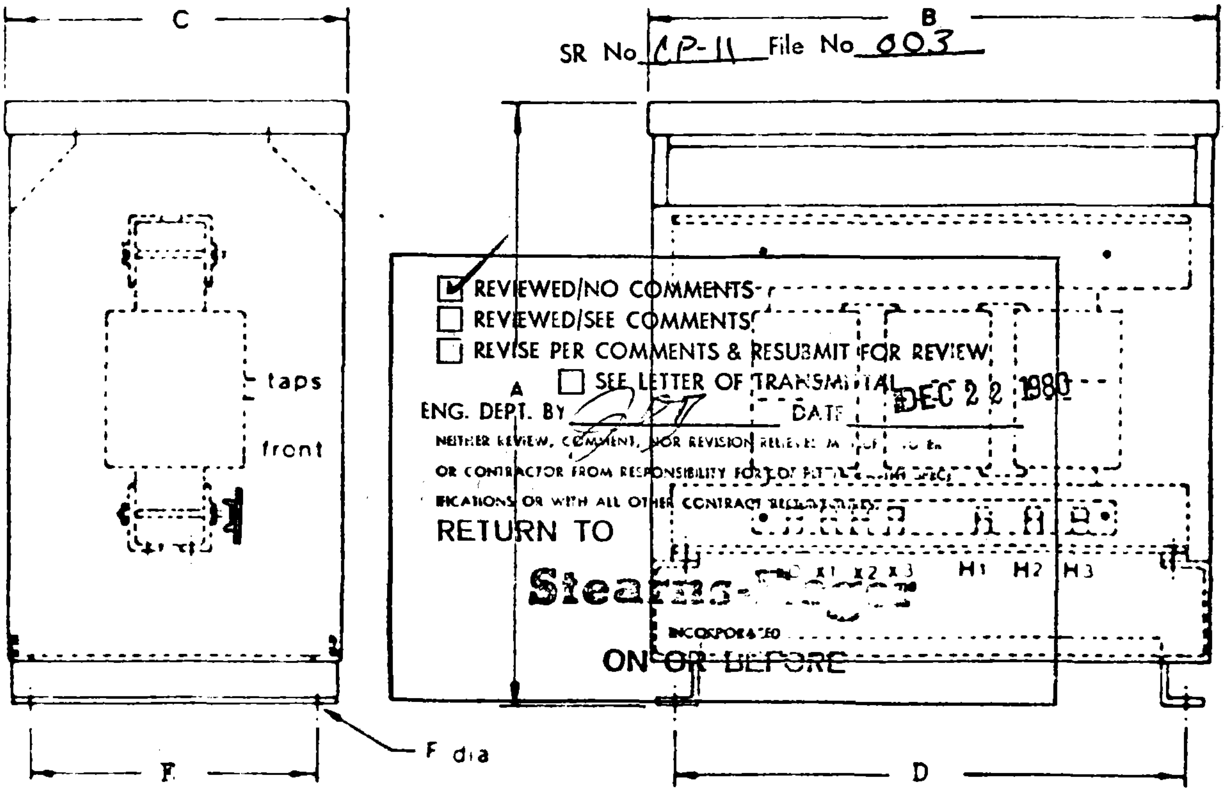

☑ REVIEWED/NO COMMENTS
☐ REVIEWED/SEE COMMENTS
☐ REVISE PER COMMENTS & RESUBMIT FOR REVIEW
☐ SEE LETTER OF TRANSMITTAL

ENG. DEPT. BY DATE DEC 22 1980

NEITHER REVIEW, COMMENT, NOR REVISION RELIEVES [illegible] OR CONTRACTOR FROM RESPONSIBILITY FOR [illegible] SPECIFICATIONS OR WITH ALL OTHER CONTRACT REQUIREMENTS.

RETURN TO

Stearns-Roger

INCORPORATED

ON OR BEFORE

KVA	QTY	A	B	C	D	E	F	G	H	APPR WT	REMARKS
~~15~~	~~2~~	~~27½~~	~~22½~~	~~16½~~	~~20~~	~~13~~	~~7/16~~	~~13~~	~~17½~~	~~275~~	~~CAT.NO. 15T82B6~~
30	7	27½	26	16½	23½	13	7/16	13	21	385	CAT.NO. 30T82B6

job name
BRIGHTWAY ELECTRIC SUPPLY
16210 MANNING WAY
CERRITOS, CA. 90701

p.o. 017810-D

drawn by	KP
checked	DH
approved	
date	11-24-80

ITC
INTERNATIONAL TRANSFORMER CORPORATION
6900 E. WASHINGTON BLVD.
CITY OF MONTEBELLO
CALIFORNIA

no.	revision

drawing & s.o. no.
s o # 16150-1 3.8.3-39

title OUTLINE DRAWING
INDOOR FLOOR MOUNTED
.6 KV CLASS, 3Ø, 60 HZ
CLASS 220° INSULATION, 80°C RISE
PRI. 480 SEC. 208Y/120
TAPS. 2+4-2½% TYPE. BTUL

NOTE:

1. UL LISTED
2. FINISH: ASA-61 (LIGHT GREY) OVER PRIMER
3. UNIT IS SHIPPED AS INDOOR WITH WEATHERPROOF SHIELDS TO BE INSTALLED BY CUSTOMER

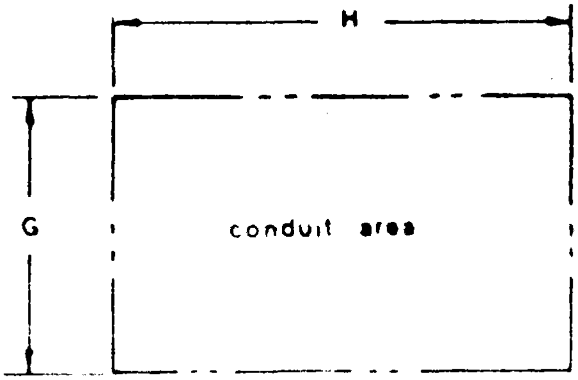

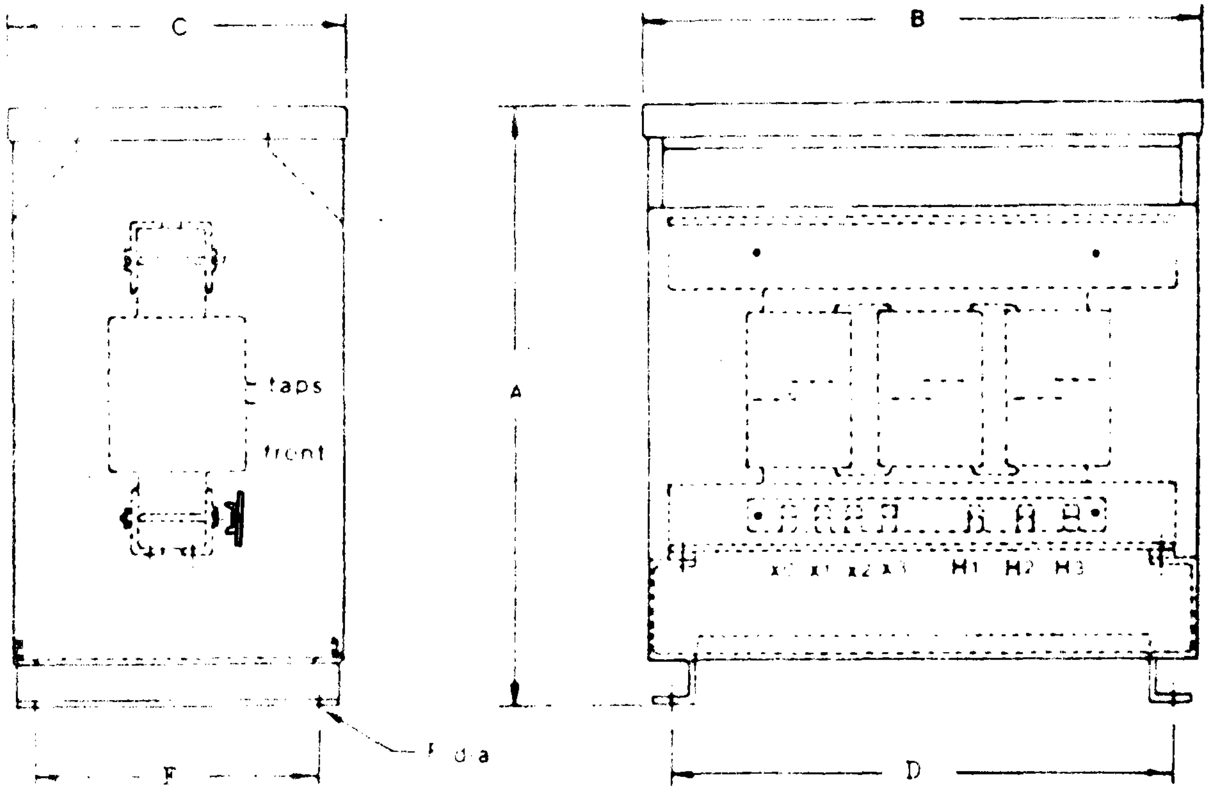

KVA	QTY	A	B	C	D	E	F	G	H	APPR WT	REMARKS
~~15~~	~~2~~	~~27½~~	~~22½~~	~~16½~~	~~20~~	~~13~~	~~7/16~~	~~13~~	~~17½~~	[illegible]	~~CAT.NO. 15T82B6~~
30	7	27½	26	16½	23½	13	7/16	13	21	385	CAT.NO. 30T82B6

job name BRIGHTWAY ELECTRIC SUPPLY
16210 MANNING WAY
CERRITOS, CA. 90701

p.o. 017810-D

drawn by KP
checked DH
approved
date 11-24-80

INTERNATIONAL TRANSFORMER CORPORATION
6900 E. WASHINGTON BLVD.
CITY OF MONTEBELLO
CALIFORNIA

title OUTLINE DRAWING
INDOOR FLOOR MOUNTED

.6 KV CLASS, 3∅, 60 HZ
CLASS 220°INSULATION, 80°C RISE
PRI. 480, SEC. 208Y/120
TAPS: 2+4-2½%, TYPE: BTUL

no.	revision

drawing & s.o. no.
s.o. # 16150-1

NOTE:

1. UL LISTED
2. FINISH: ASA-61 (LIGHT GREY) OVER PRIMER
3. UNIT IS SHIPPED AS INDOOR WITH WEATHERPROOF SHIELDS TO BE INSTALLED BY CUSTOMER

RECE[illegible] 1980

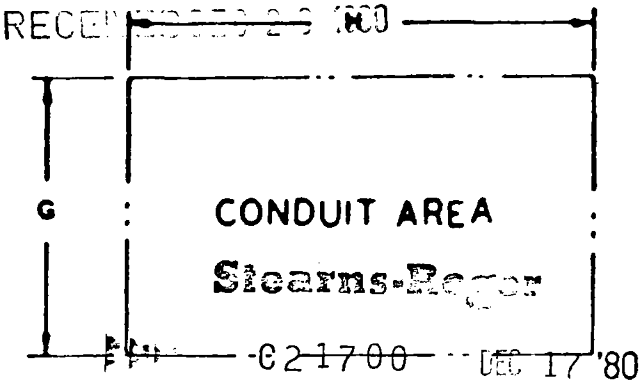

Stearns-Roger

C 2 1700 DEC 17 '80

SR No *CP.11* File No *004*

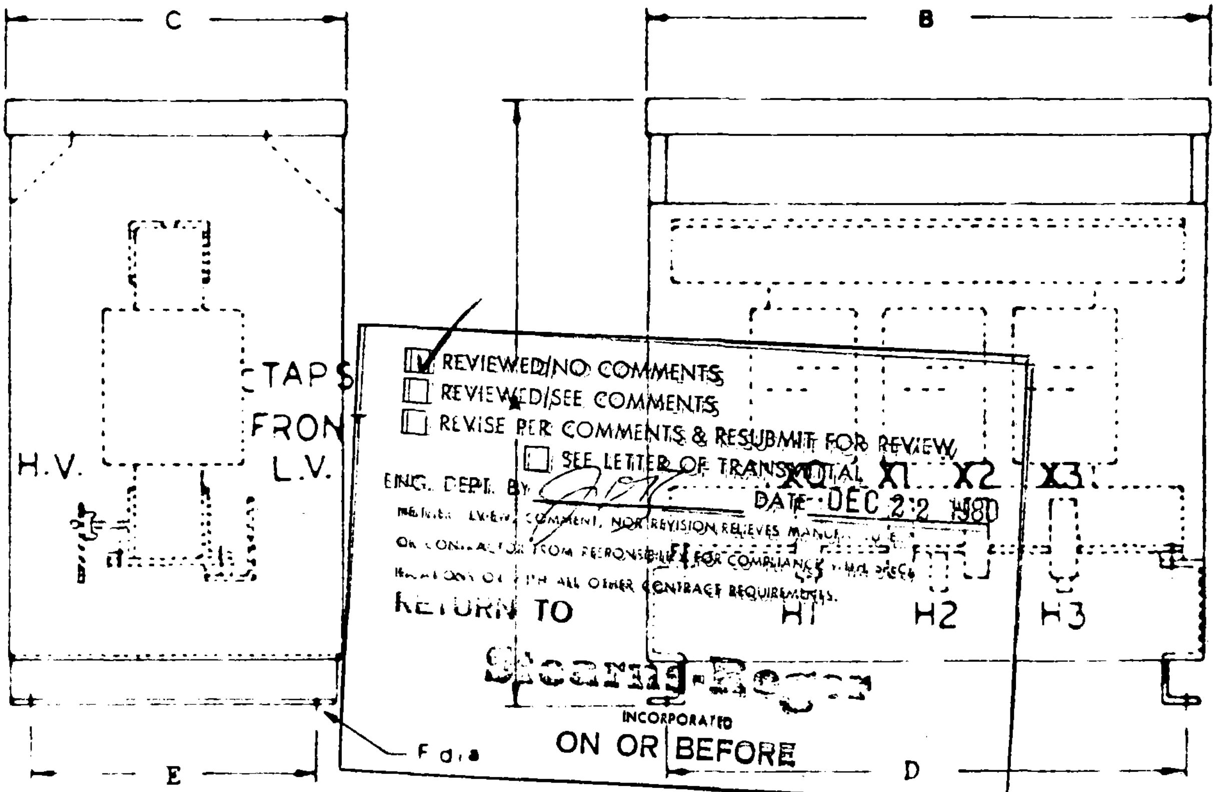

☑ REVIEWED/NO COMMENTS
☐ REVIEWED/SEE COMMENTS
☐ REVISE PER COMMENTS & RESUBMIT FOR REVIEW
☐ SEE LETTER OF TRANSMITTAL

ENG. DEPT. BY ____ DATE DEC 22 1980

NEITHER REVIEW, COMMENT, NOR REVISION RELIEVES MANUFACTURER OR CONTRACTOR FROM RESPONSIBILITY FOR COMPLIANCE WITH SPECIFICATIONS OR WITH ALL OTHER CONTRACT REQUIREMENTS.

RETURN TO

Stearns-Roger
INCORPORATED

ON OR BEFORE

KVA	QTY	A	B	C	D	E	F	G	H	APPROX WT.	REMARKS
150	1	50	42½	27	39½	23½	3/4	24½	37½	1500	CAT.NO.150T87B6

job name
BRIGHTWAY ELECTRIC SUPPLY
16210 MANNING WAY
CERRITOS, CA. 90701

P.O. 017810-D

drawn by KP
checked PH
approved
date 11-24-80

INTERNATIONAL TRANSFORMER
CORPORATION
6900 E. WASHINGTON BLVD.
CITY OF MONTEBELLO
CALIFORNIA

no. revision

drawing & s.o. no.
S.O. # 16150-2
3.8.3-41

title
OUTLINE DRAWING
INDOOR FLOORMOUNT
3Ø, .6 KV CLASS, 60HZ
CL. 220°C INS., 80 °C RISE
PRI. 480 SEC. 480Y/277
TAPS: 2+4-2½% TYPE: BTUL

NOTE:

1. UL LISTED
2. FINISH: ASA-61 (LIGHT GREY) OVER PRIMER
3. UNIT IS SHIPPED AS INDOOR WITH WEATHERPROOF SHIELDS TO BE INSTALLED BY CUSTOMER

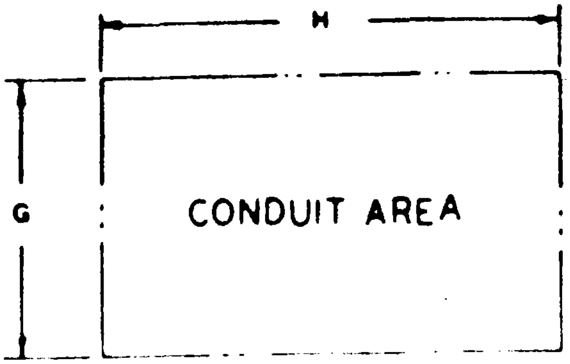

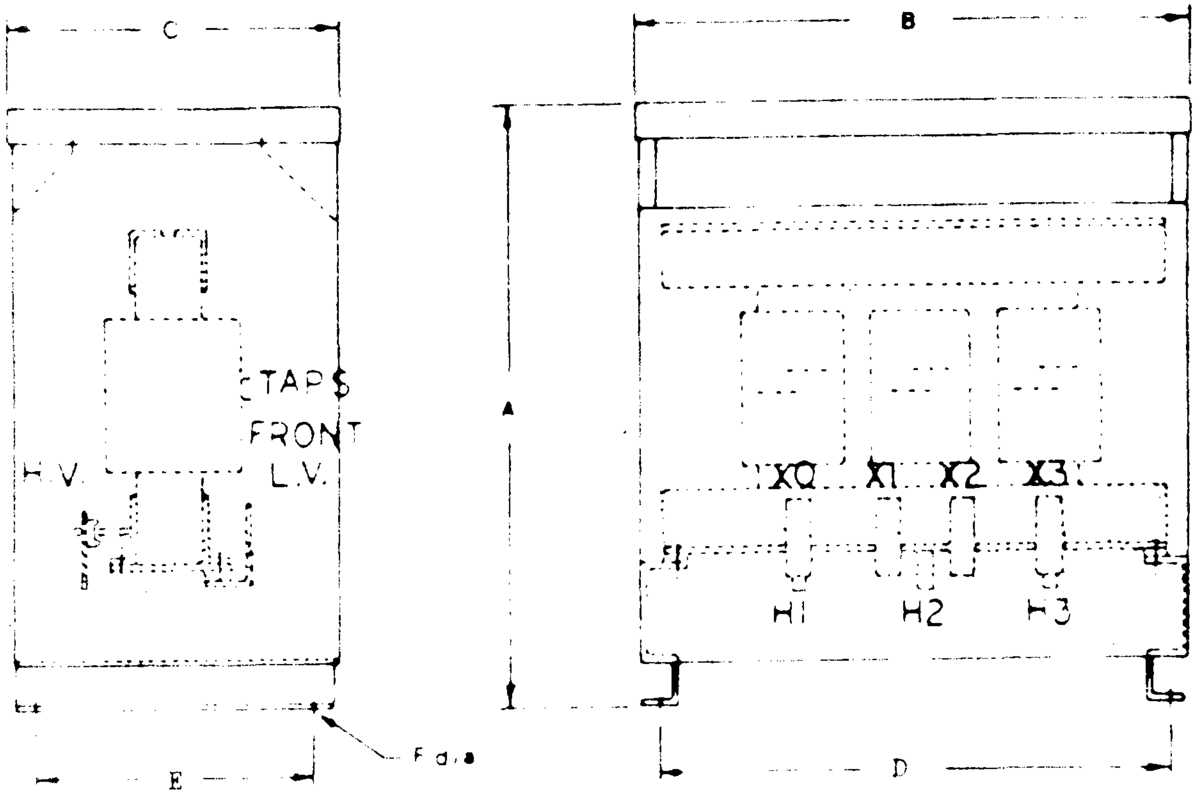

KVA	QTY	A	B	C	D	E	F	G	H	APPROX WT.	REMARKS
150	1	50	42½	27	39½	23½	3/4	24½	37½	1500	CAT.NO.150T87B6

job name
BRIGHTWAY ELECTRIC SUPPLY
16210 MANNING WAY
CERRITOS, CA. 90701

P.O. 017810-D

drawn by KP
checked PH
approved
date 11-24-80

no. revision

INTERNATIONAL TRANSFORMER CORPORATION
6900 E. WASHINGTON BLVD.
CITY OF MONTEBELLO
CALIFORNIA

drawing & s.o. no.
S.O. # 16150-2
3.8.3-42

title
OUTLINE DRAWING
INDOOR FLOORMOUNT
3Ø , .6 KV CLASS, 60HZ
CL. 220°C INS., 80 °C RISE
PRI. 480 SEC. 480Y/277
TAPS: 2+4-2½% TYPE: BTUL

RECEIVE... 2 8 1980

NOTE:

1. UL LISTED
2. FINISH: ASA-61 (LIGHT GREY) OVER PRIMER
3. UNIT IS SHIPPED AS INDOOR WITH WEATHERPROOF SHIELDS TO BE INSTALLED BY CUSTOMER.

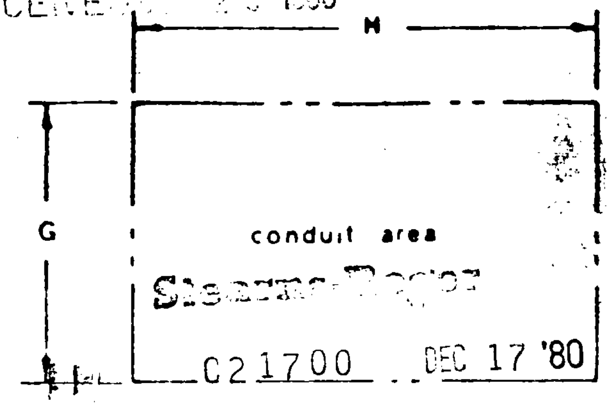

Stearns-Roger
C21700 DEC 17 '80

SR No CP.11 File No 5

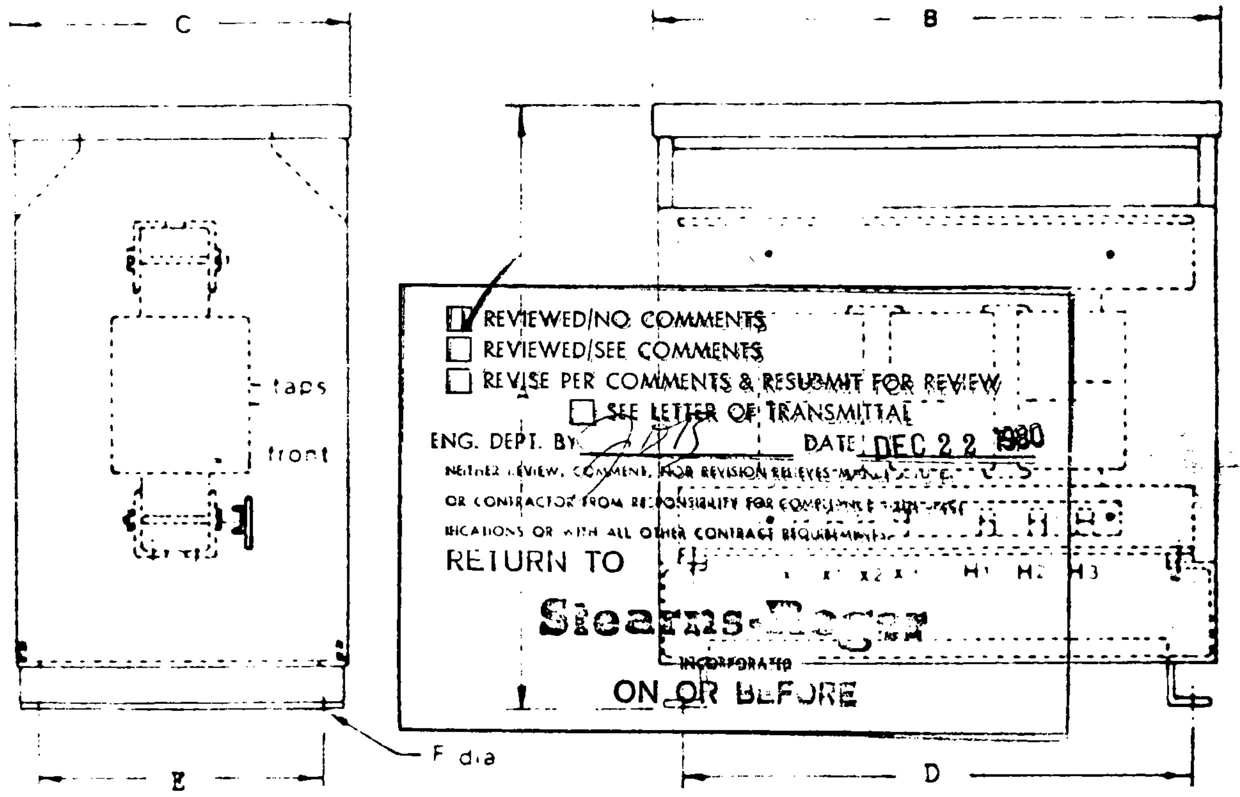

☑ REVIEWED/NO COMMENTS
☐ REVIEWED/SEE COMMENTS
☐ REVISE PER COMMENTS & RESUBMIT FOR REVIEW
☐ SEE LETTER OF TRANSMITTAL

ENG. DEPT. BY JRS DATE DEC 22 1980

NEITHER REVIEW, COMMENT, NOR REVISION RELIEVES MANUFACTURER OR CONTRACTOR FROM RESPONSIBILITY FOR COMPLIANCE WITH SPECIFICATIONS OR WITH ALL OTHER CONTRACT REQUIREMENTS.

RETURN TO Stearns-Roger INCORPORATED ON OR BEFORE

KVA	QTY	A	B	C	D	E	F	G	H	APPR WT	REMARKS
45	1	41	31	20½	28½	17	9/16	16	26	715	45T87B6

job name BRIGHTWAY ELECTRIC SUPPLY
16210 MANNING WAY
CERRITOS, CA. 90701

p.o. 017810-D

drawn by KP
checked PH
approved
date 11-24-80

INTERNATIONAL TRANSFORMER CORPORATION
6900 E. WASHINGTON BLVD.
CITY OF MONTEBELLO
CALIFORNIA

title OUTLINE DRAWING
INDOOR FLOOR MOUNTED

.6 KV CLASS, 3ø, 60 HZ
CLASS 220° INSULATION, 80°C RISE
PRI. 480 SEC. 480/277
TAPS: 2+4-2½% TYPE: BTUL

no revision

drawing & s.o. no
s.o. # 16150-3

NOTE:

1. UL LISTED
2. FINISH: ASA-61 (LIGHT GREY) OVER PRIMER
3. UNIT IS SHIPPED AS INDOOR WITH WEATHERPROOF SHIELDS TO BE INSTALLED BY CUSTOMER.

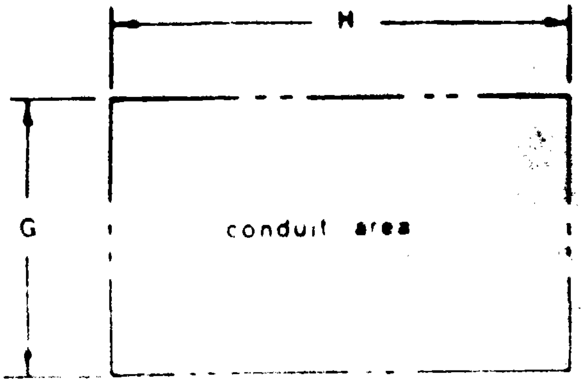

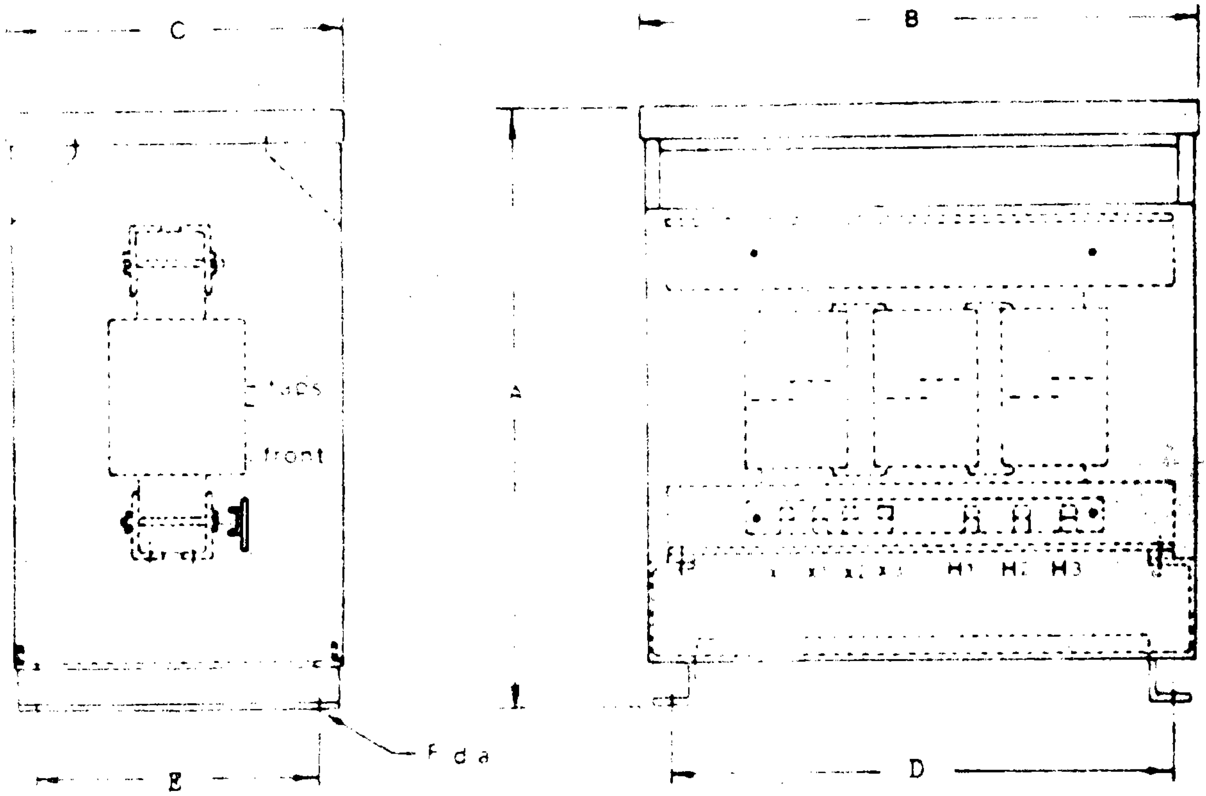

KVA	QTY	A	B	C	D	E	F	G	H	APPR WT	REMARKS
45	1	41	31	20½	28½	17	9/16	16	26	715	45T87B6

job name BRIGHTWAY ELECTRIC SUPPLY
16210 MANNING WAY
CERRITOS, CA. 90701

p.o. 017810-D

drawn by KP
checked PH
approved
date 11-24-80

ITC

INTERNATIONAL TRANSFORMER CORPORATION
6900 E. WASHINGTON BLVD.
CITY OF MONTEBELLO
CALIFORNIA

title OUTLINE DRAWING
INDOOR FLOOR MOUNTED

.6 KV CLASS, 3ø, 60 HZ
CLASS 220° INSULATION, 80° C RISE
PRI. 480 , SEC. 480/277
TAPS: 2+4-2½% , TYPE: [illegible]

no	revision

drawing & s.o. no
s.o. # 16150-3

3.8.3-44

Class I, Div. 2,
Groups A,B,C,D
Class II, Div. 2,
Groups E,F,G
Class III*

UL 7 Listed

TYPE
LORD'S
A23

Stylmaster Enclosed and Gasketed Incandescent Fixtures: Stanchion and Outlet Box.

Suitable for use in Wet Locations.
With Aluminum Mounting Hood and Prismatic Glass Globe.†

R̄ TWR LTN

	Size (Inches)	Catalog Number With Globe and Guard	Catalog Number With Globe Only
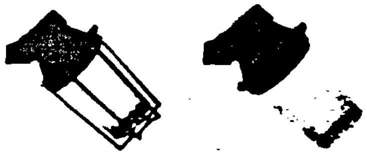	**45° Stanchion—1-1/4" Conduit**		
	60-200 Watt A-23 1-1/4	VPAN10125G	VPAN10125
	200-300 Watt PS-30 1-1/4	VPAN20125G	VPAN20125
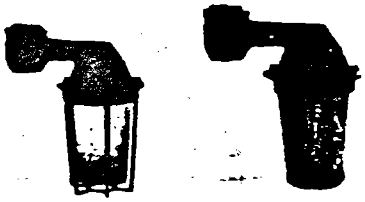	**Wall—Body includes outlet box with five tapped openings** With mounting lugs and four close-up plugs		
	60-200 Watt A-23		
	1/2	VPWB1050G	VPWB1050
	3/4	VPWB1075G	VPWB1075
	200-300 Watt PS 30		
	1/2	VPWB2050G	VPWB2050
	3/4	VPWB2075G WITH LPR-25-AN-REFLECTOR	VPWB2075
	**Ceiling—Outlet Box Mounting** Fits SEH or VPJB cast outlet box or 3-1/4" or 4" octagonal outlet box. Furnished with screws and gasket.‡		
	60-200 Watt A-23	VPOB10G	VPOB10
	200-300 Watt PS-30	VPOB20G	VPOB20
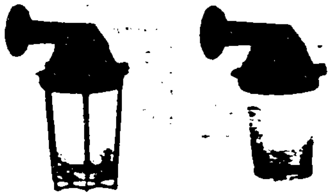	**Wall—Outlet Box Mounting** Fits SEH or VPJB cast outlet box or 3-1/4" or 4" octagonal outlet box. Furnished with screws and gasket.‡		
	60-200 Watt A-23	VPOBW10G	VPOBW10
	200-300 Watt PS-30	VPOBW20G	VPOBW20

*See page 4 for temperature limits on individual Stylmaster fixtures. †Order reflectors and accessories separately. See pages 7, 8 and 9. ‡Order SEH box from Cat. Sec. A, 3-1/4" or 4" octagonal steel boxes from Sec. OB and VPJB cast box from this catalog section.

ROCKWELL INTERNATIONAL CORP.
R[illegible] DIVISION
Approval [illegible]

A[illegible]ED	☒	[illegible]ED
AS[illegible]	☐	YES ☐ NO ☒

[illegible] NO. SOLAR ONE

D.A. Thompson
By

DEC 16 1980
Date

RECEIVED DEC 23 1980

Discount Schedule UD
Refer to Pricing Index for price, weight, and standard package

Appleton ELECTRIC COMPANY
1701 W. Wellington Ave.
Chicago, Illinois 60657

Class I, Div. 2,
Groups A,B,C,D
Class II, Div. 2,
Groups E,F,G
Class III*

UL 57 Listed

TYPE
LORD'S
A23

Stylmaster Enclosed and Gasketed Incandescent Fixtures: Stanchion and Outlet Box.

Suitable for use in Wet Locations.
With Aluminum Mounting Hood and Prismatic Glass Globe.†

R̄ TWR LTN

		Catalog Number	
	Size (Inches)	**With Globe and Guard**	**With Globe Only**
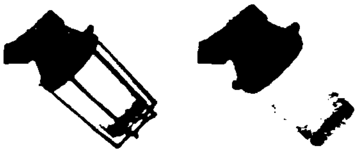	**45° Stanchion—1-1/4" Conduit**		
	60-200 Watt A-23 1-1/4	VPAN10125G	VPAN10125
	200-300 Watt PS-30 1-1/4	VPAN20125G	VPAN20125
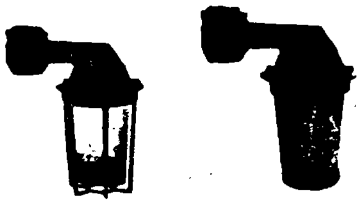	**Wall—Body includes outlet box with five tapped openings** With mounting lugs and four close-up plugs		
	60-200 Watt A-23		
	1/2	VPWB1050G	VPWB1050
	3/4	VPWB1075G	VPWB1075
	200-300 Watt PS 30		
	1/2	VPWB2050G	VPWB2050
	3/4	VPWB2075G WITH LPR-25-AN-REFLECTOR	VPWB2075
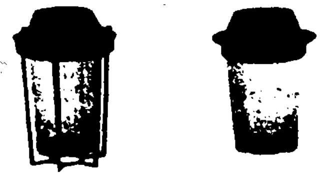	**Ceiling—Outlet Box Mounting** Fits SEH or VPJB cast outlet box or 3-1/4" or 4" octagonal outlet box. Furnished with screws and gasket.‡		
	60-200 Watt A-23	VPOB10G	VPOB10
	200-300 Watt PS-30	VPOB20G	VPOB20
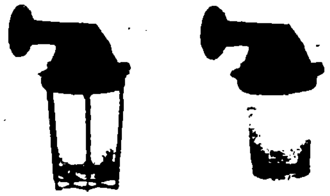	**Wall—Outlet Box Mounting** Fits SEH or VPJB cast outlet box or 3-1/4" or 4" octagonal outlet box. Furnished with screws and gasket.‡		
	60-200 Watt A-23	VPOBW10G	VPOBW10
	200-300 Watt PS-30	VPOBW20G	VPOBW20

*See page 4 for temperature limits on individual Stylmaster fixtures. †Order reflectors and accessories separately. See pages 7, 8 and 9. ‡Order SEH box from Cat. Sec. A, 3-1/4" or 4" octagonal steel boxes from Sec. OB and VPJB cast box from this catalog section.

Discount Schedule UD
Refer to Pricing Index for price, weight, and standard package

Appleton® ELECTRIC COMPANY

1701 W. Wellington Ave.
Chicago, Illinois 60657